Annual Estimates of the Population for Counties of Louisiana: April 1, 2000 to July 1, 2003						
Geographic Area	Population estimates				April 1, 2000	
	July 1, 2003	July 1, 2002	July 1, 2001	July 1, 2000	Estimates base	Census
Orleans Parish	469,032	473,089	477,988	483,567	484,674	484,674
Ouachita Parish	147,898	147,097	146,405	147,223	147,250	147,250
Plaquemines Parish	28,025	27,322	27,095	26,746	26,757	26,757
Pointe Coupee Parish	22,564	22,541	22,607	22,763	22,763	22,763
Rapides Parish	127,394	126,568	126,321	126,413	126,337	126,337
Red River Parish	9,524	9,542	9,545	9,603	9,622	9,622
Richland Parish	20,623	20,688	20,892	20,944	20,981	20,981
Sabine Parish	23,406	23,393	23,406	23,501	23,459	23,459
St. Bernard Parish	66,113	66,379	66,547	67,015	67,229	67,229
St. Charles Parish	49,353	49,097	48,501	48,196	48,072	48,072
St. Helena Parish	10,307	10,430	10,430	10,512	10,525	10,525
St. James Parish	21,118	21,251	21,254	21,194	21,195	21,216
St. John the Baptist Paris	44,816	44,135	43,696	43,139	43,044	43,044
St. Landry Parish	89,041	88,315	88,018	87,757	87,700	87,700
St. Martin Parish	49,911	49,479	49,059	48,662	48,583	48,583
St. Mary Parish	52,357	52,452	52,742	53,298	53,500	53,500
St. Tammany Parish	207,743	201,779	196,078	192,264	191,268	191,268
Tangipahoa Parish	103,591	102,414	101,624	100,816	100,588	100,588
Tensas Parish	6,247	6,422	6,490	6,583	6,618	6,618
Terrebonne Parish	106,107	105,454	104,968	104,524	104,503	104,503
Union Parish	22,966	22,812	22,900	22,778	22,803	22,803
Vermilion Parish	54,222	54,080	53,837	53,791	53,807	53,807
Vernon Parish	50,669	51,253	52,403	52,536	52,531	52,531
Washington Parish	43,947	43,813	43,842	43,902	43,926	43,926
Webster Parish	41,404	41,519	41,495	41,735	41,831	41,831
West Baton Rouge Parish	21,717	21,687	21,643	21,565	21,601	21,601
West Carroll Parish	12,236	12,167	12,112	12,293	12,314	12,314
West Feliciana Parish	15,235	15,171	15,142	15,132	15,111	15,111
Winn Parish	16,397	16,557	16,575	16,843	16,894	16,894

Note: The April 1, 2000 Population Estimates base reflects changes to the Census 2000 population from the Count Question Resolution program and geographic program revisions.

Suggested Citation:
Table 1: Annual Estimates of the Population for Counties of Louisiana: April 1, 2000 to July 1, 2003 (CO-EST2003-01-22)
Source: Population Division, U.S. Census Bureau
Release Date: April 9, 2004

Louisiana Parishes and 2000 Census Total Population (Ranked)

Rank	Parish	2000 Population	Rank	Parish	2000 Population
1	Orleans	484,674	33	Beauregard	32,986
2	Jefferson	455,466	34	Jefferson Davis	31,435
3	East Baton Rouge	412,852	35	Morehouse	31,021
4	Caddo	252,161	36	Plaquemines	26,757
5	St. Tammany	191,268	37	De Soto	25,494
6	Lafayette	190,503	38	Allen	25,440
7	Calcasieu	183,577	39	Sabine	23,459
8	Ouachita	147,250	40	Assumption	23,388
9	Rapides	126,337	41	Union	22,803
10	Terrebonne	104,503	42	Pointe Coupee	22,763
11	Tangipahoa	100,588	43	West Baton Rouge	21,601
12	Bossier	98,310	44	East Feliciana	21,360
13	Livingston	91,814	45	Franklin	21,263
14	Lafourche	89,974	46	St. James	21,216
15	St. Landry	87,700	47	Richland	20,981
16	Ascension	76,627	48	Concordia	20,247
17	Iberia	73,266	49	Grant	18,698
18	St. Bernard	67,229	50	Winn	16,894
19	Acadia	58,861	51	Claiborne	16,851
20	Vermilion	53,807	52	Bienville	15,752
21	St. Mary	53,500	53	Jackson	15,397
22	Vernon	52,531	54	West Feliciana	15,111
23	St. Martin	48,583	55	La Salle	14,282
24	St. Charles	48,072	56	Madison	13,728
25	Washington	43,926	57	West Carroll	12,314
26	St. John the Baptist	43,044	58	Catahoula	10,920
27	Lincoln	42,509	59	Caldwell	10,560
28	Webster	41,831	60	St. Helena	10,525
29	Avoyelles	41,481	61	Cameron	9,991
30	Natchitoches	39,080	62	Red River	9,622
31	Evangeline	35,434	63	East Carroll	9,421
32	Iberville	33,320	64	Tensas	6,618

Census Places and 2000 Total Population (Ranked)

Rank	Census Place	2000 Population	Rank	Census Place	2000 Population
1	New Orleans	484,674	46	Fort Polk South	11,000
2	Baton Rouge	227,818	47	Jennings	10,986
3	Shreveport	200,145	48	Westwego	10,763
4	Metairie	146,136	49	Moss Bluff	10,535
5	Lafayette	110,257	50	Mandeville	10,489
6	Lake Charles	71,757	51	Merrydale	10,427
7	Kenner	70,517	52	Raceland	10,224
8	Bossier	56,461	53	Meraux	10,192
9	Monroe	53,107	54	Harahan	9,885
10	Alexandria	46,342	55	Belle Chasse	9,848
11	Marrero	36,165	56	Claiborne	9,830
12	New Iberia	32,623	57	De Ridder	9,808
13	Houma	32,393	58	Waggaman	9,435
14	Chalmette	32,069	59	Tallulah	9,189
15	Laplace	27,684	60	Reserve	9,111
16	Slidell	25,695	61	Gardere	8,992
17	Terry	25,430	62	Denham Springs	8,757
18	Opelousas	22,860	63	Violet	8,555
19	Harvey	22,226	64	Rayne	8,552
20	Ruston	20,546	65	Covington	8,483
21	Sulphur	20,512	66	Franklin	8,354
22	Natchitoches	17,865	67	Bridge	8,323
23	Hammond	17,639	68	Gonzales	8,156
24	Gretna	17,423	69	Ville Platte	8,145
25	Shenandoah	17,070	70	Oakdale	8,137
26	Bayou Cane	17,046	71	Arabi	8,093
27	Estelle	15,880	72	Oak Hills Place	7,996
28	River Ridge	14,588	73	Scott	7,870
29	Thibodaux	14,431	74	Brownsville-Bawcomville	7,616
30	Crowley	14,225	75	Donaldsonville	7,605
31	Pineville	13,829	76	Lacombe	7,518
32	Baker	13,793	77	Galliano	7,356
33	Bogalusa	13,365	78	Larose	7,306
34	West Monroe	13,250	79	Breaux Bridge	7,281
35	Woodmere	13,058	80	Prien	7,215
36	Minden	13,027	81	Plaquemine	7,064
37	Bastrop	12,988	82	St. George	6,993
38	Morgan	12,703	83	St. Martinville	6,989
39	Abbeville	11,887	84	Leesville	6,753
40	Jefferson	11,843	85	St. Rose	6,540
41	Luling	11,512	86	Eden Isle	6,261
42	Eunice	11,499	87	Carencro	6,120
43	Timberlane	11,405	88	Jeanerette	5,997
44	Zachary	11,275	89	Red Chute	5,984
45	Destrehan	11,260	90	Schriever	5,880

Rank	Census Place	2000 Population	Rank	Census Place	2000 Population
91	Broussard	5,874	136	Norco	3,579
92	Winnfield	5,749	137	Mamou	3,566
93	Cut Off	5,635	138	South Vacherie	3,543
94	Old Jefferson	5,631	139	DeQuincy	3,398
95	Mansfield	5,582	140	Welsh	3,380
96	Marksville	5,537	141	Eastwood	3,374
97	St. Gabriel	5,514	142	Buras-Triumph	3,358
98	Avondale	5,441	143	Vinton	3,338
99	Springhill	5,439	144	Fort Polk North	3,279
100	Winnsboro	5,344	145	Pierre Part	3,239
101	Port Allen	5,278	146	Chauvin	3,229
102	Brownfields	5,222	147	Port Sulphur	3,115
103	Ponchatoula	5,180	148	Delhi	3,066
104	Kaplan	5,177	149	Gramercy	3,066
105	Patterson	5,130	150	Arcadia	3,041
106	Lake Providence	5,104	151	Lake Arthur	3,007
107	New Roads	4,966	152	Jena	2,971
108	Gray	4,958	153	Many	2,889
109	Inniswold	4,944	154	Hahnville	2,792
110	Walker	4,801	155	Haughton	2,792
111	Monticello	4,763	156	Garyville	2,775
112	Church Point	4,756	157	Haynesville	2,679
113	Grambling	4,693	158	Iowa	2,663
114	Westlake	4,668	159	Edgard	2,637
115	Bunkie	4,662	160	Lockport	2,624
116	Vidalia	4,543	161	Westminster	2,515
117	Berwick	4,418	162	Des Allemands	2,500
118	Bayou Vista	4,351	163	Baldwin	2,497
119	Elmwood	4,270	164	Jonesville	2,469
120	Swartz	4,247	165	Dulac	2,458
121	Rayville	4,234	166	Greenwood	2,458
122	Jackson	4,130	167	Amelia	2,423
123	Amite	4,110	168	New Llano	2,415
124	Carlyss	4,049	169	North Vacherie	2,411
125	Vivian	4,031	170	Sunset	2,352
126	Chackbay	4,018	171	Cottonport	2,316
127	Youngsville	3,992	172	Coushatta	2,299
128	Jonesboro	3,914	173	Port Barre	2,287
129	Poydras	3,886	174	Simmesport	2,239
130	Farmerville	3,808	175	Addis	2,238
131	Homer	3,788	176	Boothville-Venice	2,220
132	Lutcher	3,735	177	Empire	2,211
133	Ferriday	3,723	178	Kentwood	2,205
134	Ball	3,681	179	Golden Meadow	2,193
135	Franklinton	3,657	180	Erath	2,187

Rank	Census Place	2000 Population	Rank	Census Place	2000 Population
181	Boutte	2,181	226	Arnaudville	1,398
182	Oak Grove	2,174	227	Rosepine	1,390
183	Delcambre	2,168	228	Iota	1,376
184	Kinder	2,148	229	Melville	1,376
185	Jean Lafitte	2,137	230	Lecompte	1,366
186	Richwood	2,115	231	Livingston	1,342
187	Blanchard	2,050	232	St. Joseph	1,340
188	Benton	2,035	233	Livonia	1,339
189	Brusly	2,020	234	Barataria	1,333
190	Mathews	2,003	235	Cullen	1,296
191	Clinton	1,998	236	Ama	1,285
192	Cameron	1,965	237	Sterlington	1,276
193	Abita Springs	1,957	238	Maringouin	1,262
194	White Castle	1,946	239	Elton	1,261
195	Belle Rose	1,944	240	Paradis	1,252
196	Charenton	1,944	241	Sorrento	1,227
197	Oberlin	1,853	242	Krotz Springs	1,219
198	Pearl River	1,839	243	Oil	1,219
199	Labadieville	1,811	244	Boyce	1,190
200	Bernice	1,809	245	Cotton Valley	1,189
201	Montegut	1,803	246	Roseland	1,162
202	Zwolle	1,783	247	Epps	1,153
203	Bayou Gauche	1,770	248	Wisner	1,140
204	Natalbany	1,739	249	Merryville	1,126
205	Independence	1,724	250	Montz	1,120
206	St. Francisville	1,712	251	Gibsland	1,119
207	Hackberry	1,699	252	Supreme	1,119
208	Duson	1,672	253	Sibley	1,098
209	Stonewall	1,668	254	Pine Prairie	1,087
210	Basile	1,660	255	Washington	1,082
211	Ringgold	1,660	256	Woodworth	1,080
212	Colfax	1,659	257	Lydia	1,079
213	Logansport	1,630	258	Clarks	1,071
214	Gueydan	1,598	259	Plain Dealing	1,071
215	Lafitte	1,576	260	Campti	1,057
216	Mansura	1,573	261	Killian	1,053
217	New Sarpy	1,568	262	Grand Coteau	1,040
218	Glenmora	1,558	263	Slaughter	1,011
219	Grand Isle	1,541	264	Deville	1,007
220	West Ferriday	1,541	265	Leonville	1,007
221	Henderson	1,531	266	French Settlement	945
222	Cecilia	1,505	267	Loreauville	938
223	Midway	1,505	268	Fordoche	933
224	Newellton	1,482	269	Sarepta	925
225	Olla	1,417	270	Moreauville	922

Rank	Census Place	2000 Population	Rank	Census Place	2000 Population
271	Cheneyville	901	316	Grayson	531
272	Paincourtville	884	317	Folsom	525
273	Anacoco	866	318	Clarence	516
274	Albany	865	319	Richmond	499
275	Clayton	858	320	Hodge	492
276	Doyline	841	321	Columbia	477
277	Waterproof	834	322	Sun	471
278	Mooringsport	833	323	Port Vincent	463
279	Estherwood	807	324	Goldonna	457
280	Marion	806	325	Forest Hill	456
281	Ridgecrest	801	326	Sicily Island	453
282	Dubach	800	327	Kilbourne	436
283	Killona	797	328	North Hodge	436
284	Montgomery	787	329	Hornbeck	435
285	Pleasant Hill	786	330	Vienna	424
286	Morse	759	331	Dry Prong	421
287	Rosedale	753	332	Tullos	419
288	Tangipahoa	747	333	Converse	400
289	Harrisonburg	746	334	Springfield	395
290	Mermentau	721	335	Hosston	387
291	Mer Rouge	721	336	Chataignier	383
292	Provencal	708	337	Fenton	380
293	Urania	700	338	Pollock	376
294	Florien	692	339	East Hodge	366
295	Napoleonville	686	340	Cankton	362
296	Simsboro	684	341	Dodson	357
297	Madisonville	677	342	Turkey Creek	356
298	Grosse Tete	670	343	Lucky	355
299	Wilson	668	344	Dixie Inn	352
300	Morganza	659	345	South Mansfield	352
301	Junction	652	346	Varnado	342
302	Hessmer	642	347	Norwood	337
303	Maurice	642	348	Bonita	335
304	Greensburg	631	349	Collinston	327
305	Martin	625	350	Keachi	323
306	Chatham	623	351	Evergreen	314
307	Tickfaw	617	352	Rodessa	307
308	Mangham	595	353	George	301
309	Natchez	583	354	Saline	296
310	Simpson	583	355	Ashland	291
311	Choudrant	582	356	Dubberly	290
312	Elizabeth	574	357	Plaucheville	281
313	Wallace	570	358	Forest	275
314	Gilbert	561	359	Belcher	272
315	Parks	533	360	Fisher	268

Rank	Census Place	2000 Population	Rank	Census Place	2000 Population
361	Hall Summit	264			
362	Athens	262			
363	Bienville	262			
364	Noble	259			
365	Ida	258			
366	Heflin	245			
367	Angie	240			
368	Delta	239			
369	Calvin	236			
370	Montpelier	214			
371	McNary	211			
372	Castor	209			
373	Reeves	209			
374	Eros	202			
375	Grand Cane	191			
376	Edgefield	190			
377	Baskin	188			
378	Palmetto	188			
379	Robeline	183			
380	Gilliam	178			
381	Pioneer	171			
382	Quitman	168			
383	Longstreet	163			
384	Lisbon	162			
385	Shongaloo	162			
386	Spearsville	155			
387	Atlanta	150			
388	James	149			
389	Stanley	145			
390	Oak Ridge	142			
391	Powhatan	141			
392	Lillie	139			
393	Sikes	120			
394	Downsville	118			
395	Bryceland	114			
396	Mount Lebanon	73			
397	Mound	12			
398	Taft	-			

APPENDIX C

WATER WELL DATA

N
W E
S

0 3,000 6,000

SCALE: 1" = 3,000'

Legend:

- Borehole / Pilot Hole; Plugged
- Domestic
- Domestic; Abandoned
- Domestic; Plugged
- Power Generation
- Test Hole; Plugged
- Test Hole; Destroyed
- Observation; Destroyed
- Monitor; Plugged
- Other; Unknown

CLECO Power LLC

Rodemacher Power Station

LDOTD Registered Water Well Location Map

Rapides Parish, Louisiana

E·A·G·L·E ENVIRONMENTAL SERVICES, INC.

Drawn:	jbh
Checked:	JHM
Approved:	RS
Date:	09/20/06
Dwg. No.:	01-0009-C014

Figure C-1

Select Wells

Registered Water Wells

Public Works & Water Resources Division
Water Resources Section

Rapides Parish
Township 05N Range 03W
(Sorted by Section & Owners Name)

Page 1 of 1

Section	Owner Name	DOTD Well #	Owner Well #	Driller's Name	Well Depth (ft)	Well Use	Casing Size (in)	Drill Date	Water Level (ft)	W.L. Date Measured	Geologic Unit	Latitude	Longitude	Avail Info
001	BOYCE ICE CO	- 132		BLEVINS L P	302	ABANDONED	8	1932	FLOWING	00/00/32	122CRNB	312324	924022	W
001	BOYCE, LA	- 134		DEMPSEY	310	DESTROYED	8X6	1905	68.84	10/15/57	122CRNB	312326	924009	Q W
001	BOYCE, LA	- 459	4	UNKNOWN	301	PLUGGED	8	10/64	85.45	10/12/64	122CRNB	312325	924011	Q W
001	BOYCE, LA	-1092		LANFORD	296	PLUGGED	10	09/73	122	09/19/73	122CRNB	312325	924011	Q W
001	LA DOTD	- 5214Z		UNKNOWN	140	PLUGGED	2	.			122CRNB	312240	923837	
001	LA DOTD	- 5215Z		UNKNOWN	400	PLUGGED		.			122CRNB	312241	923841	
001	U S GEOL SURVEY	-1150		U.S.G.S.	99	PLUGGED		02/78			11200NWM	312335	924006	D
002	BOYCE, LA	- 760		CROOKS B M	292	PLUGGED	8X6	08/58	60	08/01/58	122CRNB	312310	924014	Q W
002	BOYCE, LA	- 767	TEST	BLEVINS L P	697	PLUGGED		08/61			11200NWM	312350	924014	ED
002	BOYCE, LA	- 771	TEST	MARTIN	735	DESTROYED	2	11/61			122CTHL	312350	924014	DMQ
002	BOYCE, LA	-1323	2	STAMM-SCHEELE	346	PLUGGED	12X12X12	05/87	140	05/27/87	122CRNB	312310	924031	EDMQ W
002	UNION PAC RR	- 133		UNKNOWN	300	DESTROYED	4	1905	3.60	07/20/38	122CRNB	312319	924017	W

LDEQ-EDMS Document 35858154, Page 110 of 417

002	VALLEY FARMERS	- 6007Z	MW-F	PETRON, INC.	15	PLUGGED	2	10/95	8.24	11/10/95	112RRVA	312330	924027	W
003	BOYCE, LA	- 651	3	HENRY, L. B.	306	PLUGGED	4	03/68	75	03/04/68	122CRNB	312309	924012	E Q W
003	BOYCE, LA	- 881	3	HENRY, L. B.	320	PUBLIC SUPPLY	12X6	02/69	112.42	02/22/72	122CRNB	312309	924012	E Q W
003	BOYCE, LA	-1093		LANFORD	316	PUBLIC SUPPLY	10X6	1974	122	00/00/74	122CRNB	312309	924012	E W
004	LA PUBLIC WORKS	-1004	TEST	UNKNOWN	608	PLUGGED		12/72			11200NWM	312305	923949	ED
004	U S GEOL SURVEY	-1156		U.S.G.S.	105	OBSERVATION	1.25	03/78	15.12	05/11/78	112RRVA	312308	923954	D Q W
005	U S GEOL SURVEY	- 684		U.S.G.S.	97	PLUGGED		05/57			11200NWM	312238	924015	D
005	U S GEOL SURVEY	- 970		U.S.G.S.	66	OBSERVATION	1.25	11/70	6.30	01/06/71	112RRVA	312222	924015	D Q W
009	LA DOTD	- 5217Z		UNKNOWN	140	PLUGGED		.			122CRNB	312248	923912	
009	MORGAN, B M	- 143		HARPER F	232	DOMESTIC	2	1936	20	00/00/36	122CRNB	312245	923913	Q W
010	LA DOTD	- 5218Z		UNKNOWN	200	PLUGGED		.			122CRNB	312246	923853	
010	LA DOTD	- 5256Z		UNKNOWN	231	PLUGGED	2	.			122CRNB	312244	923858	
011	LA DOTD	- 5216Z		UNKNOWN	130	PLUGGED		.			122CRNB	312243	923844	
011	LA DOTD	- 5219Z		UNKNOWN	250	PLUGGED		.			122CRNB	312244	923845	
011	LA DOTD	- 5255Z		UNKNOWN	236	PLUGGED	2	.			122CRNB	312244	923848	
012	GRAVES, THOMAS	- 6487Z		KNIGHT'S	244	DOMESTIC	2	04/00	67	04/29/00	122CRNB	312236	923840	D W
013	LA PUBLIC WORKS	-1053		THOMAS, DOYLE	560	PLUGGED	4X2	04/74	107.73	04/09/74	122CRNB	312239	923822	EDMQ PW
017	LA DOTD	- 5220Z		UNKNOWN	280	PLUGGED	2	.			122CRNB	312220	923720	
018	KNIGHT, LUTHER	- 140		HARPER F	330	DOMESTIC	4X2	1935			122CRNB	312511	924314	
				BARKER J										

LDEQ-EDMS Document 35858154, Page 111 of 417

020	BARKER, J E	- 450		E	490	DOMESTIC	2	07/42			122CRNB	312153	923710	Q
020	MALONE, C L	- 146		HARPER F	180	DOMESTIC	2	07/38	16	08/01/38	122CRNB	312153	923710	Q W
024	BOISE CASCADE	-1412	1	STAMM-SCHEELE	84	INDUSTRIAL	16X16	08/95	24	08/08/95	112RRVA	312406	924245	D W
024	BOYCE, LA	- 5596Z		LAYNE (MS)	705	PLUGGED		10/91			11200NWM	312415	924227	
026	BOYCE, LA	-1223	1	LAYNE (MS)	612	PUBLIC SUPPLY	10	06/92	105.4	04/25/92	122CRNB	312201	924026	EDMQ PW
026	BOYCE, LA	-1365	2	LAYNE (MS)	673	PUBLIC SUPPLY	10X6	06/92	102	03/04/92	122CRNB	312144	924018	EDM PW
027	HAYNES, H P	- 141		UNKNOWN	279	DOMESTIC	4	1938	1.37	07/23/38	122CRNB	312310	923922	W
028	LA DOTD	- 5371Z		UNKNOWN	100	PLUGGED	2	.			122CRNB	312254	923927	
029	LA DOTD	- 6050Z	OFF HWY 1	UNKNOWN	180	PLUGGED	4	.			122CRNB	312214	923729	
030	LA DOTD	- 5221Z		UNKNOWN	200	PLUGGED	2	.			122CRNB	312216	923720	
030	MITCHELL, J M	- 145		HARPER F	380	DOMESTIC	2.50	02/37	5	02/01/37	122CRNB	312205	923720	Q W
030	WHITE, WALTER	- 144		UNKNOWN	335	DOMESTIC	5	1910	5	07/21/38	122CRNB	312217	923724	Q W
037	LA PUBLIC WORKS	- 984	TEST	UNKNOWN	266	PLUGGED	4	03/72	94.44	03/30/72	122CRNB	312327	924030	EDMQ PW
037	U S GEOL SURVEY	-1163		U.S.G.S.	93	OBSERVATION	1.25	04/78	16.48	05/11/78	112RRVA	312332	924028	D Q W
038	BALL, DAN	- 130		OXENHALT	250	DOMESTIC	4	1923	8	00/00/37	122CRNB	312313	924125	Q W
038	MID STATE SAND	- 5156Z		UNKNOWN	575	PLUGGED	2	.			122CRNB	312328	924121	
038	MID STATE SAND	- 5157Z		UNKNOWN	20	PLUGGED	2	.			122CRNB	312333	924134	
038	MID STATE SAND	- 5158Z		UNKNOWN	180	PLUGGED	2	.			122CRNB	312333	924134	
038	SCOTT, A G	- 131		BLEVINS L A	350	DOMESTIC	2	1927	14	00/00/27	122CRNB	312321	924114	Q W
038	SCOTT, A G	- 302		UNKNOWN	413	ABANDONED	3	08/38	+18.05	09/02/38	122CRNB	312324	924123	D Q W
038	U S GEOL SURVEY	-1143		U.S.G.S.	96	PLUGGED		02/78			11200NWM	312305	924127	D
	U S GEOL													

LDEQ-EDMS Document 35858154, Page 112 of 417

038	SURVEY	-1149		U.S.G.S.	71	DESTROYED	1.25	02/78	23.60	05/11/78	112RRVA	312334	924120	D Q W
038	U S GEOL SURVEY	-1164		U.S.G.S.	63	DESTROYED	1.25	04/78	5.62	04/25/78	112RRVA	312228	924102	D Q W
039	LA PUBLIC WORKS	-1040	TEST	UNKNOWN	620	PLUGGED		03/74			11200NWM	312321	924140	ED
039	WOOD, O J	- 129		BLEVINS L A	419	DOMESTIC	2	1930	+18	07/19/38	122CRNB	312313	924135	Q W
040	DEWITT, JAMES	- 126		HARPER F	430	DOMESTIC	2	04/38	+18.90	07/19/38	122CRNB	312311	924222	D Q W
041	INGRAM, MAUDE	- 124		HARPER'S (KEN)	230	DOMESTIC	2	05/38	+20.88	07/19/38	122CRNB	312201	924200	D Q W
041	INGRAM, MAUDE	- 125		HARPER F	169	DOMESTIC	2	1934	+2	07/19/38	122CRNB	312242	924224	Q W
041	THOMPSON, R L	- 123		SIMMS	180	DOMESTIC	2	1934	+2.50	07/19/38	122CRNB	312236	924234	Q W
042	PARKER, CLAUDE	- 121		BLEVINS L A	320	DOMESTIC	2	1932	+3	00/00/32	122CRNB	312232	924247	W
042	PARKER, CLAUDE	- 122		BLEVINS L A	510	DOMESTIC	4	1932	+12.15	07/18/38	122CRNB	312232	924247	Q W
043	CLARK, S E	- 119		SIMPSON	167	UNKNOWN	1.50	01/36			122CRNB	312223	924300	Q
043	DEWITT, JAMES	- 118		FRANK HARPER	156	DOMESTIC	2.50	1932	+3	07/19/38	122CRNB	312216	924305	Q W
043	ODOM, PETER	- 120		SIMPSON	170	UNKNOWN	1.50	1937	+2.50	07/19/38	122CRNB	312228	924255	Q W
043	U S GEOL SURVEY	- 677		U.S.G.S.	97	PLUGGED		04/57			11200NWM	312217	924316	D
057	U S D A - S C S	- 5913Z	R964A	UNKNOWN	5	PLUGGED	0.50	.			112RRVAC	312134	924017	
057	U S D A - S C S	- 5914Z	R964B	UNKNOWN	15	PLUGGED	0.50	.			112RRVAC	312134	924017	
057	U S GEOL SURVEY	- 740		U.S.G.S.	78	DESTROYED	1.25	06/58			112RRVA	312137	924015	D Q
057	U S GEOL SURVEY	- 964		U.S.G.S.	52	OBSERVATION	1.25	01/69	3.60	02/02/70	112RRVA	312136	924015	D Q W
058	U S GEOL SURVEY	- 626		ACME PLUMB	123	PLUGGED		05/57			11200NWM	312135	924011	EDM
059	HENDERSON, H	- 142		HARPER F	447	DOMESTIC	2	11/37	1	11/01/37	122CRNB	312206	923946	Q W

LDEQ-EDMS Document 35858154, Page 113 of 417

060	BENTLEY LUMBER	- 136		UNKNOWN	175	INDUSTRIAL	2	1900			122CRNB	312456	924202	D Q
061	ARBUTHNOT SAWML	- 135		OXENHALT	210	ABANDONED	2	1919	+9.40	05/30/38	122CRNB	312431	924207	Q W
063	U S GEOL SURVEY	- 654		U.S.G.S.	63	DESTROYED	1.25	06/73	6.25	06/06/73	112RRVA	312608	924157	D Q W
080	CENTRAL LA ELEC	- 1170A	TEST#1	STAMM-SCHEELE	200	PLUGGED		01/72			122CRNB	312333	924306	ED
080	CENTRAL LA ELEC	- 1170B	TEST#2	STAMM-SCHEELE	280	PLUGGED		01/72			122CRNB	312333	924306	ED
080	CENTRAL LA ELEC	- 1170C	TEST#3	STAMM-SCHEELE	580	PLUGGED		01/72			122CTHL	312333	924306	ED
080	CENTRAL LA ELEC	-1171	1	STAMM-SCHEELE	308	POWER GEN.	8	08/72	44.25	08/23/72	122CRNB	312333	924306	EDMQ W
080	CENTRAL LA ELEC	-1220	3	STAMM-SCHEELE	298	POWER GEN.	8X4	05/83	83	05/26/83	122CRNB	312340	924306	EDM W
080	CENTRAL LA ELEC	-1228	6	MORPHIS	223	POWER GEN.	2	04/83	87	04/30/83	122CRNB	312349	924259	D Q W

Available Information:
E - Geophysical Log
D - Driller's Log
M - Mechanical Analysis
Q - Quality of Water
P - Pumping Test
W - Water Level
B - Bacteriological Analysis

[Parish Codes] [Well Use Sub-Use Codes] [Explanation of Terms]

LDEQ-EDMS Document 35858154, Page 114 of 417

TABLE 1
Summary of LDOTD Registered Water Wells Within One Mile Radius
Rodemacher Power Station
Cleco Power, L.L.C.
Boyce, Rapides Parish, Louisiana

Section/Township/ Range	DOTD Well Name	Owner Well No.	Owner	Date Completed	Well Depth	Geologic Unit	Well Use	Driller's Name	Water Level	Date Well Measured	Date Well Plugged	Well yield (gallons)	Casing Diameter (inches)	Screened Interval	Latitude	Longitude	Available Information
077,05N, 03W	- 5		THOMPSON, RICH		245	122CRNB	Domestic	THOMPSON	0.00			2			31.4075	-92.6874	Q
043, 05N, 03W	- 118		DEWITT, JAMES	1932	156	122CRNB	Domestic	FRANK HARPER	3.00	07/19/38		2.50	146-156		31.3711	-92.7180	Q W
043, 05N, 03W	- 119		CLARK, S E	01/36	167	122CRNB	Unknown	SIMPSON	0.00			1.50	162-167		31.3730	-92.7166	Q
043, 05N, 03W	- 120		ODOM, PETER	1937	170	122CRNB	Unknown	SIMPSON	2.50	07/19/38			1.50	165-170	31.3744	-92.7152	Q W
042, 05N, 03W	- 121		PARKER, CLAUDE	1932	320	122CRNB	Domestic	BLEVINS L A	3.00	00/00/32			2		31.3755	-92.7130	W
042, 05N, 03W	- 122		PARKER, CLAUDE	1932	510	122CRNB	Domestic	BLEVINS L A	12.15	07/18/38		4	4		31.3755	-92.7130	Q W
041, 05N, 03W	- 123		THOMPSON, R L	1934	180	122CRNB	Domestic	SIMMS	2.50	07/19/38		8	2	168-180	31.3766	-92.7094	Q W
041, 05N, 03W	- 125		INGRAM, MAUDE	1934	169	122CRNB	Domestic	HARPER F	2.00	07/19/38			2	149-169	31.3783	-92.7066	Q W
040, 05N, 03W	- 126		DEWITT, JAMES	04/38	430	122CRNB	Domestic	HARPER F	18.90	07/19/38		6	2	415-430	31.3863	-92.7061	D Q W
039, 05N, 03E	- 127		SEWELL, FRANK	1920	385	122CRNB	Domestic	UNKNOWN	0.00				2.50	369-385	31.3824	-92.6955	Q
039, 05N, 03W	- 129		WOOD, O J	1930	419	122CRNB	Domestic	BLEVINS L A	18.00	07/19/38		12	2	405-419	31.3869	-92.6930	Q W
038, 05N, 03W	- 130		BALL, DAN	1923	250	122CRNB	Domestic	OXENHALT	8.00	00/00/37			4		31.3869	-92.6902	Q W
038, 05N, 03W	- 131		SCOTT, A G	1927	350	122CRNB	Domestic	BLEVINS L A	14.00	00/00/27		2	2	MULTIPLE	31.3891	-92.6872	Q W
061, 05N, 03W	- 135		ARBUTHNOT SAWML	1919	210	122CRNB	Abandoned	OXENHALT	9.40	05/30/38			2		31.4086	-92.7019	Q W
060, 5N, 05W	- 136		BENTLEY LUMBER	1900	175	122CRNB	Industrial	UNKNOWN	0.00			2			31.4155	-92.7005	D Q
018, 05N, 03W	- 140		KNIGHT, LUTHER	1935	330	122CRNB	Domestic	HARPER F	0.00				4X2		31.4197	-92.7205	
038, 05N, 03W	- 302		SCOTT, A G	08/38	413	122CRNB	Abandoned	UNKNOWN	18.05	09/02/38		3	3	403-413	31.3899	-92.6897	D Q W
043, 05N, 03W	- 677		U S GEOL SURVEY	04/57	97	11200NWM	Test Hole-Abandoned	U.S.G.S.	0.00						31.3713	-92.7211	D
11904N, 03W	- 679		U S GEOL SURVEY	03/57	98	11200NWM	Test Hole-Abandoned	U.S.G.S.	0.00						31.3719	-92.7100	D
039, 05N, 03W	-1040	TEST	LA PUBLIC WORKS	03/74	620	11200NWM	Test Hole	UNKNOWN	0.00						31.3891	-92.6944	ED
040, 05N, 03W	-1041	TEST	LA PUBLIC WORKS	03/74	756	122CRNB	Test Hole-Destroyed	THOMAS, DOYLE	58.62	03/26/74		4X2	746-756	TEST	31.3724	-92.7269	EDMQ PW
038, 05N, 03W	-1143		U S GEOL SURVEY	02/78	96	11200NWM	Test Hole	U.S.G.S.	0.00						31.3847	-92.6908	D
038, 05N, 03W	-1149		U S GEOL SURVEY	02/78	71	112RRVA	Observation	U.S.G.S.	23.60	05/11/78		5	1.25	68-71	31.3927	-92.6888	D Q W
080, 05N, 03W	-1170A	TEST#1	CENTRAL LA ELEC	01/72	200	122CRNB	Abandoned	STAMM-SCHEELE	0.00		02/72			190-200	31.3924	-92.7183	ED
080, 05N, 03W	-1170B	TEST#2	CENTRAL LA ELEC	01/72	280	122CRNB	Abandoned	STAMM-SCHEELE	0.00		02/72			270-280	31.3924	-92.7183	ED
080, 05N, 03W	-1170C	TEST#3	CENTRAL LA ELEC	01/72	580	122CTHL	Abandoned	STAMM-SCHEELE	0.00		02/72			570-580	31.3924	-92.7183	ED
080, 05N, 03W	-1171	1	CENTRAL LA ELEC	08/72	308	122CRNB	Power Gen.	STAMM-SCHEELE	44.25	08/23/72			8	MULTIPLE	31.3924	-92.7183	EDMQ W
080, 05N, 04W	-1172	2	CENTRAL LA ELEC	08/74	298	122CRNB	Power Gen.	STAMM-SCHEELE	52.85	08/23/74			8	262-298	31.3930	-92.7177	DM W
080, 05N, 03W	-1220	3	CENTRAL LA ELEC	05/83	298	122CRNB	Power Gen.	STAMM-SCHEELE	83.00	05/26/83		250	8X4	269-298	31.3944	-92.7183	EDM W
080, 05N, 03W	-1228	6	CENTRAL LA ELEC	04/83	223	122CRNB	Power Gen.	MORPHIS	87.00	04/30/83		20	2	215-223	31.3969	-92.7163	D Q W
024, 05N, 03W	-1412	1	BOISE CASCADE	08/95	84	112RRVA	Industrial-Lumber	STAMM-SCHEELE	24.00	08/08/95		500	16X16	44-74	31.4016	-92.7125	D W
038, 05N, 03W	-5156Z		MID STATE SAND		575	122CRNB	Industrial-Lumber	UNKNOWN	0.00		08/86		2		31.3911	-92.6891	
038, 05N, 03W	-5157Z		MID STATE SAND		20	122CRNB	Industrial-Lumber	UNKNOWN	0.00		08/86		2		31.3924	-92.6927	
038, 05N, 03W	-5158Z		MID STATE SAND		180	122CRNB	Industrial-Lumber	UNKNOWN	0.00		08/86		2		31.3924	-92.6927	
024, 05N, 03W	-5596Z		BOYCE, LA	10/91	705	11200NWM	BPA	LAYNE (MS)	0.00		10/91				31.4041	-92.7075	
038, 05N, 04W	-6056Z	W-6	CENTRAL LA ELEC	04/82	33	122CRNB	MPA	SOIL TESTING	14.90	04/27/82	03/97		2	23-33	31.3991	-92.7258	D W

Notes:

E- Geophysical Log
D- Drillers Log
M- Mechanical Analysis
Q- Quality of Water
W- Water Level

N:\CLIENT\CLECO\Rodemacher\Documents\Solid Waste\Tables\
DOTDWells_6-14-05; Table 1

LDEQ-EDMS Document 35858154, Page 115 of 417

APPENDIX D

OPERATIONAL ENVIRONMENTAL COMPLIANCE HANDBOOK

Revised 09-21-06

CLECO POWER LLC

RODEMACHER POWER STATION

OPERATIONAL ENVIRONMENTAL COMPLIANCE PLAN

September 2006

SECTION I – INTRODUCTION

A. PURPOSE AND USE OF PLAN

The environmental permits, regulation, and agreements applicable to Rodemacher Power Station, Units 1, 2, and 3 (scheduled to be operational in 2009) contain numerous requirements and restrictions that must be met during plant operation. Compliance with these requirements and restrictions is mandatory. Under federal and state laws, failure to comply can result in fines and/or imprisonment.

This Plan is intended to help plant operations personnel comply with environmental requirements and restrictions. The Plan attempts to cover, in at least a general manner, all of the environmental requirements and restrictions that operational personnel would normally be responsible for meeting. It must be remembered that there are other environmental requirements and restrictions, which the Cleco Director of Waste & Water Quality is responsible for meeting. These requirements and restrictions are not discussed in this Plan unless operational personnel would be required to notify the Director of Waste & Water Quality of relevant circumstances. In these or other cases, the Director of Waste & Water Quality may request additional information or actions from operational personnel.

The Rodemacher Power Station is also required to comply with non-environmental requirements, such as emergency procedures and Occupational Safety and Health Act (OSHA) standards. These non-environmental requirements are covered in the individual emergency procedures maintained at the Rodemacher Power Station.

UNLESS SPECIFICALLY STATED OTHERWISE, ALL REQUIREMENTS AND RESTRICTIONS DISCUSSED IN THIS PLAN APPLY TO UNITS 1, 2 AND PROPOSED UNIT 3.

B. ORGANIZATION OF PLAN

This Plan includes the following information:

- Decision Tree Diagram outlining the actions to be taken in response to permit violations or other extraordinary events;
- Identification of any permits, regulations, or agreements that contain relevant requirements or restrictions;
- description and location of regulated facilities (such as, pollution sources that are limited by a permit and pollution control equipment used to meet the limits);
- listing of any operational restrictions and pollution limits;

B. ORGANIZATION OF PLAN (cont.)

- description of routine monitoring, inspection, and reporting requirements;
- description of emergency or noncompliance response and reporting requirements;
- description of recordkeeping requirements; and
- description of how proposed changes in plant design or operation should be handled

C. ACRONYMS AND ABBREVIATIONS USED IN PLAN

The following acronyms and abbreviations are used in this Plan:

Acronyms or Abbreviation	Meaning
Avg.	average
Ca	calcium
$CaSO_3$	calcium sulfite
$CaSO_4$	calcium sulfate
CFR	Code of Federal Regulations
Cleco	Cleco Power LLC
Cu	copper
LDEQ	Department of Environmental Quality
DMR	Discharge Monitoring Report
EPA	Environmental Protection Agency (U.S.)
Fe	ferrous (iron)
$Fe(OH)_2$	ferrous hydroxide
FGD	fuel gas desulfurization

C. ACRONYMS AND ABBREVIATIONS USED IN PLAN (cont.)

ft	foot (or feet)
ft^3	cubic foot (or feet)
gpm	gallons per minute
kg/day	kilograms per day
lb	pound (or pounds)
lb/day	pounds per day
lb/hr	pounds per hour
lb/MMBtu	pounds per million British thermal units
lb/yr	pounds per year
LEPA	Louisiana Energy and Power Authority
LPDES	Louisiana Pollution Discharge Elimination System
LPPA	Lafayette Public Power Authority
Max.	maximum
MMBtu	million British thermal units
$MMft^3/yr$	million cubic feet per year
MMgal/yr	million gallons per year
MGD	million gallons per day
Mg/d	milligrams per day
mg/l	milligrams per liter
$Mg(OH)_2$	magnesium hydroxide

C. ACRONYMS AND ABBREVIATIONS USED IN PLAN (cont.)

MSL	mean sea level
NPDES	National Pollution Discharge Elimination System
PCBs	Polychlorinated biphenyls
ppm	parts per million
PSD	Prevention of Significant Deterioration (of Air quality)
RCRA	Resource Conservation and Recovery Act
RPS	Rodemacher Power Station
SO_2	sulfur dioxide
SPCC	Spill Prevention Control and Countermeasure
TDS	Total Dissolved Solids
TSS	Total Suspended Solids
Zn	zinc
^0C	degrees Centigrade or Celsius
^0F	degrees Fahrenheit

D. REVISION OF PLAN

This Plan will be revised whenever changes to permits, regulations, or plant conditions or procedures affect information in this Plan. Revisions will be handled through change-out pages distributed by the Cleco Director of Waste & Water Quality. It is very important that any change-out pages be incorporated into the Plan promptly, so that current information will be available to plant operational personnel.

If operational personnel become aware of information in this Plan that is not current, accurate, or complete, they are requested to immediately notify the Cleco Director of Waste & Water Quality. Any questions on the Plan or on other regulatory or environmental matter can be directed to the Cleco Director of Waste & Water Quality, who may be reached during office hours at the Corporate Office.

Revised 09-21-06

RODEMACHER POWER STATION

OPERATIONAL ENVIRONMENTAL COMPLIANCE PLAN

CONTENTS | PAGE NO.

Decision Tree Diagrams for Water Pollution Events		III-A through III-C
A.	Applicable Permits and Regulations	III-1
B.	Discharge Descriptions and Locations	III-2
C.	Pollution Control Facilities	III-5
D.	Operating Restrictions	III-6
E.	Discharge Limits	III-7
F.	Monitoring Requirements	III-12
G.	Routine Reporting Requirements	III-18
H.	Noncompliance Response and Reporting Requirements	III-20
I.	Facility Inspection and Maintenance	III-28
J.	Recordkeeping Requirements	III-29
K.	Notification of Design and Operating Changes	III-30
Appendix IIIA – Procedures for the Analysis of Pollutants (40 CFR 136)		IIIA-1
Appendix IIIB – Typical Routine Monitoring Forms		IIIB-1

Revised 09-21-06

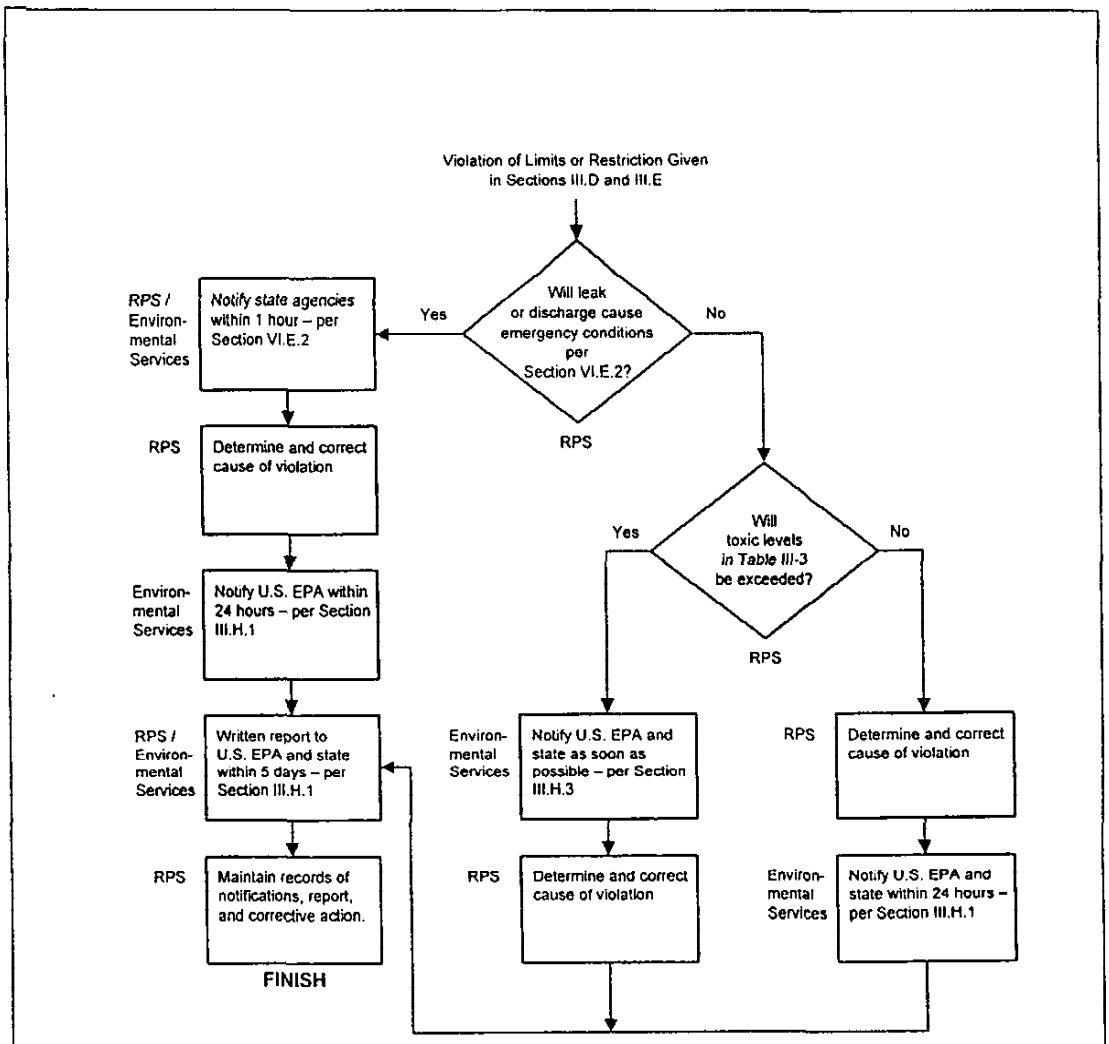

Cleco Power, L.L.C.

Rodemacher Power Station

Decision Tree for Water Noncompliance

Rapides Parish

E·A·G·L·E

Drawn:	JBH
Checked:	BL
Approved:	BL
Date:	06/08/05
Project No.:	01-0009
Drawing No.	Figure III-A

Revised 09-21-06

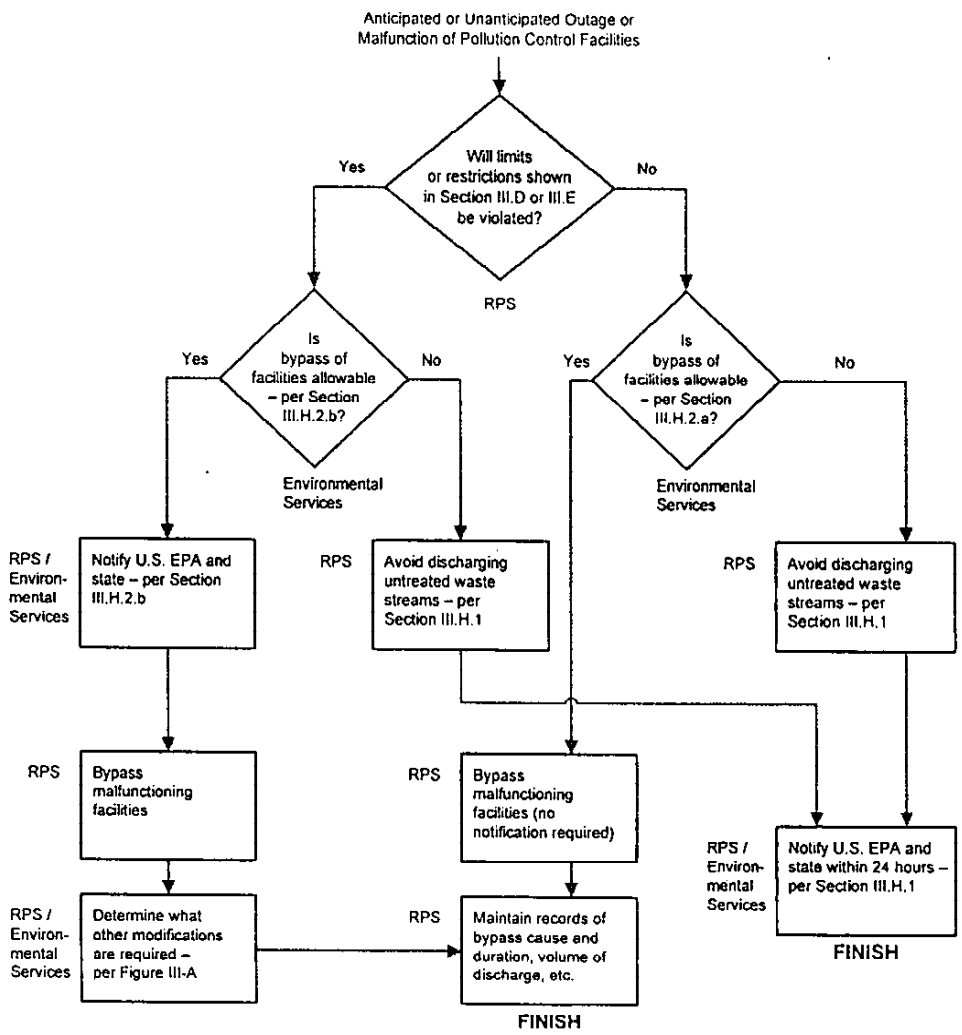

Cleco Power, L.L.C.

Rodemacher Power Station

Decision Tree for Water Facility Bypass

Rapides Parish

E·A·G·L·E

Drawn:	JEH
Checked:	BL
Approved:	BL
Date:	06/08/05
Project No.:	01-0009
Drawing No.:	Figure III-B

Revised 09-21-06

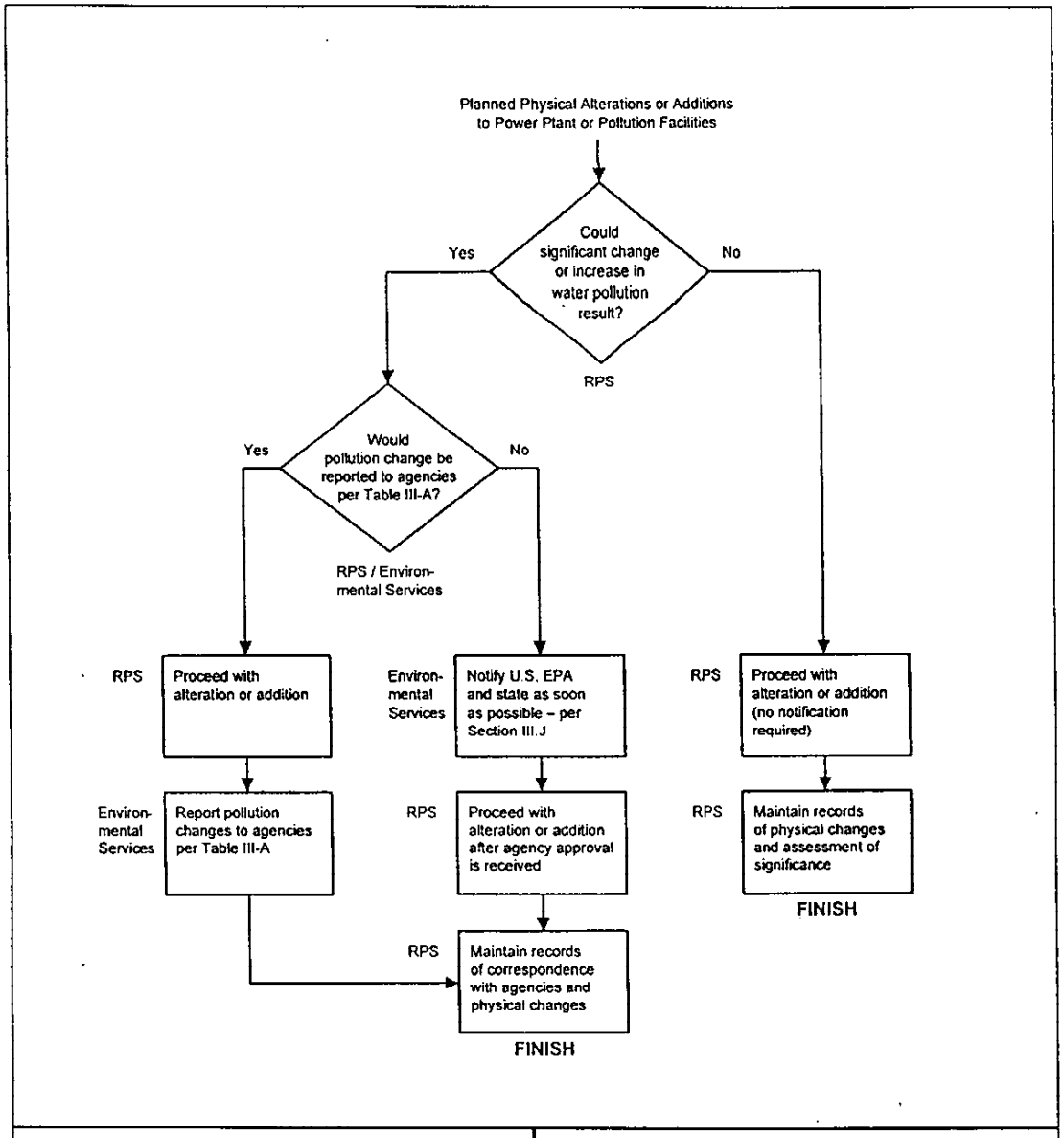

Cleco Power, L.L.C.

Rodemacher Power Station

Decision Tree for Planned Water Changes

Rapides Parish

E·A·G·L·E

Drawn:	JBH
Checked:	BL
Approved:	BL
Date:	06/08/05
Project No.:	01-0009
Drawing No.	Figure III-C

Revised 09-21-06

A. APPLICABLE PERMITS AND REGULATIONS

The Rodemacher Power Station has been granted the following permit that contains requirements applicable to water pollution discharges:

- Louisiana Pollutant Discharge Elimination System (LPDES) Permit No. LA 0008036, permit issued by the Louisiana Department of Environmental Quality, LDEQ, effective April 1, 2006.

The following regulations also have requirements applicable to water pollution discharges from the Rodemacher Power Station:

- Title 33 of the LDEQ LPDES Water Quality Regulations; Part IX – Water Quality
- 40 CFR 136 – Test Procedures for Analysis of Pollutants
- 40 CFR 423 – Effluent Limits for NPDES Discharges

Per June 29, 1976 letter from the U.S. Environmental Protection Agency, Units 1 and 2 are not subject to National Standards for Performance for new sources of pollution.

Revised 09-21-06

B. DISCHARGE DESCRIPTIONS AND LOCATIONS

The following water pollution discharges are required in the LPDES Permit for the Rodemacher Power Station.

Outfall Identification Number	Description of Effluents
001	Overflow from Lake Rodemacher
201	Coal Sedimentation Pond effluent
301	Effluent from Units 1, 2, and 3 Seal Wells
401	Bottom Ash Pond, Secondary Settling Pond, and Fly Ash Pond Effluent and Ash Management Unit Contact Stormwater Runoff and Leachate
501	Contact clarified stormwater from the petcoke/coal pile runoff and/or limestone pile runoff pond
601	Metal Cleaning Wastes – (Near Clarifier Pond)
701	Clarifier Sludge Sedimentation Pond Effluent
801	Low volume wastes including Boiler Blowdown and Drains –
901	Low volume wastes including Floor Drains and Roof Drains, Water Plant Wastes (Demineralizer regenerant and filter backwash)
101	Intermittent discharge of hydrostatic test wastewaters
111	Metal Cleaning Wastes – (Near Entrance to Facility)

Figure III-1 shows the location of these discharges on a schematic water use diagram. Figure III-2 shows the locations of these discharges on a simplified plant arrangement drawing.

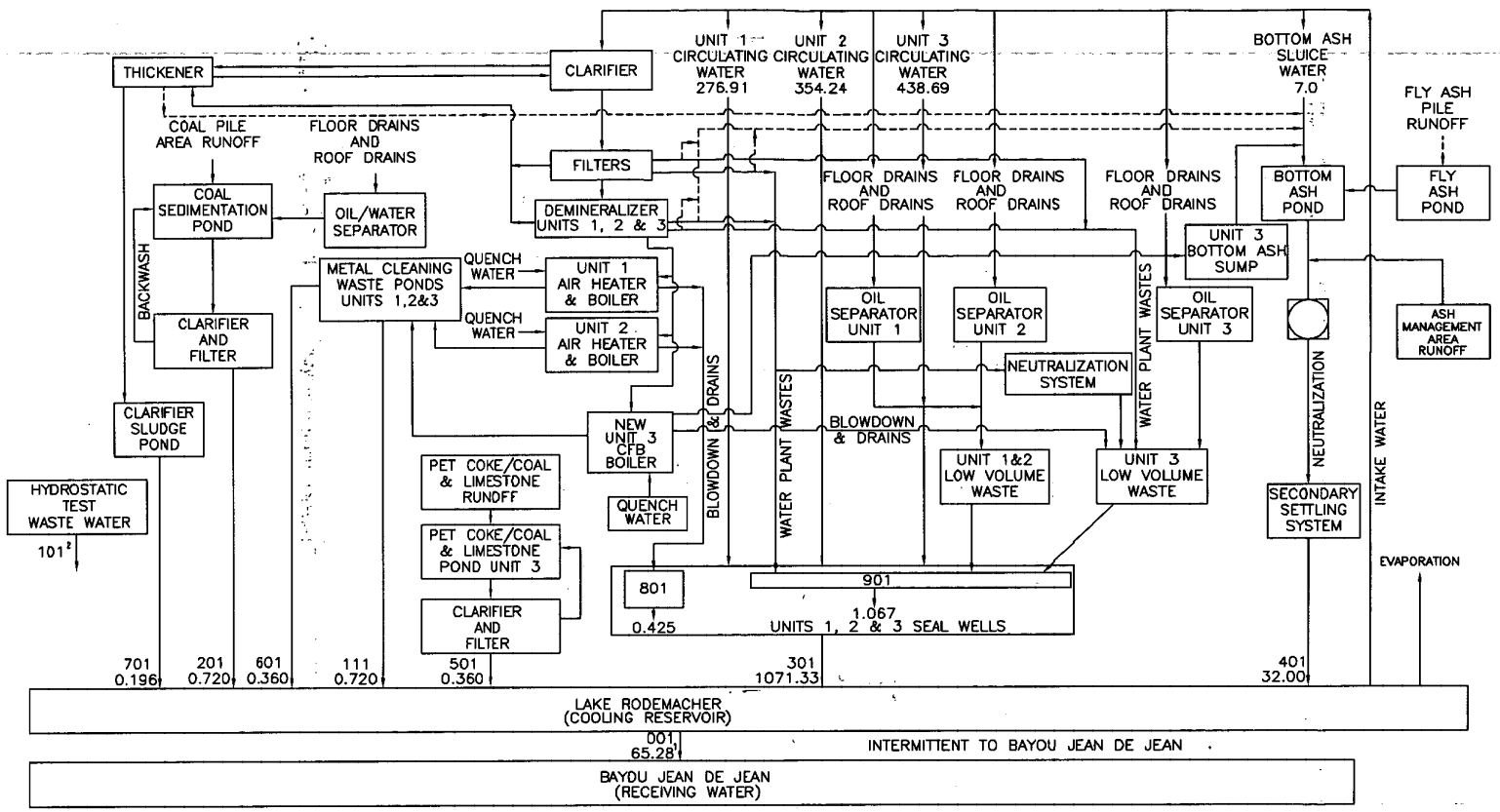

LEGEND:

- ALL FLOWS ARE IN MILLION GALLONS PER DAY
- ALTERNATE FLOW
- WATER OR WASTEWATER TREATMENT FACILITY

NOTES:

1. INTERMITTENT FLOW (LONG TERM AVERAGE) TO BAYOU JEAN DE JEAN IS ESTIMATED VALUE FROM DATA COLLECTED FOR 7/1/02 THROUGH 6/30/04
2. 101 IS THE INTERMITTENT DISCHARGE OF HYDROSTATIC TEST WATERS DISCHARGED THROUGH ANY OUTFALL.

*Drawing taken from Cleco Power, LLC drawing number CLECOR-B46, "Figure 3 – Water Balance Diagram"

CLECO Power LLC

Rodemacher Power Station

Water Balance Diagram

Rapides Parish, Louisiana

E·A·G·L·E ENVIRONMENTAL ENGINEERING, CORP.

Drawn:	tmp
Checked:	JHM
Approved:	RS
Date:	09/20/06
Dwg. No.:	01-0009-C013

Figure III-1

LDEQ-EDMS Document 35858154, Page 128 of 417

LDEQ-EDMS Document 35858154, Page 129 of 417

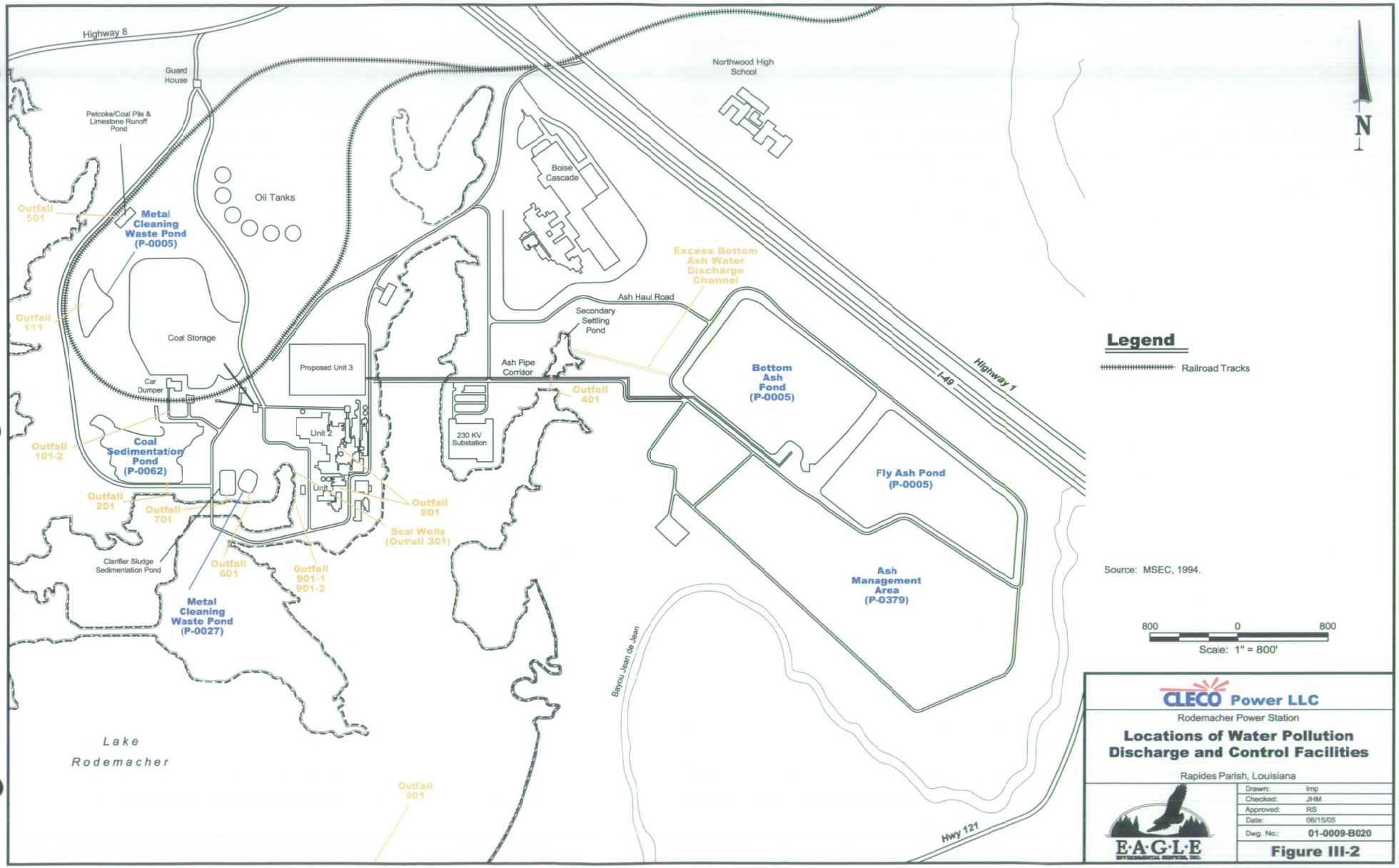

Revised 09-21-06

C. POLLUTION CONTROL FACILITIES

The Rodemacher Power Station has the following facilities for controlling water pollution discharges:

Facility	Waste Streams Treated	Treatment Provided
Lake Rodemacher	All wastewaters	Cooling, flow equalization
Coal Sedimentation Pond, with downstream clarifier and sand filter	Coal pile runoff	Settling of suspended solids, clarification, filtration
Units 1, 2, and 3 Seal Wells	Station circulating water, boiler blowdown and drains, floor drains, roof drains, water plant	Flow equalization, pH adjustment through mixing
Bottom Ash Pond And Secondary Pond	Excess bottom ash sluice water, Fly Ash Pond primary discharge	Settling of suspended solids, pH adjustment through sulfuric acid addition
Metal Cleaning Waste Ponds – Units 1, 2, and 3	Boiler chemical cleaning wastes, air heater wash water	Settling of suspended solids, pH adjustment through caustic or sulfuric acid addition (Polymer additions to settle metals)
Clarifier Sludge Sedimentation Pond	Sludge from water treatment clarifier	Settling of suspended solids
Oil Separators - Units 1, 2, and 3	Floor drains and roof drains (low volume waste)	Removal of oil
Fly Ash Pond	Fly ash runoff	Settling of suspended Solids
Petcoke/Coal pile runoff and Limestone Pond, with downstream clarifier	Petcoke/Coal and limestone runoff	Settling of suspended solids, clarification, filtration
Ash Management Area	Contact Stormwater Runoff and Leachate	Settling of suspended Solids; pH adjustment

Figure III-1 (in the previous section) shows the locations of these facilities on a schematic water use diagram. Figure III-2 (in the previous section) shows the locations of these facilities on a simplified plant arrangement drawing.

D. OPERATING RESTRICTIONS

The following general operating restrictions have been imposed on the Rodemacher Power Station by the LPDES Permit, Water discharge permit and/or federal regulations:

- All facilities and systems used to achieve compliance with the discharge limits and monitoring requirements discussed in Sections III.E and III.F of this Plan must at all times be properly operated and maintained, including appropriate quality assurance procedures.

- Any solids, sludges, filter backwash, or other pollutants removed in the course of wastewater treatment must be disposed of so that they will not enter any navigable water (such as Bayou Jean de Jean).

- No discharge may contain oil or other substances in amounts sufficient to create a visible color film on the surface of a navigable water (such as Bayou Jean de Jean).

- No discharge may contain any quantity of polychlorinated biphenyl (PCB) transformer fluid.

E. DISCHARGE LIMITS

The specific discharge limits shown in Table III-1 have been imposed on the Rodemacher Power Station by the LPDES Wastewater Discharge Permit. As can be seen, "daily average" and "daily maximum" limits are specified for most parameters. Both of these limits must be met.

The "daily average" concentration of a parameter is defined by the LPDES Permit as the arithmetic mean (weighted by flow value) of all the "daily discharges" measured for that parameter during a calendar month. The "daily maximum" is defined as the highest "daily discharge" measured during the calendar month. The "daily discharge" is defined as the arithmetic mean (weighted by flow value) of all the grab samples collected during that calendar day (or any 24-hour period that reasonably represents the calendar day), or the composite sample collected during that day. The "daily discharge" for mass is the total mass of the pollutant discharged during the sampling day.

The Coal Sedimentation Pond is designed to retain the 10-year, 24-hour rainfall, when the surface elevation of the water in the pond is lower than 101.5 feet above Mean Sea Level. As long as the level is maintained, any overflow from the pond resulting from the 10-year, 24-hour rainfall is not required to meet the limits shown in Table III-1. Monitoring of the overflow is required, as discussed in Section III.F of this Plan.

Revised 09-21-06

TABLE III-1

MAXIMUM ALLOWABLE WATER POLLUTION DISCHARGE LIMITS

Outfall	Parameter	Daily Average	Daily Maximum
001-Overflow from Lake Rodemacher	Temperature	Not applicable	100^0 F (instantaneous value)
	Dissolved Oxygen	Report	Report
	Color	Report	Report
	Total Copper	Report	Report
	Floating solids	Not applicable	Trace amounts
	Visible foam	Not applicable	Trace amounts
	Flow rate	Report	Report
201-Coal Sedimentation Pond Effluent	Total suspended solids	30 mg/l	100 mg/l
	Oil and grease	15 mg/l	20 mg/l
	pH	Instantaneous value not less than 6.0 not more than 9.0 standard pH units	
	Floating solids	Not applicable	Trace amounts
	Visible foam	Not applicable	Trace amounts
	Flow rate	Report	Report
301 – Effluent from Units 1, 2, and 3 Seal Wells	Flow	Report	Report
	pH	Instantaneous value not less than 6.0 nor more than 9.0 standard pH units	
	Total residual chlorine*	Not applicable	207 lb/day 0.2 mg/l

Revised 09-21-06

TABLE III-1 (Cont.)

Outfall	Parameter	Daily Average	Daily Maximum
R03 301 – Effluent from Units 1, 2, and 3 Seal Wells (cont.)	Floating solids	Not applicable	Trace amounts
	Visible Foam	Not applicable	Trace amounts
401 – Bottom Ash Pond, Secondary Settling Pond, and Fly Ash Pond effluent and Ash Management Area stormwater runoff and leachate	Total suspended Solids	30 mg/l	100 mg/l
	Oil and grease	15 mg/l	20 mg/l
	pH	Instantaneous value not less than 6.0 nor more than 9.0 standard units	
	Floating solids	Not applicable	Trace amounts
	Visible foam	Not applicable	Trace amounts
	Flow rate	Report	Report
	Clarifying Agents	Report	Report
501 – Petcoke/Coal pile and Limestone pile runoff	Total suspended Solids	Not applicable	50 mg/l
	pH	Instantaneous value not less than 6.0 nor more than 9.0 standard pH units	
	Floating solids	Not applicable	Trace amounts
	Visible foam	Not applicable	Trace amounts
	Flow rate	Report	Report

Revised 09-21-06

TABLE III-1 (Cont.)

Outfall	Parameter	Daily Average	Daily Maximum
601 or 111- Metal Cleaning Wastes	Total suspended solids	30 mg/l	100 mg/l
	Oil and grease	15 mg/l	20 mg/l
	pH	Instantaneous value not less than 6.0 nor more than 9.0 standard pH units	
	Total iron	1 mg/l	1 mg/l
	Total copper	1 mg/l	1 mg/l
	Floating solids	Not applicable	Trace amounts
	Visible foam	Not applicable	Trace amount
	Flow rate	Report	Report
701 – Clarifier Sludge Sedimentation Pond Effluent	Total suspended solids	30 mg/l	100 mg/l
	Oil and grease	15 mg/l	20 mg/l
	pH	Instantaneous value not less than 6.0 nor more than 9.0 standard pH units	
	Floating solids	Not applicable	Trace amounts
	Visible foam	Not applicable	Trace amounts
	Flow rate	Report	Report

* Total residual chlorine may not be discharged from any one unit for more than 2 hours per day, unless the permitting agencies agree that more frequent chlorination is required to control the growth of microinvertebrates (such as clams).

Revised 09-21-06

TABLE III-1 (Cont.)

Outfall	Parameter	Daily Average	Daily Maximum
801 – Low Volume Wastes including Boiler Blowdown and Drains	Total suspended Solids	30 mg/l	100 mg/l
	Oil and grease	15 mg/l	20 mg/l
	Floating solids	Not applicable	Trace amounts
	Visible foam	Not applicable	Trace amounts
	Flow rate	Report	Report
901 – Low Volume wastes, including Floor Drains and Water Plant Waste	Total suspended Solids	30 mg/l	100 mg/l
	Oil and grease	15 mg/l	20 mg/l
	Floating solids	Not applicable	Trace amounts
	Visible foam	Not applicable	Trace amounts
	Flow rate	Report	Report
	Clarifying Agents	Report	Report
101 – Intermittent discharge of hydrostatic test wastewaters	Total suspended Solids	Not applicable	90 mg/l
	Oil and grease	Not applicable	15 mg/l
	TOC	Not applicable	50 ug/l
	Benzene	Not applicable	50 ug/l
	Flow rate	Report	Report
	Total BTEX	Not applicable	250 ug/l
	Total Lead	Not applicable	50 ug/l
	pH	Instantaneous value not less than 6.0 nor more than 9.0 standard pH units	

F. MONITORING REQUIREMENTS

1. CONTINUOUS AND PERIODIC MONITORING

In order to demonstrate compliance with the applicable discharge limits, the LPDES Permit for the Rodemacher Power Station require either continuous or periodic monitoring of each regulated outfall. The parameters that must be monitored at each outfall, the type and frequency of the required monitoring, and the locations from which samples should be taken are summarized in Table III-2. The location of the outfalls where the monitoring must be conducted are shown on Figures III-1 and III-2 (in Section III.B).

Except for flow rate and, temperature, all parameters except total copper are monitored by laboratory analysis of manually-obtained grab samples. These grab samples are obtained by collecting the required amount of water at the discharge points or valves described in Table III-2. The sample of water is then analyzed for the required parameters using the laboratory techniques listed in 40 CFR 136 (see Appendix IIIA). Grab samples are to be obtained and analyzed by the Station Chemist for pH, total residual chlorine and dissolved oxygen. A 24-hour composite sample is obtained by the station chemist and analyzed for total copper. Analysis for other chemical parameters is performed by an outside contractor. Results are to be recorded on LPDES logs and maintained at the Rodemacher Power Station.

The flow rates for all outfalls are estimated from pump curves, process data, measured rainfall, and/or open channel flow calculations. The temperature of the overflow from Lake Rodemacher is continuously recorded upstream of the discharge to Bayou Jean de Jean. The upstream temperature is recorded to the regulatory agency as Outfall 001.

Biological toxicity monitoring occurs at the Rodemacher Lake overflow from Outfall 001. Twenty four-hour composite samples are collected by the Station Chemist at the discharge from the overflow. Testing of the effluent is performed by an outside contractor using the chronic Static Renewal 7-day Ceriodaphnia Survival Reproduction Test (Method 1002.0) and the Chronic Static Renewal 7-day Fathhead minnow Survival and Growth Test (Method 1000.0)

LDEQ-EDMS Document 35858154, Page 138 of 417

Revised 09-21-06

TABLE III-2

WATER POLLUTION DISCHARGE MONITORING REQUIREMENTS

Outfall	Parameter	Measurement Frequency	Sample Type	Sample Location
001 – Overflow from Lake Rodemacher	Flow Rate (MGD)	Once per day	Estimate	Calculated from elevation of Lake Rodemacher above discharge spillway elevation.
	Temperature (°F)	Continuous	Recorded	Automatically measured in Lake Rodemacher near the overflow spillway.
	Dissolved Oxygen	1/quarter	Grab	At the overflow from Lake
	Total Copper	1/quarter	Grab	At the overflow from Lake
	Biological Toxicity Monitoring	Once per quarter	24-hour composite	At the overflow from Lake
201- Coal Sedimentation Pond Discharge	Flow Rate (MGD)	Once per day	Estimate	Calculate from pump curves.
	Total Suspended Solids (mg/l)	2/month	Grab	Filter pipe outlet to Lake Rodemacher.
	Oil & Grease (mg/l)	2/month	Grab	Filter pipe outlet to Lake Rodemacher.
	pH (standard pH units)	2/month	Grab	Filter pipe outlet to Lake Rodemacher.

Revised 09-21-06

TABLE III-2 (Cont.)

Outfall	Parameters	Measurement Frequency	Sample Type	Sample Location
301 – Effluent from Units 1, 2 and 3 Seal Wells	Flow rate (mgd)	Once per day	Estimate	Calculated from pump curves
	Total Residual Chlorine (mg/l)*	2/month	Grab	Withdrawn from Seal Well(s)
	pH (standard pH units)	2/month	Grab	Withdrawn from Seal Well(s)
401- Bottom Ash Pond, Secondary Settling Pond, and fly Ash Pond Effluent and Ash Management Area stormwater runoff and leachate	Flow Rate (mgd)	Once per day	Estimate	Calculated from pump curves
	Total Suspended Solids (mg/l)	2/month	Grab	Pipe outlet to Lake Rodemacher.
	Oil and Grease (mg/l)	2/month	Grab	Pipe outlet to Lake Rodemacher.
	pH (std. pH units)	2/month	Grab	Pipe outlet to Lake Rodemacher.
401-Intake Lake Rodemacher Ambient water	Total Suspended Solids (mg/l)	2/month	Grab	Lake Rodemacher at water intake line from Lake Rodemacher.

Revised 09-21-06

TABLE III-2 (Cont.)

Outfall	Parameters	Measurement Frequency	Sample Type	Sample Location
501- Petcoke/coal pile and limestone pile runoff	Flow Rate (mgd)	Once per day	Estimate	Calculated from pump curves.
	Total Suspended Solids (mg/l)	2/month	Grab	Filter pipe outlet to Lake Rodemacher
	pH (standard pH units)	2/month	Grab	Filter pipe outlet to Lake Rodemacher
601 or 111- Metal Cleaning Waste Ponds – Units 1, 2 and 3**	Flow Rate (mgd)	Once per day	Estimate	Calculated from pump curves.
	Total Suspended Solids (mg/l)	Once per occurrence	Grab	Pipe outlet to Lake Rodemacher.
	Oil & Grease (mg/l)	Once per occurrence	Grab	Pipe outlet to Lake Rodemacher.
	Total Iron (mg/l)	Once per occurrence	Grab	Pipe outlet to Lake Rodemacher.
	Total Copper (mg/l)	Once per occurrence	Grab	Pipe outlet to Lake Rodemacher.
	pH (standard pH units)	Once per occurrence	Grab	Pipe outlet to Lake Rodemacher.

Revised 09-21-06

TABLE III-2 (Cont.)

Outfall	Parameters	Measurement Frequency	Sample Type	Sample Location
701 – Clarifier Sludge Sedimentation Pond Effluent **	Flow Rate (MGD)	Once per day	Estimate	Calculated from effluent spillway curves based on water level discharged from spillway.
	Total Suspended Solids (mg/l)	2/month	Grab	Spillway over dike to Lake Rodemacher.
	Oil and Grease (mg/l)	2/month	Grab	Spillway over dike to Lake Rodemacher.
	pH (standard pH units)	2/month	Grab	Spillway over dike to Lake Rodemacher.
801 – Low volume wastes including Boiler Blowdown and Drains	Flow Rate (MGD)	Once per day	Estimate	Calculated from pump curves and process flows.
	Total Suspended Solids (mg/l)	2/month	Grab	Prior to discharge to the seal wells.
	Oil and Grease (mg/l)	2/month	Grab	Prior to discharge to the seal wells.
901 – Low volume wastes including Floor Drains and Roof Drains	Flow Rate (MGD)	Once per day	Estimate	Calculated from measured rainfall and process flows.
	Total Suspended Solids (mg/l)	2/month	Grab	Underground pipe to Seal Wells.

Revised 09-21-06

TABLE III-2 (Cont.)

Outfall	Parameters	Measurement Frequency	Sample Type	Sample Location
901 – Low volume wastes – floor drains and Roof Drains (cont.)	Oil and Grease (mg/l)	2/month	Grab	Underground pipe to Seal Wells.
901 – Water Plant Waste	Flow Rate (MGD)	Once per day	Estimate	Calculated from Process Flows.
	Total Suspended Solids (mg/l)	2/month	Grab	Pipe outlet to sample box before Seal Wells.
	Oil and Grease	2/month	Grab	Pipe outlet to sample box before Seal Wells.

* Total Residual Chlorine is to be measured using the amperometric titration method described in the latest edition of "Standard Methods for the Examination of Water and Wastewater".

** Normally intermittent flow.

G. ROUTINE REPORTING REQUIREMENTS

The LPDES Permit for the Rodemacher Power Station requires the routine submittal of reports on the monitoring conducted according to Table III-2 (in Section III.F). In addition, these routine monitoring reports must include any other monitoring that is conducted using the laboratory methods listed in 40 CFR 136 (see Appendix IIIA) or approved by the Louisiana Department of Environmental Quality (LDEQ). Monitoring conducted using other laboratory methods need not be reported.

The routine monitoring reports must be prepared using a Discharge Monitoring Report (DMR) from (EPA No. 3320-1). This form is reproduced in Appendix III.

The routine monitoring reports are prepared by Cleco Environmental Specialist using flow data provided by the Operations Superintendent and data parameters provided by the Station Chemist. Typical data forms to be provided by the Operations Superintendent and Station Chemist are shown in Appendix IIIB.

The routine monitoring reports must be submitted to the regulator agencies by the 15th day of each month. In order to support this schedule, monitoring data for the preceding month must be received by the Cleco Director of Waste & Water Quality by the 10th day of each month.

The routine monitoring reports are to be prepared by the Cleco Environmental Services Group, signed by the Director of Waste & Water Quality, and submitted to the following:

Louisiana Department of Environmental Quality
Office of Environmental Compliance
Enforcement Division
Permit Compliance Unit
Post Office Box 4312
Baton Rouge, LA 70821-4312

Louisiana Department of Environmental Quality
Office of Environmental Compliance
Northeast Regional Office
1823 Hwy 546
West Monroe, LA 71292-0442

Copies of routine monitoring reports are sent to the following Cleco personnel:

Plant Manager

IN ADDITION, A REPORT ON TOTAL COPPER DISCHARGES AT OUTFALL 001 ONLY THAT EXCEED ALLOWABLE LIMITS MUST BE GIVEN VERBALLY WITHIN 24 HOURS AND IN WRITING WITHIN 5 DAYS OF THE EXCEEDANCE. THIS REQUIREMENT IS DISCUSSED IN MORE DETAIL IN SECTION III.H OF THIS PLAN.

H. NONCOMPLIANCE RESPONSE AND REPORTING REQUIREMENTS

1. MALFUNCTION OF POLLUTION CONTROL FACILITIES

The LPDES Permit for the Rodemacher Power Station requires that if pollution control facilities fail or their efficiency is reduced for any reason, measures must be taken to ensure that the restrictions and limits discussed in Sections III.D and III.E of this Plan will continue to be met. Measures that may be taken include retaining (not discharging) untreated wastes, using auxiliary treatment facilities, and stopping or reducing power plant operation. IF IT APPEARS THAT THESE OR OTHER SPECIAL MEASURES MAY BE REQUIRED, THE PLANT MANAGER SHOULD BE NOTIFIED IMMEDIATELY, SO THAT MANAGEMENT CAN DECIDE WHAT MEASURES WILL BE TAKEN.

If any of the restrictions or limits discussed in Sections III.D and III.E are not complied with as a result of a failure or malfunction, the LDEQ may need to be notified as follows:

- notified verbally within 24 hours of the noncompliance, and
- notified in writing within 5 days of the noncompliance.

IN ADDITION, FOR ANY WATER POLLUTION DISCHARGE THAT COULD REASONABLY BE EXPECTED TO CAUSE EMERGENCY CONDITIONS, NOTIFICATION MUST BE GIVEN TO THE LDEQ AND TO LA STATE POLICE AUTHORITIES WITH 1 HOUR, AS DESCRIBED IN SECTION VI.E.2 OF THIS PLAN. In general, these verbal notifications will be made by the Cleco Environmental Specialist. If the Environmental Specialists are not available, the Director of Waste & Water Quality or his designee should make the notification within the time requirement specified. Written notifications will be prepared by the Cleco Environmental Services Group and signed by the Director of Waste & Water Quality.

H. NONCOMPLIANCE RESPONSE AND REPORTING REQUIREMENTS (Cont.)

1. MALFUNCTION OF POLLUTION CONTROL FACILITIES (Cont.)

THE CHEMICAL AND ANALYTICAL SUPERVISOR SHOULD IMMEDIATELY INFORM THE CLECO DIRECTOR OF WASTE & WATER QUALITY OF ANY FAILURE OR MALFUNCTION THAT RESULTS IN NONCOMPLIANCE WITH THE RESTRICTIONS OR LIMITS DISCUSSED IN SECTIONS III.D AND III.E OF THIS PLAN. IF THE DIRECTOR OF WASTE & WATER QUALITY CANNOT BE REACHED, THE CLECO ENVIRONMENTAL SPECIALIST SHOULD BE NOTIFIED.

The information that must be provided in both verbal and written notifications is described in Section VI.E.5 of this Plan.

2. BYPASS OF POLLUTION CONTROL FACILITIES

Under the LPDES Permit for the Rodemacher Power Station, a pollution control facility can be "bypassed" (that is, waste streams can be diverted away from the control facility) if either of the following sets of condition can be met.

a. Bypass Not Causing Noncompliance

Pollution control facilities can be bypassed if both of the following conditions are met:

- the bypass does not result in noncompliance with the restrictions and limits discussed in Sections III.D and III.E of this Plan; and
- the bypass is necessary for essential maintenance to assure efficient operation.

This type of bypass requires notification to the regulatory agencies only if the bypass continues for more than 7 days. In this case, notification must be submitted with 10 working days of beginning the bypass.

H. NONCOMPLIANCE RESPONSE AND REPORTING REQUIREMENTS (Cont.)

2. BYPASS OF POLLUTION CONTROL FACILITIES (Cont.)

b. BYPASS CAUSING NONCOMPLIANCE

Pollution control facilities can be bypassed resulting in noncompliance with restrictions and/or limits if all of the following conditions are met:

- the bypass is unavoidable to prevent loss of life, personal injury, or severe physical property damage (economic loss caused by delays in production does not qualify for this condition);
- there are no feasible alternative to the bypass, such as retaining untreated wastes, using auxiliary treatment facilities, or performing maintenance during normal downtime; and
- the appropriate regulatory agencies are notified, if possible, at least 10 days before an anticipated bypass or within 24 hours of an unanticipated bypass.

THE CLECO ENVIRONMENAL SPECIALIST WILL MAKE THE NOTIFICATIONS FOR BOTH ANTICIPATED AND UNANTICIPATED BYPASSES. THE CHEMICAL AND ANALYTICAL SUPERVISOR SHOULD IMMEDIATELY INFORM THE MANAGER OF ENVIRONMENTAL SERVICES OF THE NEED FOR ANY BYPASS OF POLLUTION CONTROL FACILITIES. IF THE DIRECTOR OF WASTE & WATER QUALITY CANNOT BE REACHED, THE CLECO ENVIRONMENTAL SPECIALIST SHOULD BE NOTIFIED.

UNANTICIPATED BYPASSES THAT RESULT IN NONCOMPLIANCE WITH RESTRICTIONS AND/OR LIMITS ARE TO BE HANDLED AS DESCRIBED IN SECTION III.H.1 OF THIS PLAN.

H. NONCOMPLIANCE RESPONSE AND REPORTING REQUIREMENTS (Cont.)

3. DISCHARGES OF TOXIC POLLUTANTS

Table III-3 lists toxic pollutants that are identified in the state regulations. Under the LPDES Permit for the Rodemacher Power Station, the appropriate regulatory agencies must be notified immediately if any activity has occurred or will occur that will result in the discharge of any of the listed toxic pollutants in quantities greater than the "Notification Levels" shown in Table III-3.

THE CLECO ENVIRONMENTAL SPECIALIST WILL MAKE ANY REQUIRED NOTIFICATIONS CONCERNING TOXIC POLLUTANTS. THE CHEMICAL AND ANALYTICAL SUPERVISOR SHOULD IMMEDIATELY INFORM THE DIRECTOR OF WASTE & WATER QUALITY IF EITHER OF THE ABOVE CONDITIONS MAY BE MET. IF THE DIRECTOR OF WASTE & WATER QUALITY CANNOT BE REACHED, THE CLECO ENVIRONMENTAL SPECIALIST SHOULD BE NOTIFIED.

TABLE III-3

TOXIC POLLUTANTS REQUIRING NOTIFICATION*

Pollutant	Notification Level
Acenaphthene	0.1 mg/l
Acrolein	0.2 mg/l
Acrylonitrile	0.2 mg/l
Aldrin/Dieldrin	0.1 mg/l
Antimony and compounds	1.0 mg/l
Arsenic and compounds	0.5 mg/l
Asbestos	0.1 mg/l
Benzene	0.1 mg/l
Beryllium and compounds	0.5 mg/l
Cadmium and compounds	0.5 mg/l
Chlordane (technical mixture and metabolites)	0.1 mg/l
Chlorinated benzenes (other than dichlorobenzenes)	0.1 mg/l
Chlorinated ethanes (including 1,2-dichloroethane, and hexachloroethane)	0.1 mg/l
Chloroalkyl ethers (chloromethyl, chloroethyl, and mixed ethers)	0.1 mg/l
Chlorinated naphthalene	0.1 mg/l
Chlorinated phenols (other than those listed elsewhere; includes trichlorophenols and chlorinated cresols)	0.1 mg/l

Revised 09-21-06

TABLE III-3 (Cont.)

Pollutant	Notification Level
Chloroform	0.1 mg/l
2-chlorophenol	0.1 mg/l
Chromium and compounds	2.5 mg/l**
Copper and compounds	1.0 mg/l
Cyanides	0.1 mg/l
DDT and metabolites	0.1 mg/l
Dichlorobenzenes (1,2-, 1,3-, and 1,4-Dichlorobenzenes)	0.1 mg/l
Dichlorobenzidine	0.1 mg/l
Dichloroethylenes (1,1- and 1,2-Dichloroethylene)	0.1 mg/l
2,4-dichlorophenol	0.1 mg/l
Dichloropropane and dichloropropene	0.1 mg/l
2,4-dimethylphenol	0.1 mg/l
Dinitrotoluene	0.1 mg/l
Diphenylhydrazine	0.1 mg/l
Endosulfan and metabolites	0.1 mg/l
Endrin and metabolites	0.1 mg/l
Ethylbenzene	0.1 mg/l
Fluoranthene	0.1 mg/l
Haloethers (other than those listed elsewhere; includes chlorophenylphenyl ether, bromophenylphenyl ether, bis (dischloroisopropyl) ether, bis-chloroethoxy, methane, and polychlorinated dipheynl ethers)	0.1 mg/l

TABLE III-3 (Cont.)

Pollutant	Notification Level
Halomethanes (other than those listed elsewhere; includes methylene chloride methylchloride, methylbromide, bromoform, dichlorobromomethane, trichlorofluoromethane, dichlorodifluoromethane)	0.1 mg/l
Heptachlor and metabolites	0.1 mg/l
Hexachlorobutadiene	0.1 mg/l
Hexachlorocyclohexane (all isomers)	0.1 mg/l
Hexachlorocyclopentadiene	0.1 mg/l
Isophorone	0.1 mg/l
Lead and compounds	2.5 mg/l
Mercury and compounds	0.05 mg/l
2-methyl-4, 6-dinitrophenol	0.5 mg/l
Naphthalene	0.1 mg/l
Nickel and compounds	0.5 mg/l
Nitrobenzene	0.1 mg/l
Nitrophenols (excluding 2,4-dinitrophenol and 2-methyl-4, 6-dinitrophenol)	0.1 mg/l
Nitrosamines	0.1 mg/l
Pentachlorophenol	0.1 mg/l
Phenol	0.1 mg/l
Phthalate esters	0.1 mg/l
Polychlorinated biphenyls (PCBs)	0.1 mg/l**

TABLE III –3 (Cont.)

Pollutant	Notification Level
Polynuclear aromatic hydocarbons (indluding benzanthracenes, benzopyrenes, benzofluoranthene, chrysenes, dibenzanthracenes, and indenopyrenes)	0.1 mg/l
Selenium and compounds	0.5 mg/l
Silver and compounds	0.1 mg/l
2,3,7,8-Tetrachlorodibenzo-p dioxin (TCDD)	0.1 mg/l
Tetrachloroethylene	0.1 mg/l
Thallium and compounds	0.1 mg/l
Toluene	0.1 mg/l
Toxaphene	0.1 mg/l
Trichloroethylene	0.1 mg/l
Vinyl chloride	0.1 mg/l
Zinc and compounds	2.5 mg/l**

* The conditions under which notification must be made are discussed in Subsection III.H.3 of this Plan.

** In addition to the Notification Level shown, regulatory agencies must be notified as discussed in Subsection III.H.1 of any detectable level of chromium or zinc is discharged as a result of adding these chemicals for corrosion inhibition.

*** In addition to the Notification Level shown, regulatory agencies must be notified as discussed in Subsection III.H.1 if any PCB transformer fluid is discharged.

Revised 09-21-06

I. FACILITY INSPECTION AND MAINTENANCE

Item	Action	Notes
Inspections		
Pond - General	Visual Inspection • Weekly	Document with Weekly Inspection Checklist
Pond – Water Level	Visual Inspection • Weekly	Ensure adequate freeboard
	Survey pond depth • As necessary	Ensure design capacity is not reduced
Pond – Levee System	Survey along outer banks • As necessary	Ensure levee serves intended function (i.e., grade and slope; run-on/runoff diversion, etc.)
Levee System (Perimeter & Interior)	Visual Inspection • Weekly • After heavy rainstorms	Ensure system integrity
Equipment	Preventative Inspection • Periodic and as necessary	
Groundwater Sampling	As identified within the Groundwater Sampling & Analysis Plan	
Maintenance		
Pond	Repair, as required, based on visual inspection or any surveying that may have been conducted	Repair method to be provided by appropriate Cleco personnel
Levee System (Perimeter & Interior)	Repair, as required, based on visual inspection or any surveying that may have been conducted	Repair method to be provided by appropriate Cleco personnel
Equipment	Conduct maintenance, as required, based on preventative inspections	
Facility – vegetative growth	Remove (i.e., mow, etc.) Periodic As required (based on inspections)	Maintain to ensure integrity of facility and to maintain access by personnel and equipment

J. RECORDKEEPING REQUIREMENTS

Federal regulation and the LPDES Permit for the Rodemacher Power Station require that records must be maintained of all information resulting from required monitoring. These records must include the following types of documents:

- records of sampling and measurements;
- original strip chart recordings for continuous monitoring instrumentation;
- records of calibration and maintenance
- records of any verbal notifications to agencies described in Section III.H of this Plan; and
- copies of the written reports described in Sections III.G and III.H of this Plan.

The records of sampling and measurements must include the following information:

- the date, exact place, time, and methods of sampling of measurements;
- the individual(s) who performed the sampling or measurements;
- the date(s) laboratory analyses were performed;
- the time(s) laboratory analyses were begun and ended;
- the individual(s) who performed the laboratory analyses;
- the analytical techniques or methods used; and
- the results of such analyses;
- the results of all quality control procedures.

These records must be maintained for at least 3 years from the date on which the information is recorded. Upon request, the records must be made available to representatives of the U.S. Environmental Protection Agency or a state regulatory agency, as discussed in Section VI.E of this Plan.

The records are to be prepared by the Chemical and Analytical Section and located at the Rodemacher Power Station.

K. NOTIFICATION OF DESIGN AND OPERATING CHANGES

The LPDES Permit for the Rodemacher Power Station requires that the appropriate regulatory agencies must be notified in advance of any proposed changes of the following kind:

- physical alterations or additions that could result in a significant change in the nature or increase in the amount of pollutants discharged, if the change or increase would not require agency notification as discussed Section III.H of this Plan;
- facility changes that could result in a decrease in the amount of pollutants discharged lasting more than 180 days;
- changes in the locations at which required monitoring is conducted; or
- plans to use Lake Rodemacher as public water source or for primary contact recreation (swimming, wading, water skiing, etc.)

The agencies are to be notified of these changes "as soon as possible," and agency approval is required before implementing the changes.

THE CLECO DIRECTOR OF WASTE & WATER QUALITY WILL NOTIFY THE APPROPRIATE AGENCIES OF ANY PROPOSED CHANGES. THE CHEMICAL AND ANALYTICAL SUPERVISOR SHOULD INFORM THE DIRECTOR OF WASTE & WATER QUALITY OF ANY ANTICIPATED CHANGES OF THE KINDS LISTED ABOVE.

Revised 09-21-06

APPENDIX IIIA

PROCEDURES FOR THE ANALYSIS OF POLLUTANTS (40 CFR 136)

ENVIRONMENTAL PROTECTION AGENCY REGULATIONS ON TEST PROCEDURES FOR THE ANALYSIS OF POLLUTANTS

(40 CFR 136; 38 FR 28758, October 16, 1973; Amended by 41 FR 52780, December 1, 1976; Amended by 42 FR 3306, January 18, 1977; 42 FR 37205, July 20, 1977; 49 FR 43250, October 26, 1984; Corrected by 50 FR 691, 695, January 4, 1985; Amended by 51 FR 23692, June 30, 1986; 52 FR 33543, September 3, 1987; 55 FR 24534, June 15, 1990)

PART 136—GUIDELINES ESTABLISHING TEST PROCEDURES FOR THE ANALYSIS OF POLLUTANTS

Sec.
136.1 Applicability.
136.2 Definitions.
136.3 Identification of test procedures.
136.4 Application for alternate test procedures.
136.5 Approval of alternate test procedures.

APPENDIX A TO PART 136—METHODS FOR ORGANIC CHEMICAL ANALYSIS OF MUNICIPAL AND INDUSTRIAL WASTEWATER.
APPENDIX B TO PART 136—DEFINITION AND PROCEDURE FOR THE DETERMINATION OF THE METHOD DETECTION LIMIT—REVISION 1.11
APPENDIX C TO PART 136—INDUCTIVELY COUPLED PLASMA—ATOMIC EMISSION SPECTROMETRIC METHOD FOR TRACE ELEMENT ANALYSIS OF WATER AND WASTES METHOD 200.7

Authority: Secs. 301, 304(h), 307, and 501(a) Public Law 95-217, 91 Stat. 1566, *et seq.* (33 U.S.C. 1251 *et seq.*) (The Federal Water Pollution Control Act Amendments of 1972 as amended by the Clean Water Act of 1977).

[Amended by 55 FR 24534, June 15, 1990]

§ 136.1 Applicability.

The procedures prescribed herein shall, except as noted in § 136.5, be used to perform the measurements indicated whenever the waste constituent specified is required to be measured for:

(a) An application submitted to the Administrator, or to a State having an approved NPDES program for a permit under section 402 of the Clean Water Act of 1977, as amended (CWA), and/or to reports required to be submitted under NPDES permits or other requests for quantitative or qualitative effluent data under Parts 122 to 125 of Title 40, and.

[136.1(a) revised by 49 FR 43250, October 26, 1984]

(b) Reports required to be submitted by discharges under the NPDES established by Parts 124 and 125 of this chapter, and.

(c) Certifications issued by States pursuant to section 401 of the CWA, as amended.

[136.1(c) amended by 49 FR 43250, October 26, 1984]

§ 136.2 Definitions.

As used in this part, the term:

(a) "Act" means the Clean Water Act of 1977, Pub. L. 95-217, 91 Stat. 1566, et seq. (33 U.S.C. 1251 et seq.) (The Federal Water Pollution Control Act Amendments of 1972 as amended by the Clean Water Act of 1977).

[136.2(a) revised by 49 FR 43250, October 26, 1984]

(b) "Administrator" means the Administrator of the U.S. Environmental Protection Agency.

(c) "Regional Administrator" means one of the EPA Regional Administrators.

(d) "Director" means the Director of the State Agency authorized to carry out an approved National Pollutant Discharge Elimination System Program under section 402 of the Act.

(e) "National Pollutant Discharge Elimination System (NPDES)" means the national system for the issuance of permits under section 402 of the Act and includes any State or interstate program which has been approved by the Administrator, in whole or in part, pursuant to section 402 of the Act.

(f) "Detection limit" means the minimum concentration of an analyte (substance) that can be measured and reported with a 99% confidence that the analyte concentration is greater than zero as determined by the procedure set forth at Appendix B of this part.

(g) [Reserved]

(h) [Reserved]

[Former 136.2(f) deleted, new (f) added and (g), (h) reserved by 49 FR 43250, October 26, 1984]

§ 136.3 Identification of test procedures.

[136.3 revised by 49 FR 43250, October 26, 1984]

(a) Parameters or pollutants, for which methods are approved, are listed together with test procedure descriptions and references in Tables IA, IB, IC, ID, and IE. The full text of the referenced test procedures are incorporated by reference into Tables IA, IB, IC, ID, and IE. The references and the sources from which they are available are given in paragraph (b) of this section. These test procedures are incorporated as they exist on the day of approval and a notice of any change in these test procedures will be published in the FEDERAL REGISTER. The discharge parameter values for which reports are required must be determined by one of the standard analytical test procedures incorporated by reference and described in Tables IA, IB, IC, ID, and IE, or by any alternate test procedure which has been approved by the Administrator under the provisions of paragraph (d) of this section and §§ 136.4 and 136.5 of this Part 136. Under certain circumstances (§ 136.3 (b) or (c) or 40 CFR § 401.13) other test procedures may be used that may be more advantageous when such other test procedures have been previously approved by the Regional Administrator of the Region in which the discharge will occur, and providing the Director of the State in which such discharge will occur does not object to the use of such alternate test procedure.

TABLE 1A.—LIST OF APPROVED BIOLOGICAL TEST PROCEDURES

Parameter and units	Method [1]	EPA [2]	Reference (Method Number or Page)		
			Standard Methods 15th Ed.	ASTM	USGS
Bacteria:					
1. Coliform (fecal) number per 100 ml.	MPN, 5 tube, 3 dilution, or, membrane filter (MF)[4], single step	Page 132.	908C		
2. Coliform (fecal) in presence of chlorine number per 100 ml	MPN, 5 tube, 3 dilution; or, MF [4], single step.[5].	Page 124	909		B-0050-77
3. Coliform (fecal, number per 100 ml	MPN, 5 tube, 3 dilution, or, MF [4] single step or two step.	p. 114	908A		
		p. 109	909A		B-0025-77
4. Coliform (total) in presence of chlorine, number per 100 ml.	MPN, 5 tube, dilution, or MF [4] with enrichment.	p. 114	908A		
		p. 111	909 (A - A 5c)		
5. Fecal streptococci, number per 100 ml	MPN, 5 tube, 3 dilution, MF [4]; or, plate count.	p. 139	910A		
		p. 136	910B		B0055-77 [6]
		p. 143	910C		

Table 1A Notes

[1] The method used must be specified when results are reported.

[2] "Microbiological Methods for Monitoring the Environment, Water and Waste, 1978", EPA-600/8-78-017, U.S. Environmental Protection Agency.

[3] Greeson, P.E., *et al.*, "Methods for Collection and Analysis of Aquatic Biological and Microbiological Samples," U.S. Geological Survey, Techniques of Water-Resources Investigations, Book 5, Chapter A4, Laboratory Analysis, 1977.

[4] 0.45 μm membrane filter or other pore size certified by the manufacturer to fully retain organisms to be cultivated, and free of extractables which could interfere with their growth and development.

[5] Since the membrane filter technique usually yields low and variable recovery from chlorinated wastewaters, the MPN method will be required to resolve any controversies.

[Footnotes 1 through 4 corrected and 4A added by 50 FR 691, January 4, 1985]

[6] Approved only if discussion of the KF Streptococcus Agar (Section 5.1, USGS Method B-0055-77) is made in a boiling water bath to avoid scorching of the medium.

[Corrected by 50 FR 691, January 4, 1985]

TABLE 1B. — LIST OF APPROVED INORGANIC TEST PROCEDURES

[Table 1B corrected by 50 FR 691, 695, January 4, 1985; revised by 51 FR 23692, June 30, 1986; amended by 52 FR 33543, September 3, 1987; 55 FR 24534, June 15, 1990]

Parameter and Units	Method	Reference (Method No. or Page)				
		EPA 1979	Std. Methods 16th Ed.	ASTM	USGS[1]	Other
1. Acidity, as $CaCO_3$, mg/L	Electrometric end point or phenolphthalein end point.	305.1	402(4.a)	D1067-82(E)	—	
2. Alkalinity, as $CaCO_3$, mg/L	Electrometric or colorimetric titration to pH 4.5, manual, or	310.1	403	D1067-82(B)	I-1030-84	33.014[1]
	Automated.	310.2	—	—	I-2030-84	
3. Aluminum—Total [1], mg/L	Digestion [1] followed by:					
	AA direct aspiration	202.1	303C	—	I-3051-85	
	AA furnace	202.2	304	—	—	
	Inductively coupled plasma (ICP)	—	—	—	—	200.7[1]
	Direct current plasma (DCP), or	—	—	—	—	Note 33
	Colorimetric (Eriochrome cyanine R).	—	306B	—	—	

TABLE 1B. — LIST OF APPROVED INORGANIC TEST PROCEDURES — CONTINUED

Parameter and Units	Method	Reference (Method No. or Page)				
		EPA 1979	Std. Methods 16th Ed.	ASTM	USGS [1]	Other
4. Ammonia (as N), mg/L	Manual distillation (at pH 9.5) [1], followed by	350.2	417A	—	—	33.057 [1]
	Nesslerization,	350.2	417B	D1426-79(A)	I-3520-84	33.057 [1]
	Titration,	350.2	417D	—	—	
	Electrode,	350.3	417E or F	D1426-79(D)	—	
	Automated phenate or	350.1	417G	D1426-79(C)	I-4523-84	
	Automated electrode,	—	—	—	—	Note 6
5. Antimony—Total [1], mg/L	Digestion [1] followed by					
	AA direct aspiration,	204.1	303A	—	—	
	AA *furnace*, or	204.2	304	—	—	
	Inductively coupled plasma	—	—	—	—	200.7 [4]
6. Arsenic—Total [1], mg/L	Digestion [1] followed by	206.5	—	—	—	
	AA gaseous hydride,	206.3	303E	D2972-84(B)	I-3062-84	
	AA *furnace*,	206.2	304	—	—	
	Inductively coupled plasma, or	—	—	—	—	200.7 [4]
	Colorimetric (SDDC)	206.4	307B	D2972-84(A)	I-3060-84	
7. Barium — Total [1], mg/L	Digestion [1] followed by:					
	AA direct aspiration	208.1	303C	—	I-3084-85	
	AA furnace	208.2	304	—	—	
	ICP, or	—	—	—	—	200.7 [4]
	DCP	—	—	—	—	Note 33
8. Beryllium—Total [1], mg/L	Designation [1] followed by:					
	AA direct aspiration	210.1	303C	D3645-84(A)	I-3095-85	
	AA *furnace*	210.2	304	—	—	
	ICP	—	—	—	—	200.7 [4]
	DCP, or	—	—	—	—	Note 33
	Colorimetric (aluminon)	—	309B	—	—	
9. Biochemical oxygen demand (BOD$_5$), mg/L	Dissolved Oxygen Depletion	405.1	507	—	I-1578-78 [7]	33.019[1], p.17[7]
10. Boron—Total, mg/L	Colorimetric (curcumin)	212.3	404A	—	I-3112-85	
	ICP, or	—	—	—	—	200.7 [4]
	DCP	—	—	—	—	Note 33
11. Bromide, mg/L	Titrimetric	320.1	—	D1246-82(C)	I-1125-84	p. 544 [7]
12. Cadmium—Total [1], mg/L	Digestion [1] followed by:					
	AA direct aspiration	213.1	303A or B	D3557-84(A or B)	I-3135-85 or I-3136-85	33.089 [1], p. 37 [7]
	AA furnace	213.2	304	—	—	
	ICP	—	—	—	—	200.7 [4]
	DCP	—	—	—	—	Note 33
	Voltametry [8], or	—	—	D3557-85(C)	—	
	Colorimetric (Dithizone).	—	310B	—	—	
13. Calcium—Total 3, mg/L	Digest [1] followed by:					
	AA direct aspiration	215.1	303A	D511-84(B)	I-3152-85	
	ICP	—	—	—	—	200.7 [4]
	DCP, or	—	—	—	—	Note 33
	Titrimetric (EDTA).	215.2	311C	D511-84(A)	—	

TABLE 1B. — LIST OF APPROVED INORGANIC TEST PROCEDURES — CONTINUED

Parameter and Units	Method	Reference (Method No. or Page)				
		EPA 1979	Std. Methods 16th Ed	ASTM	USGS [1]	Other [2]
14. Carbonaceous biochemical oxygen demand (CBOD$_5$), mg/L [11]	Dissolved Oxygen Depletion with nitrification inhibitor	—	507(5.a.5)	—	—	
15. Chemical oxygen demand (COD), mg/L	Titrimetric, or,	410.1	508A	D1252-83	I-3560-80- or	33.034 [1], p.17 [1]
		410.2, or 410.3			I-3562-84	
	Spectrophotometric, manual or automated.	410.4	—	—	I-3561-84	Notes 12 or 13
16. Chloride, mg/L	Titrimetric (silver nitrate)	—	407A	D512-81(B)	1-1183-84	
	or (Mercuric nitrate), or	325.3	407B	D512-81(A)	I-1184-84	33.067 [1]
	Colorimetric, manual or	—	—	D512-81(C)	I-1187-84	
	Automated (ferricyanide).	325.1, or 325.2	407D	—	I-2187-84	
17. Chlorine—Total residual, mg/L	Titrimetric					
	Amperometric direct,	330.1	408C	D1253-76(A)	—	
	Starch end point direct,	330.3	408A	D1253-76(B)	—	
				Part 18.3		
	Back titration either end point [7], or	330.2	408B	—	—	
	DPD-FAS;	330.4	408D	—	—	
	Spectrophotometric, DPD.	330.5	408E	—	—	
	or Electrode.	—	—	—	—	Note 15
18. Chromium VI dissolved, mg/L	0.45 micron filtration followed by					
	AA Chelation-extraction,	218.4	303B	—	I-1232-84	
	or Colorimetric (Diphenylcarbazide).	—	—	—	1-1230-84	307B [1]
19. *Chromium—Total* [1], mg/L	*Digestion* [1] *followed by:*					
	AA direct aspiration	218.1	303A	D1687-84(D)	I-3236-85	33.089 [1]
	AA *chelation*—extraction	218.3	303B	—	—	
	AA furnace	218.2	304	—	—	
	ICP	—	—	—	—	200.7 [1]
	DCP, or	—	—	—	—	Note 33
	Colorimetric (Diphenylcarbazide).	—	312B	D1687-84(A)	—	
20. Cobalt—Table [1], mg/L	Digestion [1] followed by:					
	AA direct aspiration	219.1	303A or B	D3558-84(A or B)	I-3239-85 or I-3240-85b	p. 37 [1]
	AA furnace	219.2	304	—	—	200.7 [1]
	ICP	—	—	—	—	
	DCP	—	—	—	—	Note 33
21. Color, *platinum cobalt* units or dominant wavelength, hue, *luminance, purity.*	Colorimetric (ADMI), or	110.1	204D	—	—	Note 17
	(Platinum cobalt), or	110.2	204A	—	I-250-84	
	Spectrophotometric.	110.3	204B	—	—	
22. Copper—Total [1], mg/L	Digestion [1] followed by:					
	AA direct aspiration	220.1	303A or B	D1688-84(D or E) I-3271-85	I-3270-85 or	33.089 [1], p.37 [1]
	AA furnace	220.2	304	—	—	
	ICP	—	—	—	—	200.7 [1]
	DCP, or	—	—	—	—	Note 33
	Colorimetric (Neocuproine), or (Bicinchoninate).	—	313B	D1688-84(A)	—	Note 18

TABLE 1B. — LIST OF APPROVED INORGANIC TEST PROCEDURES — CONTINUED

Parameter and Units	Method	Reference (Method No. or Page) EPA 1979	Std. Methods 16th Ed.	ASTM	USGS[1]	Other
23. Cyanide-Total, mg/L	Manual distillation with $MgCl_2$ followed by	—	412B	—	—	
	Titrimetric, or	—	412C	—	—	p.22[7]
	Spectrophotometric, manual or	335.2	412D	D2036-82(A)	I-3300-84	
	Automated.[14]	335.3	—	D2036-82(A)	—	
24. Cyanide amenable to chlorination, mg/L	Manual distillation with $MgCl_2$ followed by titrimetric or spectrophotometric	335.1	412F	D2036-82(B)	—	
25. Fluoride-Total, mg/L	Manual distillation[5] followed by	—	413A	—	—	
	Electrode, manual or	340.2	413B	D1179-80(B)	—	
	Automated,	—	—	—	I-4327-84	
	Colorimetric (SPADNS), or	340.1	413C	D1179-80(A)	—	
	Automated complexone.	340.3	413E	—	—	
26. Gold-Total[4], mg/L	Digestion[3] followed by:					
	AA direct aspiration	231.2	303A	—	—	
	AA furnace, or	231.2	304	—	—	
	DCP—	—	—	—	—	Note 33
27. Hardness-Total, as CaCO, mg/L	Automated colorimetric,	130.1	—	—	—	—
	Titrimetric (EDTA), or Ca plus Mg as their carbonates, by inductively coupled plasma or AA directed aspiration. (See Parameters 13 and 33.)	130.2	314B	D1126-80	I-1338-84	33.082[7]
28 Hydrogen ion (pH), pH units	Electrometric, measurement, or	150.1	423	D1293-84(A or B)	I-1586-84	33.006[7]
	Automated electrode.	—	—	—	—	Note 20
29. Iridium-Total, mg/L	Digestion[3] followed by					
	AA direct aspiration, or	235.1	303A	—	—	
	AA furnace.	235.2	304	—	—	
30. Iron-Total[4], mg/L	Digestion[3] followed by:					
	AA direct aspiration	236.1	303A or B	D1068-84(C or D)	I-3381-85	33.089[7]
	AA furnace	236.2	304	—	—	
	ICP	—	—	—	—	200.7[8]
	DCP, or	—	—	—	—	Note 33
	Colorimetric (Phenanthroline).	—	315B	D1068-84(A)	—	Note 21
31. Kjeldahl nitrogen-Total, (as N), mg/L	Digestion and distillation followed by	351.3	420A or B	D3590-84(A)	—	
	Titration,	351.3	417D	D3590-84(A)	—	33.051[7]
	Nesslerization,	351.3	417B	D3590-84(A)	—	
	Electrode,	351.3	417E or F	—	—	
	Automated phenate,	351.1	—	—	I-4551-78[9]	
	Semi-automated block digestor, or	351.2	—	D3590-84(A)	—	
	Potentiometric,	351.4	—	D3590-84(A)	—	

TABLE 1B. — LIST OF APPROVED INORGANIC TEST PROCEDURES — CONTINUED

Parameter and Units	Method	Reference (Method No. or Page)				
		EPA 1979	Std. Methods 16th Ed.	ASTM	USGS[1]	Other
32. Lead-Total[1], mg/L	Digestion[1] followed by:					
	AA direct aspiration	239.1	303A or B	D3559-84(A or B)	I-3399-85	33.089[5]
	AA furnace	239.2	304	—	—	—
	ICP	—	—	—	—	200.7[4]
	DCP	—	—	—	—	Note 33
	Voltametry[6], or	—	—	D3559-85(C)	—	—
	Colorimetric	—	—	—	—	—
	(Dithizone).	—	316B	—	—	—
33. Magnesium-Total[1], mg/L	Digestion[1] followed by:					
	AA direct aspiration	242.1	303A	D511-84(B)	I-3447-85	33.089[5]
	ICP	—	—	—	—	200.7[4]
	DCP, or	—	—	—	—	Note 33
	Gravimetric	—	318B	D511-77(A)	—	
34. Managanese-Total[1], mg/L	Digestion[1] followed by:					
	AA direct aspiration	243.1	304A or	BD858-84(B or C)	I-3454-85	33.089[5]
	AA furance	243.2	304	—	—	
	ICP	—	—	—	—	200.7[4]
	DCP, or	—	—	—	—	Note 33
	Colorimetric (Persulfate), or	—	319B	D858-84(A)	—	33.126[5]
	(Periodate)	—	—	—	—	Note 22
35. Mercury-Total[1], mg/L	Cold vapor, manual or	245.1	303F	D3223-80	I-3462-84	33.095[5]
	Automated.	245.2	—	—	—	—
36. Molybdenum-Total[1], mg/L	Digestion[1] followed by:					
	AA direct aspiration	246.1	303C	—	I-3490-85	
	AA furnace	246.2	304	—	—	
	ICP, or	—	—	—	—	200.7[4]
	DCP	—	—	—	—	Note 33
37. Nickel-Total[1], mg/L	Digestion[1] followed by:					
	AA direct aspiration	249.1	303A or B	D1886-84(C or D)	I-3499-85	
	AA furnace	249.2	304	—	—	
	ICP	—	—	—	—	200.7[4]
	DCP,or	—	—	—	—	Note 33
	Colorimetric (Heptoxime).	—	321B	—	—	
38. Nitrate (as N), mg/L	Colorimetric (Brucine sulfate), or Nitrate-nitrite N minus Nitrite N (See parameters 39 and 40).	352.1	—	D992-71	—	33.063[5],419D[7], p.28
39. Nitrate-nitrite (as N), mg/L	Cadmium reduction, Manual or	353.3	418C	D3867-85(B)	—	—
	Automated, or	353.2	418F	D3867-85(A)	I-4545-84	
	Automated hydrazine.	353.1	—	—	—	
40. Nitrite (as N), mg/L	Spectrophotometric, Manual or	354.1	419	D1254-67	—	Note 24
	Automated (Diazotization).	—	—	—	I-4540-84	
41. Oil OR and grease-Total recoverable, mg/L	Gravimetric (extraction).	413.1	503A	—	—	

TABLE 1B. — LIST OF APPROVED INORGANIC TEST PROCEDURES — CONTINUED

Parameter and Units Otner	Method	Reference (Method No. or Page) EPA 1979	Std. Methods 16th Ed.	ASTM	USGS[1]	Other
42. Organic carbon — Total (TOC), mg/L	Combustion or oxidation.	415.1	505	D2579-85(A or B)	—	33.044[2], p.4[3]
43. Organic nitrogen (as N) mg/L	Total Kjeldahl N (Parameter 31) minus ammonia N (Parameter 4.)					
44. Orthophosphate (as P), mg/L	Ascorbic acid method.					
	Automated or	365.1	424G	—	I.4601-84	33.116[2]
	Manual single reagent.	365.2	424F	D515-82(A)	—	33.111[2]
	or Manual two reagent.	365.3	—	—	—	—
45. Osmium — Total, mg/L	Digestion followed by					
	AA direct aspiration, or	252.1	303C	—	—	
	AA furnace.	252.2	304	—	—	—
46. Oxygen, dissolved, mg/L	Winkler (Azide modification), or	360.2	421B	D888-81(C)	I-1575-78[4]	33.028[2]
	Electrode.	360.1	421F	—	I-1576-78[4]	
47. Palladium — Total, mg/L	Digestion followed by:					
	AA direct aspiration	253.1	—	—	—	p. S27[5]
	AA furnace	253.2	—	—	—	p. S28[5]
	DCP	—	—	—	—	Note 33
48. Phenis, mg/L	Manual distillation[6] follow by	420.1	—	D1783-80(A or B)	—	Note 26
	Colonmetric (4AAP) manual, or	420.1	—	—	—	Note 26
	Automated[7]	420.2	—	—	—	
49. Phosphorus (elemental) mg/L	Gas-liquid chromatography.	—	—	—	—	Note 27
50. Phosphorus — Total, mg/L	Persulfate digestion followed by	365.2	424C(III)	—	—	33.111[2]
	Manual or	365.2 or 365.3	424F	D515-82(A)	—	
	Automsied ascorbic acid reduction, or	365.1	424G	—	I-4600-84	33.116[2]
	Semi-automated block digestor.	365.4	—	—	—	
51. Platinum — Total, mg/L	Digestion followed by:					
	AA direct aspiration	255.1	303A	—	—	
	AA furnace	255.2	304	—	—	
	DCP	—	—	—	—	Note 33
52. Potassium — total[1], mg/L	Digestion followed by					
	AA direct aspiration,	258.1	303A	—	I-3630-84	33.103[2]
	Inductively coupled plasma	—	—	—	—	200.7[8]
	Flame photometric, or	—	322B	D1428-82(A)	—	
	Colorimetric (Cobaltinitrate).	—	—	—	—	317B[9]
53. Residue — Total mg/L	Gravimetric. 103-105°C.	160.3	209A	—	I-3750-84	

TABLE 1B. — LIST OF APPROVED INORGANIC TEST PROCEDURES — CONTINUED

Parameter and Units	Method	Reference (Method No. or Page)				
		EPA 1979	Std. Methods 16th Ed.	ASTM	USGS[1]	Other
54. Residue — filterable, mg/L	Gravimetric, 180°C.	160.1	209B	—	I-1750-84	
55. Residue — nonfilterable, (TSS), mg/L	Gravimetric, 103-105°C post washing of residue.	160.2	209C	—	I-3765-84	
56. Residue — settleable, mg/L	Volumetric (Imhoff-cone) or gravimetric.	160.5	209E	—	—	
57. Residue — Volatile, mg/L	Gravimetric, 550°C.	160.4	209D	—	I-3753-84	
58. Rhodium — Total[2], mg/L	Digestion[3] followed by					
	AA direct aspiration, or	265.1	303A	—	—	
	AA furnace.	265.2	304	—	—	
59. Ruthenium — Total[2], mg/L	Digestion[3] followed by					
	AA direct aspiration, or	267.1	303A	—	—	
	AA furnace.	267.2	304	—	—	
60. Selenium — Total[2], mg/L	Digestion[3] followed by					
	AA furnace.	270.2	304	—	—	
	Inductively coupled plasma, or	—	—	—	—	200.7[4]
	AA gaseous hydride.	270.3	303E	D3859-84(A)	I-3667-84	
61. Silica — Dissolved, mg/L	0.45 micron filtration followed by					
	Colorimetric, Manual or	370.1	425C	D859-80(B)	I-1700-84	
	Automated (Molybdo-silicate), or	—	—	—	I-2700-84	
	Inductively coupled plasma.	—	—	—	—	200.7[4]
62. Silver — Total[2], mg/L	Digestion[3] followed by:					
	AA direct aspiration,	272.1	303A or B	—	I-3720-85	33.089[5], p. 37[6]
	AA furnace,	272.2	304	—	—	
	Colorimetric (Dithizone)	—	—	—	—	319B[6]
	ICP, or	—	—	—	—	200.7[4]
	DCP	—	—	—	—	Note 33
63. Sodium — Total[2], mg/l	Digestion[3] followed by:					
	AA direct aspiration,	273.1	303A	—	I-3735-85	33.107[5]
	ICP	—	—	—	—	200.7[4]
	DCP, or	—	—	—	—	Note 33
	Flame photometric.	—	325B	D1428-82(A)	—	
64. Specific conductance, micromhos/cm at 25°C	Wheatstone bridge.	120.1	205	D1125-82(A)	I-1780-84	33.002[5]
65. Sulfate (as SO_4), mg/L	Automated colorimetric(barium chloranilate),	375.1	—	—	—	
	Gravimetric, or	375.3	426A or B	D516-82(A)	—	33.124[5]
	Turbidimetric.	375.4	—	D516-82(B)	—	426C[6]

TABLE 1B. — LIST OF APPROVED INORGANIC TEST PROCEDURES — CONTINUED

Parameter and Units	Method	Reference (Method No. or Page)				
		EPA 1979	Std. Methods 16th Ed.	ASTM	USGS[1]	Other
66. Sulfide (as S), mg/L	Titrimetric (iodine) or	376.1	427D	—	I-3840-84	228A [2]
	Colorimetric (methylene blue).	376.2	427C	—	—	
67. Sulfite (as SO_3), mg/L	Titrimetric (iodine-iodate.	377.1	428A	D1339-84(C)	—	
68. Surfactants, mg/L	Colorimetric (methylene blue).	425.1	512B	02330-82(A)	—	
69. Temperature, °C.	Thermometric.	170.1	212	—	—	Note 31
70. Thallium—Total [3], mg/L	Digestion [4] followed by					
	AA direct aspiration,	279.1	303A	—	—	
	AA furnace, or	279.2	304	—	—	
	inductively coupled plasma.	—	—	—	—	
71. Tin—Total [3], mg/L	Digestion [4] followed by					
	AA direct aspiration, or	282.1	303A	—	I-3850-78	
	AA furnace.	282.2	304	—	—	
72. Titanium—Total [3], mg/L	Digestion [4] followed by:					
	AA direct aspiration	283.1	303C	—	—	
	AA furnace	283.2	304	—	—	
	DCP	—	—	—	—	Note 33
73. Turbidity, NTU	Nephelometric.	180.1	214A	D1889-81	I-3860-84	
74. Vanadium, Total [3], mg/L	Digestion [4] followed by:					
	AA direct aspiration	286.1	303C	—	—	
	AA furnace	286.2	304	—	—	
	ICP	—	—	—	—	200.7 [5]
	DCP, or	—	—	—	—	Note 33
	Colorimetric (Gallic acid).	—	327B	D3373-84(A)	—	
75. Zinc—Total [3], mg/L	Digestion [4] followed by:					
	AA direct aspiration	289.1	303A or B	D1691-84(C or D)	I-3900-85	33.089 [6], p. 37 [7]
	AA furnace	289.2	304	—	—	
	ICP	—	—	—	—	200.7 [5]
	DCP, or	—	—	—	—	Note 33
	Colorimetric (Dithizone) or	—	328C	—	—	
	(Zincon).	—	—	—	—	Note 32

[1] "Methods for Analysis of Inorganic Substances in Water and Fluvial Sediments," U.S. Department of the Interior, U.S. Geological Survey, Open File Report 85-495, 1986, unless otherwise stated.

[2] "Official Methods of Analysis of the Association Analytical Chemists," methods manual, 14th ed. (1985).

[3] For the determination of total metals the sample is not filtered before processing. A digestion procedure is required to solubilize suspended material and to destroy possible organic-metal complexes. Two digestion procedures are given in "Methods for Chemical Analysis of Water and Wastes, 1979." One (section 4.1.3) is a vigorous digestion using nitric acid. A less vigorous digestion using nitric and hydrochloric acids (section 4.1.4) is preferred; however, the analyst should be cautioned that this mild digestion may not suffice for all sample types. Particularly, if a colorimetric procedure is to be employed, it is necessary to ensure that all organo-metallic bonds be broken so that the metal is in a reactive state. In those situations, the vigorous digestion is to be preferred making certain that at no time does the sample go to dryness. Samples containing large amounts of organic materials would also benefit by this vigorous digestion. Use of the graphite furnace technique, inductively coupled plasma, as well as determinations for certain elements such as arsenic, the noble metals, mercury, selenium, and titanium require a modified digestion and in all cases the method write-up should be consulted for specific instruction and/or cautions.

NOTE: *If the digestion included in one of the other approved references is different than the above, the EPA procedure must be used.*

Dissolved metals are defined as those constituents which will pass through a 0.45 micron membrane filter. Following filtration of the sample, the referenced procedure for total metals must be followed. Sample digestion for dissolved metals may be omitted for AA (direct aspiration or graphite furnace) and ICP analyses provided the sample solution to be analyzed meets the following criteria:

a. has a low COD (<20)
b. is visibly transparent with a turbidity measurement of 1 NTU or less.
c. is colorless with no perceptible odor, and
d. is of one liquid phase and free of particulate or suspended matter following acidification.

[4] The full text of Method 200.7, "Inductively-Coupled Plasma Atomic Emission Spectrometric Method for Trace Element Analysis of Water and Wastes," is given at Appendix C of this Part 136.

[5] Manual distillation is not required if comparability data on representative effluent samples are on company file to show that this preliminary distillation step is not necessary; however, manual distillation will be required to resolve any controversies.

[6] Ammonia, Automated Electrode Method, Industrial Method Number 379-75 WE, dated February 19, 1976. Technicon AutoAnalyzer II, Technicon Industrial Systems, Tarrytwon, NY, 10591.

[7] The approved method is that cited in "Methods for Determination of Inorganic Substances in Water and Fluvial Sediments, "USGS TWRI, Book 5, Chapter A1 (1979).

[8] American National Standard n Photographic Processing, Effluents, Apr: 2, 1975. Available from ANSI, 1430 Broadway, New York, NY 10018.

[9] Selected Analytical Methods Approved and Cited by the Untied States Environmental Protection Agency." Supplement to the Fifteenth Edition of Standard Methods for the Examination of Water and Wsatewater (1981).

[10] The use of normal and differential pulse voltage ramps to increase sensitivity and resolution is acceptable.

[11] Carbonaceous biochemical oxygen demand ($CBOD_5$) must not be confused with the traditional BOD_5 test which measures "total BOD." The addition of the nitrification inhibitor is not a procedural option, but must be included to report the $CBOD_5$ parameter. A discharger whose permit requires reporting the traditional BOD_5 may not use a nitrification inhibitor in the procedure for reporting the results. Only when a discharger's permit specifically states $CBOD_5$ is required, can the permittee report data using the nitrification inhibitor.

[12] OIC Chemical Oxygen Demand Method, Oceanography International Corporation, 512 West Loop, P.O. Box 2980, College Station, TX 77840.

[13] Chemical Oxygen Demand, Method 8000, Hach Handbook of Water Analysis, 1979, Hach Chemical Company, P.O. Box 389, Loveland, CO 80537.

[14] The back titration method will be used to resolve controversy.

[15] Orion Research Instruction Manual, Residual Chlorine Electrode Model 97-70, 1977, Orion Research Incorporated, 840 Memorial Drive, Cambridge, MA 02138.

[16] The approved method is that cited in *Standard Methods for the Examination of Water and Wastewater*, 14th Edition, 1976.

[17] National Council of the Paper Industry for Air and Stream Improvement, (Inc.) Technical Bulletin 253, December 1971.

[18] Copper, Biocinchoinate Method, Method 8506, Hach Handbook of Water Analysis, 1979, Hach Chemical Company, P.O. Box 389, Loveland, CO 80537.

[19] After the manual distillation is completed, the autoanalyzer manifolds in EPA Methods 335.3 (cyanide) or 420.2 (phenols) are simplified by connecting re-sample line directly to the sampler. When using the manifold setup shown in Method 335.3, the buffer 6.2 should be replaced with the buffer 7.6 found in method 335.2.

[20] Hydrogen ion (pH) Automated Electrode Method, Industrial Method Number 378-75WA, October 1976, Technicon Auto-Analyzer II, Technicon Industrial Systems, Tarrytown, NY 10591.

[21] Iron, 1,10-Phenanthroline Method, Method 8008, 1980, Hach Chemical Company, P.O. Box 389, Loveland, CO 80537.

[22] Manganese, Periodate Oxidation Method, Method 8034, Hach Handbook of Wastewater Analysis, 1979, pages 2-113 and 2-117, Hach Chemical Company, Loveland, CO 80537.

[23] Goerlitz, D., Brown E., "Methods for Analysis of Organic Substances in Water," U.S. Geological Survey Techniques of Water-Resources Inv., book 5, ch. A3, page 4 (1972).

[24] Nitrogen, Nitrite, Method 8507, Hach Chemical Company, P.O. Box 389, Loveland, CO 80537.

[25] Just prior to distillation, adjust the sulfuric-acid-preserved sample to pH 4 with 1 + 9 NaOH.

[26] The approved method is that cited in *Standard Methods for the Examination of Water and Wastewater*, 14th Edition. The colorimetric reaction is conducted at pH of 10.0±0.2. The approved methods are given on pp. 576-81 of the 14th Edition: Method 510A for distillation, Method 510B for the manual colorimetric procedure, or Method 510C for the manual spectrophotometric procedure.

[27] R. F. Addison and R. G. Ackman, "Direct Determination of Elemental Phosphorus by Gas-Liquid Chromatography," *Journal of Chromatography*, vol. 47, No. 3, pp. 421-426, 1970.

[28] Approved methods for the analysis of silver in industrial wastewaters at concentrations of 1 mg/L and above are inadequate where silver exists as an inorganic halide. Silver halides such as the bromide and chloride are relatively insoluble in reagents such as nitric acid but re readily soluble in an aqueous buffer of sodium thiosulfate and sodium hydroxide to a pH of 12. Therefore, for levels of silver above 1 mg/L, 20 mL of sample should be diluted to 100 mL by adding 40 mL each of 2 M $Na_2S_2O_3$ and 2 M NaOH. Standards should be prepared in the same manner. For levels of silver below 1 mg/L the approved method is satisfactory.

[29] The approved method is that cited in *Standard Methods for the Examination of Water and Wastewater*, 15th Edition.

[30] The approved method is that cited in *Standard Methods for the Examination of Water and Wastewater*, 13th Edition.

[31] Stevens, H.H., Ficke J. F., and Smoot, G. F., "Water Temperature — Influential Factors, Field Measurement and Data Presentation," U.S. Geological Survey, Techniques of Water Resources Investigations, Book 1, Chapter D1, 1975.

[32] Zinc, Zincon Method, Method 8009, Hach Handbook of Water Analysis, 1979, pages 2-231 and 2-233, Hach Chemical Company, Loveland CO 80537.

[33] Direct Current Plasma (DCP) Optical Emission Spectrometric Method for Trace Elemental Analysis of Water and Wastes, Method AES0029," 1986. Applied Research Laboratories, Inc., 24911 Avenue Stanford, Valencia, CA 91355.

[Footnote 33 added by 52 FR 33543, September 3, 1987; amended by 55 FR 24534, June 15, 1990]

TABLE IC.—LIST OF APPROVED TEST PROCEDURES FOR NON-PESTICIDE ORGANIC COMPOUNDS

(Table IC corrected by 50 FR 691, 695, January 4, 1985)

Parameter [1]	EPA Method Number [2,3]			Other
	GC	GC/MS	HPLC	
1. Acenaphthene	610	625, 1625	610	
2. Acenaphthylene	610	625, 1625	610	
3. Acrolein	603	624, 1624		
4. Acrylonitrile	603	624, 1624		
5. Anthracene	610	625, 1625	610	
6. Benzene	602	624, 1624		
7. Benzidine		625, 1625	605	Note 3, p. 1;
8. Benzo(a)anthracene	610	625, 1625	610	
9. Benzo(a)pyrene	610	625, 1625	610	
10. Benzo(b)fluoranthene	610	625, 1625	610	
11. Benzo(g, h, i)perylene	610	625, 1625	610	
12. Benzo(k)fluoranthene	610	625, 1625	610	
13. Benzyl chloride				Note 3, p. 130; Note 8, p. 8102.
14. Benzyl butyl phthalate	606	625, 1625		
15. Bis(2-chloroethoxy) methane	611	625, 1625		
16. Bis(2-chloroethyl) ether	611	625, 1625		
17. Bis(2-ethylhexyl) phthalate	606	625, 1625		
18. Bromodichloromethane	601	624, 1624		
19. Bromoform	601	624, 1624		
20. Bromomethane	601	624, 1624		
21. 4-Bromophenylphenyl ether	611	625, 1625		
22. Carbon tetrachloride	601	624, 1624		Note 3, p. 130;
23. 4-Chloro-3-methylphenol	604	625, 1625		
24. Chlorobenzene	601, 602	624, 1624		Note 3, p. 130;
25. Chloroethane	601	624, 1624		
26. 2-Chloroethylvinyl ether	601	624, 1624		
27. Chloroform	601	624, 1624		Note 3, p. 130;
28. Chloromethane	601	624, 1624		
29. 2-Chloronaphthalene	612	625, 1625		
30. 2-Chlorophenol	604	625, 1625		
31. 4-Chlorophenylphenyl ether	611	625, 1625		
32. Chrysene	610	625, 1625	610	
33. Dibenzo(a,h)anthracene	610	625, 1625	610	
34. Dibromochloromethane	601	624, 1624		
35. 1,2-Dichlorobenzene	601, 602, 612	624, 625, 1625		
36. 1,3-Dichlorobenzene	601, 602, 612	624, 625, 1625		
37. 1,4-Dichlorobenzene	601, 602, 612	625, 1624, 1625		
38. 3,3'-Dichlorobenzidine		625, 1625	605	
39. Dichlorodifluoromethane	601			
40. 1,1-Dichloroethane	601	624, 1624		
41. 1,2-Dichloroethane	601	624, 1624		
42. 1,1-Dichloroethene	601	624, 1624		
43. trans-1,2-Dichloroethene	601	624, 1624		
44. 2,4-Dichlorophenol	604	625, 1625		
45. 1,2-Dichloropropane	601	624, 1624		
46. cis-1,3-Dichloropropene	601	624, 1624		
47. trans-1,3-Dichloropropene	601	624, 1624		
48. Diethyl phthalate	606	625, 1625		
49. 2,4-Dimethylphenol	604	625, 1625		
50. Dimethyl phthalate	606	625, 1625		
51. Di-n-butyl phthalate	606	625, 1625		
52. Di-n-octyl phthalate	606	625, 1625		
53. 2,4-Dinitrophenol	604	625, 1625		
54. 2,4-Dinitrotoluene	609	625, 1625		
55. 2,6-Dinitrotoluene	609	625, 1625		
56. Epichlorohydrin				Note 3, p. 130; Note 8, p. 8102.
57. Ethylbenzene	602	624, 1624		
58. Fluoranthene	610	625, 1625	610	
59. Fluorene	610	625, 1625	610	
60. Hexachlorobenzene	612	625, 1625		
61. Hexachlorobutadiene	612	625, 1625		
62. Hexachlorocyclopentadiene	612	625, 1625		
63. Hexachloroethane	612	625, 1625		
64. Indeno(1,2,3-cd)pyrene	610	625, 1625	610	
65. Isophorone	609	625, 1625		
66. Methylene chloride	601	624, 1624		Note 3, p. 130;
67. 2-Methyl-4,6-dinitrophenol	604	625, 1625		
68. Naphthalene	610	625, 1625	610	
69. Nitrobenzene	609	625, 1625		
70. 2-Nitrophenol	604	625, 1625		
71. 4-Nitrophenol	604	625, 1625		
72. N-Nitrosodimethylamine	607	625, 1625		

TABLE IC.—LIST OF APPROVED TEST PROCEDURES FOR NON-PESTICIDE ORGANIC COMPOUNDS—Continued

Parameter [1]	EPA Method Number [2,3]			Other
	GC	GC/MS	HPLC	
73. N-Nitroso-di-n-propylamine	607	[4]625, 1625		
74. N-Nitrosodiphenylamine	607	[4]625, 1625		
75. 2,2'-oxybis(1-chloropropane)	611	625, 1625		
76. PCB-1016	608	625		Note 3, p. 43;
77. PCB-1221	608	625		Note 3, p. 43;
78. PCB-1232	608	625		Note 3, p. 43;
79. PCB-1242	608	625		Note 3, p. 43;
80. PCB-1248	608	625		Note 3, p. 43;
81. PCB-1254	608	625		Note 3, p. 43;
82. PCB-1260	608	625		Note 3, p. 43;
83. Pentachlorophenol	604	625, 1625		Note 3, p. 140;
84. Phenanthrene	610	625, 1625	610	
85. Phenol	604	625, 1625		
86. Pyrene	610	625, 1625	610	
87. 2,3,7,8-Tetrachlorodibenzo-p-dioxin		[5]613		
88. 1,1,2,2-Tetrachloroethane	601	624, 1624		Note 3, p. 130;
89. Tetrachloroethene	601	624, 1624		Note 3, p. 130;
90. Toluene	602	624, 1624		
91. 1,2,4-Trichlorobenzene	612	625, 1625		Note 3, p. 130;
92. 1,1,1-Trichloroethane	601	624, 1624		
93. 1,1,2-Trichloroethane	601	624, 1624		Note 3, p. 130;
94. Trichloroethene	601	624, 1624		
95. Trichlorofluoromethane	601	624		
96. 2,4,6-Trichlorophenol	604	625, 1625		
97. Vinyl chloride	601	624, 1624		

Table IC Notes

[1] All parameters are expressed in micrograms per liter (µg/L).

[2] The full text of Methods 601-613, 624, 625, 1624, and 1625, are given at Appendix A, "Test Procedures for Analysis of Organic Pollutants," of this Part 136. The standardized test procedure to be used to determine the method detection limit (MDL) for these test procedures is given at Appendix B, "Definition and Procedure for the Determination of the Method Detection Limit," of this Part 136.

[3] "Methods for Benzidine; Chlorinated Organic Compounds, Pentachlorophenol and Pesticides in Water and Wastewater," U.S. Environmental Protection Agency, September, 1978.

[4] Method 524 may be extended to screen samples for Acrolein and Acrylonitrile. However, when they are known to be present, the preferred method for these two compounds is Method 603 or Method 1624.

[5] Method 625 may be extended to include benzidine, hexachlorocyclopentadiene, N-nitrosodimethylamine, and N-nitrosodiphenylamine. However, when they are known to be present, Methods 605, 607, and 612, or Method 1625, are preferred methods for these compounds.

[6] 625 Screening only.

[7] "Selected Analytical Methods Approved and Cited by the United States Environmental Protection Agency," Supplement to the Fifteenth Edition of *Standard Methods for the Examination of Water and Wastewater* (1981).

[8] Each analyst must make an initial, one-time, demonstration of their ability to generate acceptable precision and accuracy with Methods 601-613, 624, 625, 1624, and 1625 (See Appendix A of this Part 136) in accordance with procedures each in section 8.2 of each of these Methods. Additionally, each laboratory, on an on-going basis must take and analyze 10% (5% for Methods 624 and 625 and 100% for methods 1624, and 1625) of all samples to monitor and evaluate laboratory data quality in accordance with sections 8.3 and 8.4 of these Methods. When the recovery of any parameter falls outside the warning limits, the analytical results for that parameter in the unspiked sample are suspect and cannot be reported to demonstrate regulatory compliance.

Note.—These warning limits are promulgated as an "interim final action with a request for comments."

TABLE ID.—LIST OF APPROVED TEST PROCEDURES FOR PESTICIDES [1]

(Table ID corrected by 50 FR 691, 695, January 4, 1985)

Parameter µg/L)	Method	EPA [2,3]	Standard Methods 15th Ed	ASTM	Other
1. Alachlor	GC	608	509A	D3086	Note 3, p. 7; Note 4, p. 30.
	GC/MS	625			
2. Ametryn	GC				Note 3, p. 83; Note 6, p. 566.
3. Aminocarb	TLC				Note 3, p. 94; Note 6, p. 516.
4. Alrazon	GC				Note 3, p. 83; Note 6, p. 566.
5. Atrazine	GC				Note 3, p. 83; Note 6, p. 568.
6. Azinphos methyl	GC				Note 3, p. 25; Note 6, p. 551.
7. Barban	TLC				Note 3, p. 104; Note 6, p. 564
8. α-BHC	GC	608	509A	D3086	Note 3, p. 7.
	GC/MS	[4]625			
9. β-BHC	GC	608		D3086	
	GC/MS	625			
10. δ-BHC	GC	608		D3086	
	GC/MS	[4]625			
11. γ-BHC (Lindane)	GC	608	509A	D3086	Note 3, p. 7; Note 4, p. 30.
	GC/MS	625			
12. Captan	GC		509A		Note 3, p. 7.
13. Carbaryl	TLC				Note 3, p. 94; Note 6, p. 560.
14. Carbophenothion	GC				Note 4, p. 30; Note 6, p. 573.
15. Chlordane	GC	608	509A	D3086	Note 3, p. 7.
	GC/MS	625			
16. Chloropropham	TLC				Note 3, p. 104; Note 6, p. 564.
17. 2,4-D	GC		509B		Note 3, p. 115; Note 4, p. 35.

TABLE ID.—LIST OF APPROVED TEST PROCEDURES FOR PESTICIDES [1]—Continued

Parameter µg/L	Method	EPA [6,7]	Standard Methods 15th Ed	ASTM	Other
18. 4,4'-DDD	GC	608	509A	D3086	Note 3, p. 7; Note 4, p. 30.
	GC-MS	625			
19. 4,4'-DDE	GC	608	509A	D3086	Note 3, p. 7; Note 4, p. 30.
	GC/MS	625			
20. 4,4'-DDT	GC	608	509A	D3086	Note 3, p. 7; Note 4, p. 30.
	GC/MS	625			
21. Demeton-O	GC				Note 3, p. 25; Note 6, p. S51.
22. Demeton-S	GC				Note 3, p. 25; Note 6, p. S51.
23. Diazinon	GC				Note 3, p. 25; Note 4, p. 30; Note 6, p. S51.
24. Dicamba	GC				Note 3, p. 115.
25. Dichlofenthion	GC				Note 4, p. 30; Note 6, p. S73.
26. Dichlorvos	GC		509A		Note 3, p. 7.
27. Dicofol	GC			D3086	
28. Dieldrin	GC	608	509A		Note 3, p. 7; Note 4, p. 30.
	GC/MS	625			
29. Dioxathion	GC				Note 4, p. 30; Note 6, p. S73.
30. Diquiolon	GC				Note 3, p. ; Note 6, p. S51.
31. Diuron	TLC				Note 3, p. 104; Note 6, p. S64.
32. Endosulfan I	GC	608	509A	D3086	Note 3, p. 7.
	GC/MS	[8] 625			
33. Endosulfan II	GC	608	509A	D3086	Note 3, p. 7.
	GC/MS	[8] 625			
34. Endosulfan sulfate	GC	608			
	GC/MS	625			
35. Endrin	GC	608	509A	D3086	Note 3, p. 7; Note 4, p. 30.
	GC/MS	[8] 625			
36. Endrin aldehyde	GC	608			
	GC/MS	625			
37. Ethion	GC				Note 4, p. 30; Note 6, p. S73.
38. Fenuron	TLC				Note 3, p. 104; Note 6, p. S64.
39. Fenuron-TCA	TLC				Note 3, p. 104; Note 6, p. S64.
40. Heptachlor	GC	608	509A	D3086	Note 3, p. 7; Note 4, p. 30.
	GC/MS	625			
41. Heptachlor epoxide	GC	608	509A	D3086	Note 3, p. 7; Note 4, p. 30; Note 6, p. S73.
42. Isodrin	GC/MS	625			Note 4, p. 30; Note 6, p. S73.
	GC				
43. Linuron	TLC				Note 3, p. 104; Note 6, p. S64.
44. Malathion	GC		509A		Note 3, p. 25; Note 4, p. 30; Note 6, p. S51.
45. Methiocarb	TLC				Note 3, p. 94; Note 6, p. S60.
46. Methoxychlor	GC		509A	D3086	Note 3, p. 7; Note 4, p. 30.
47. Metribuzin	TLC				Note 3, p. 94; Note 6, p. S60.
48. Mirex	GC		509A		Note 3, p. 7.
49. Monuron	TLC				Note 3, p. 104; Note 6, p. S64.
50. Monuron-TCA	TLC				Note 3, p. 104; Note 6, p. S64.
51. Neburon	TLC				Note 3, p. 104; Note 6, p. S64.
52. Parathion methyl	GC		509A		Note 3, p. 25; Note 4, p. 30.
53. Parathion ethyl	GC		509A		Note 3, p. 25.
54. PCNB	GC		509A		Note 3, p. 7.
55. Perthane	GC			D3086	
56. Prometon	GC				Note 3, p. 83; Note 6, p. S66.
57. Prometryn	GC				Note 3, p. 83; Note 6, p. S68.
58. Propazine	GC				Note 3, p. 83; Note 6, p. S68.
59. Propham	TLC				Note 3, p. 104; Note 6, p. S64.
60. Propoxur	TLC				Note 3, p. 94; Note 6, p. S60.
61. Secbumeton	TLC				Note 3, p. 83; Note 6, p. S68.
62. Siduron	TLC				Note 3, p. 104; Note 6, p. S64.
63. Simazine	GC				Note 3, p. 83; Note 6, p. S68.
64. Strobane	GC		509A		Note 3, p. 7.
65. Swep	TLC				Note 3, p. 104; Note 6, p. S64.
66. 2,4,5-T	GC		509B		Note 3, p. 115; Note 4, p. 35.
67. 2,4,5-TP (Silvex)	GC		509B		Note 3, p. 115.
68. Terbuthylazine	GC				Note 3, p. 83; Note 6, p. S68.
69. Toxaphene	GC	608	509A	D3086	Note 3, p. 7; Note 4, p. 30.
	GC/MS	625			
70. Trifluralin	GC		509A		Note 3, p. 7

Table ID Notes

[1] Pesticides are listed in this table by common name for the convenience of the reader. Additional pesticides may be found under Table IC, where entries are listed by chemical name.

[2] The full text of methods 608 and 625 are given at Appendix A, "Test Procedures for Analysis of Organic Pollutants," of the Part 136. The standardized test procedure to be used to determine the method detection limit (MDL) for these test procedures is given at Appendix B, "Definition and Procedure for the Determination of the Method Detection Limit", of the Part 136.

[3] "Methods for Benzidine, Chlorinated Organic Compounds, Pentachlorophenol and Pesticides in Water and Wastewater," U.S. Environmental Protection Agency, September, 1978. This EPA publication includes thin-layer chromatography (TLC) methods.

[4] "Methods for Analysis of Organic Substances in Water," U.S. Geological Survey, Techniques of Water-Resources Investigations, Book 5, Chapter A3 (1972).

[5] *The method may be extended to include α-BHC, δ-BHC, endosulfan I, endosulfan II, and endrin. However, when they are known to exist, Method 608 is the preferred method.*

[6] "Selected Analytical Methods Approved and Cited by the United States Environmental Protection Agency," Supplement to the Fifteenth Edition of *Standard Methods for the Examination of Water and Wastewater* (1981).

[7] Each analyst must make an initial, one-time, demonstration of their ability to generate acceptable precision and accuracy with Methods 608 and 625 (See Appendix A of the Part 136) in accordance with procedures given in Section 8.2 of each of these methods. Additionally, each laboratory, on an on-going basis, must spike and analyze 10% of all samples analyzed with Method 608 or 5% of all samples analyzed with Method 625 to monitor and evaluate laboratory data quality in accordance with Sections 8.3 and 8.4 of these methods. When the recovery of any parameter falls outside the warning limits, the analytical results for that parameter in the unspiked sample are suspect and cannot be reported to demonstrate regulatory compliance.

Note.—These warning limits are promulgated as an "interim final action with a request for comments."

TABLE IE.—LIST OF APPROVED RADIOLOGICAL TEST PROCEDURES

[Table 1E revised by 51 FR 23692, June 30, 1986]

Parameter and units	Methods	EPA [1]	Reference (method No. or page)		
			Standard methods 16th ed.	ASTM	USGS [2]
1. Alpha-Total, pCi per liter	Proportional or scintillation counter	900.0	703	D1943-81	pp. 75 and 78 [4]
2. Alpha-Counting error, pCi per liter	Proportional or scintillation counter	Appendix B	703	D1943-81	p. 79
3. Beta-Total, pCi per liter	Proportional counter	900.0	703	D1890-81	pp. 75 and 78 [4]
4. Beta-Counting error, pCi	Proportional counter	Appendix B	703	D1890-81	p. 79
5. (a) Radium-Total, pCi per liter	Proportional counter	903.0	705	D2460-70	
(b) ^{226}Ra, pCi per liter	Scintillation counter	903.1	706	D3454-79	p. 81.

TABLE IE NOTES:

[1] "Prescribed Procedures for Measurement of Radioactivity in Drinking Water," EPA-600/4-80-032 (1980 update), U.S. Environmental Protection Agency, August 1980.

[2] Fishman, M.J. and Brown, Eugene, "Selected Methods of the U.S. Geological Survey of Analysis of Wastewaters," U.S. Geological Survey, Open-File Report 76-177 (1976).

[4] The method found on p. 75 measures only the dissolved portion while the method on p. 78 measures only the suspended portion. Therefore, the two results must be added to obtain the "total."

(b) The full texts of the methods from the following references which are cited in Tables IA, IB, IC, ID, and IE are incorporated by reference into this regulation and may be obtained from the sources identified. All costs cited are subject to change and must be verified from the indicated sources. The full texts of all the test procedures cited are available for inspection at the Office of the Federal Register, Room 8301, 1110 L Street, NW., Washington, DC 20408.

References, Sources, Costs, and Table Citations:

(1) The full texts of Methods 601–613, 624, 625, 1624, and 1625 are printed in Appendix A of this Part 136. The full text for determining the method detection limit when using the test procedures is given in Appendix B of this Part 136. The full text of Method 200.7 is printed in Appendix C of this Part 136. Cited in: Table IB, Note 4; Table IC, Note 2; and Table ID, Note 2.

(2) "Microbiological Methods for Monitoring the Environment, Water and Wastes," U.S. Environmental Protection Agency, EPA-600/8-78-017, 1978. Available from: ORD Publications, CERI, U.S. Environmental Protection Agency, Cincinnati, Ohio 45268. Table IA, Note 2.

(3) "Methods for Chemical Analysis of Water and Wastes," U.S. Environmental Protection Agency, EPA-600/4-79-020, March, 1979. Available from ORD Publications, CERI, U.S. Environmental Protection Agency, Cincinnati, Ohio 45268. Table IB.

(4) "Methods for Benzidine, Chlorinated Organic Compounds, Pentachlorophenol and Pesticides in Water and Wastewater," U.S. Environmental Protection Agency, 1978. Available from: ORD Publications, CERI, U.S. Environmental Protection Agency, Cincinnati, Ohio 45268. Table IC, Note 3; Table ID, Note 3.

(5) "Prescribed Procedures for Measurement of Radioactivity in Drinking Water," U.S. Environmental Protection Agency, EPA-600/4-80-032, 1980. Available from ORD Publications, CERI, U.S. Environmental Protection Agency, Cincinnati, Ohio 45268. Table IE, Note 1.

(6) *Standard Methods for the Examination of Water and Wastewater*, Joint Editorial Board, American Public Health Association, American Water Works Association, and Water Pollution Control Federation, 16th Edition, 1985. Available from: American Public Health Association, 1015 Fifteenth Street, NW., Washington, DC 20036. Cost: $90.00. Tables IB and IE.

(7) Ibid, 15th Edition. Table IA; Table IB, note 29; Table ID.

(8) Ibid, 14th Edition. Table IB, Notes 16 and 28.

(9) Ibid, 13th Edition. Table IB, Note 30.

(10) "Selected Analytical Methods Approved and Cited by the United States Environmental Protection Agency," Supplement to the 15th Edition of *Standard Methods for the Examination of Water and Wastewater*, 1981. Available from: American Public Health Association, 1015 Fifteenth Street NW, Washington, DC 20036. Cost available from publisher. Table IB, Note 9; Table IC, Note 6; Table ID, Note 6.

(11) "Annual Book of Standards, section 11, Water," American Society for Testing and Materials, 1916 Race Street, Philadelphia, PA 19103. Cost available from publisher. Tables IB, ID, and IE.

(12) "Methods for Collection and Analysis of Aquatic Biological and Microbiological Samples," edited by P.E. Greason, T.A. Ehlke, G.A. Irwin, B.W. Lium, and K.V. Slack, U.S. Geological Survey, Techniques of Water Resources Investigation [USGS TWRI], Book 5, Chapter A4 (1977). Available from: U.S. Geological Survey, Branch of Distribution, 1200 South Eads Street, Arlington, VA 22202. Cost: $9.25 (subject to change). Table IA.

(13) "Methods for Determination of Inorganic Substances in Water and Fluvial Sediments," by M.J. Fishman and Linda C. Freeman: U.S. Geological Survey Open File Report 85-495 (1986). Available from U.S. Geological Survey, Western Distribution Branch, Box 25425, Denver Federal Center, Denver, CO 80225. Cost $108.75 (subject to change). Table IB, Note 1.

(14) "Methods for Determination of Inorganic Substances in Water and Fluvial Sediments," N.W. Skougstad and others, editors, USGS TWRI, Book 5, Chapter A1 (1979). Available from U.S. Geological Survey, Branch of Distribution, 1200 South Eads Street, Arlington, VA 22202. Cost $10.00 (subject to change). Table IB, Note 7.

(15) "Methods for Analysis of Organic Substances in Water," by D.F. Goerlitz and Eugene Brown: USGS TWRI, Book 5, Chapter A3 (1972). Available from U.S. Geological Survey, Branch of Distribution, 1200 South Eads Street, Arlington, VA 22202. Cost $0.90 (subject to change). Table IB, Note 22; Table ID, Note 4.

(16) "Water Temperature—Influential Factors, Field Measurement and Data Presentation," by H.H. Stevens, Jr., J. Ficke, and G.F. Smoot: USGS TWRI Book 1, Chapter D1, 1975. Available from U.S. Geological Survey, Branch of Distribution, 1200 South Eads Street, Arlington, VA 22202. Cost $1.60 (subject to change). Table IB, Note 31.

(17) "Selected Methods of the U.S. Geological Survey of Analysis of Wastewaters," by M.J. Fishman and Eugene Brown: U.S. Geological Survey Open File Report 76-77 (1976). Available from U.S. Geological Survey, Branch of Distribution, 1200 South Eads Street, Arlington, VA 22202. Cost $13.50 (subject to change). Table IE, Note 2.

(18) Official Methods of Analysis of the Association of Official Analytical Chemicals, methods manual, 14th Edition (1985). Price:

$145.50. Available from: The Association of Official Analytical Chemicals, 1111 N. 19th Street, Suite 210, Arlington, VA 22209. Table IB, Note 2.

(19) "American National Standard on Photographic Processing Effluents," April 2, 1975. Available from: American National Standards Institute, 1430 Broadway, New York, New York 10018. Table IB, Note 8.

(20) "An Investigation of Improved Procedures for Measurement of Mill Effluent and Receiving Water Color," NCASI Technical Bulletin No. 253, December 1971. Available from: National Council of the Paper Industry for Air and Stream Improvements, Inc., 260 Madison Avenue. Cost available from publisher. Table IB, Note 17.

(21) Ammonia, Automated Electrode Method, Industrial Method Number 379-75WE, dated February 19, 1976, Technicon AutoAnalyzer II. Method and price available from Technicon Industrial Systems, Tarrytown, New York 10591. Table IB, Note 6.

(22) Chemical Oxygen Demand, Method 8000, Hach Handbook of Water Analysis, 1979. Method and price available from Hach Chemical Company, P.O. Box 389, Loveland, Colorado 80537. Table IB, Note 13.

(23) CIC Chemical Oxygen Demand Method. Method and price available from Oceanography International Corporation, 512 West Loop, P.O. Box 2980, College Station, Texas 77840. Table IB, Note 12.

(24) ORION Research Instruction Manual, Residual Chlorine Electrode Model 97-70, 1977. Method and price available from Orion Research Incorporation, 840 Memorial Drive, Cambridge, Massachusetts 02138. Table IB, Note 15.

(25) Bicinchoninate Method for Copper, Method 8506, Hach Handbook of Water Analysis, 1979. Method and price available from Hach Chemical Company, P.O. Box 300, Loveland, Colorado 80537. Table IB, Note 18.

(26) Hydrogen Ion (pH) Automated Electrode Method, Industrial Method Number 378-75WA, October 1976, Technicon AutoAnalyzer II. Method and price available from Technicon Industrial Systems, Tarrytown, New York 10591. Table IB, Note 20.

(27) 1, 10-Phenanthroline Method for Iron, Hach Method 8008. Method and price available from Hach Chemical Company, P.O. Box 389, Loveland, Colorado 80537. Table IB, Note 21.

(28) Periodate Oxidation Method for Manganese, Method 8034, Hach Handbook for Water Analysis, 1979. Method and price available from Hach Chemical Company, P.O. Box 389, Loveland, Colorado 80537. Table IB, Note 22.

(29) Nitrite Nitrogen, Hach Method 8507. Method and price available from Hach Chemical Company, P.O. Box 389, Loveland, Colorado 80537. Table IB, Note 24.

(30) Zincon Method for Zinc, Method 8009, Hach Handbook for Water Analysis, 1979. Method and price available from Hach Chemical Company, P.O. Box 389, Loveland, Colorado 80537. Table IB, Note 32.

(31) "Direct Determination of Elemental Phosphorus by Gas-Liquid Chromatography," by R.F. Addison and R.G. Ackman, Journal of Chromatography, Volume 47, No. 3, pp. 421-426, 1970. Available in most public libraries. Back volumes of the Journal of Chromatography are available from Elsevier/North-Holland, Inc., Journal Information Centre, 52 Vanderbilt Avenue, New York, NY 10164. Cost available from publisher. Table IB, Note 27.

[136.3(b) corrected by 50 FR 691, 695, January 4, 1985; revised by 51 FR 23692, June 30, 1986]

(c) Under certain circumstances the Regional Administrator or the Director in the Region or State where the discharge will occur may determine for a particular discharge that additional parameters or pollutants must be reported. Under such circumstances, additional test procedures for analysis of pollutants may be specified by the Regional Administrator, or the Director upon the recommendation of the Director of the Environmental Monitoring and Support Laboratory, Cincinnati.

(d) Under certain circumstances, the Administrator may approve, upon recommendation by the Director, Environmental Monitoring and Support Laboratory, Cincinnati, additional alternate test procedures for nationwide use.

(e) Sample preservation procedures, container materials, and maximum allowable holding times for parameters cited in Tables IA, IB, IC, ID, and IE are prescribed in Table II. Any person may apply for a variance from the prescribed preservatio techniques, container materials, and maximum holding times applicable to samples taken from a specific discharge. Applications for variances may be made by letters to the Regional Administrator in the Region in which the discharge will occur. Sufficient data should be provided to assure such variance does not adversely affect the integrity of the sample. Such data will be forwarded by the Regional Administrator to the Director of the Environmental Monitoring and Support Laboratory in Cincinnati, Ohio for technical review and recommendations for action on the variance application. Upon receipt of the recommendations from the Director of the Environmental Monitoring and Support Laboratory, the Regional Administrator may grant a variance applicable to the specific discharge to the applicant. A decision to approve or deny a variance will be made within 90 days of receipt of the application by the Regional Administrator.

TABLE II.—REQUIRED CONTAINERS, PRESERVATION TECHNIQUES, AND HOLDING TIMES

[Table II corrected by 50 FR 691, January 4, 1985]

Parameter No./name	Container [1]	Preservation [2,3]	Maximum holding time [4]
Table IA—Bacterial Tests:			
1-4. Coliform, fecal and total	P, G	Cool, 4°C, 0.008% $Na_2S_2O_3$ [5]	6 hours.
5. Fecal streptococci	P, G	do	Do.
Table IB—Inorganic Tests:			
1. Acidity	P, G	Cool, 4°C	14 days.
2. Alkalinity	P, G	do	Do.
4. Ammonia	P, G	Cool, 4°C, H_2SO_4 to pH < 2	28 days.
9. Biochemical oxygen demand	P, G	Cool, 4°C	48 hours.
11. Bromide	P, G	None required	28 days.
14. Biochemical oxygen demand, carbonaceous.	P, G	Cool, 4°C	48 hours.
15. Chemical oxygen demand	P, G	Cool, 4°C, H_2SO_4 to pH < 2	28 days.
16. Chloride	P, G	None required	Do.
17. Chlorine, total residual	P, G	do	Analyze immediately.
21. Color	P, G	Cool, 4°C	48 hours.

TABLE II.—REQUIRED CONTAINERS, PRESERVATION TECHNIQUES, AND HOLDING TIMES—Continued

Parameter No./name	Container [1]	Preservation [2,3]	Maximum holding time [4]
23–24. Cyanide, total and amenable to chlorination.	P, G	Cool, 4°C, NaOH to pH>12, 0.6g ascorbic acid [5].	14 days.[6]
25. Fluoride	P	None required	28 days.
27. Hardness	P, G	HNO_3 to pH<2, H_2SO_4 to pH<2.	6 months.
28. Hydrogen ion (pH)	P, G	None required	Analyze immediately
31, 43. Kjeldahl and organic nitrogen	P, G	Cool, 4°C, H_2SO_4 to pH<2	28 days.
Metals:[7]			
18. Chromium VI	P, G	Cool, 4°C	24 hours.
35. Mercury	P, G	HNO_3 to pH<2	28 days.
3, 5–8, 10, 12, 13, 19, 20, 22, 26, 29, 30, 32–34, 36, 37, 45, 47, 51, 52, 58–60, 62, 63, 70–72, 74, 75. Metals, except chromium VI and mercury.	P, G	do	6 months.
38. Nitrate	P, G	Cool, 4°C	48 hours.
39. Nitrite-nitrate	P, G	Cool, 4°C, H_2SO_4 to pH<2	28 days.
40. Nitrite	P, G	Cool, 4°C	48 hours.
41. Oil and grease	G	Cool, 4°C, H_2SO_4 to pH<2	28 days.
42. Organic carbon	P, G	Cool, 4°C, HCl or H_2SO_4 to pH<2.	Do.
44. Orthophosphate	P, G	Filter immediately, Cool, 4°C	48 hours.
46. Oxygen, Dissolved Probe	G Bottle and top.	None required	Analyze immediately.
47. Winkler	do	Fix on site and store in dark	8 hours.
48. Phenols	G only	Cool, 4°C, H_2SO_4 to pH<2	28 days.
49. Phosphorus (elemental)	G	Cool, 4°C	48 hours.
50. Phosphorus, total	P, G	Cool, 4°C, H_2SO_4 to pH<2	28 days.
53. Residue, total	P, G	Cool, 4°C	7 days
54. Residue, Filterable	P, G	do	7 days.
55. Residue, Nonfilterable (TSS)	P, G	do	7 days.
56. Residue, Settleable	P, G	do	48 hours.
57. Residue, volatile	P, G	do	7 days
61. Silica	P	do	28 days.
64. Specific conductance	P, G	do	Do.
65. Sulfate	P, G	do	Do.
66. Sulfide	P, G	Cool, 4°C add zinc acetate plus sodium hydroxide to pH>9.	7 days
67. Sulfite	P, G	None required	Analyze immediately
68. Surfactants	P, G	Cool, 4°C	48 hours.
69. Temperature	P, G	None required	Analyze.
73. Turbidity	P, G	Cool, 4°C	48 hours
Table IC—Organic Tests.[8]			
13, 18–20, 22, 24–28, 34–37, 39–43, 45–47, 56, 66, 68, 69, 92–95, 97 Purgeable Halocarbons.	G, Teflon-lined septum.	Cool, 4°C, 0.008% $Na_2S_2O_3$[5]	14 days.
6, 57, 90. Purgeable aromatic hydrocarbons	do	Cool, 4°C, 0.008% $Na_2S_2O_3$[5], HCl to pH2[9].	Do
3, 4. Acrolein and acrylonitrile	do	Cool, 4°C, 0.008% $Na_2S_2O_3$[5]; Adjust pH to 4–5[10].	Do.
23, 30, 44, 49, 53, 67, 70, 71, 83, 85, 96. Phenols[11].	G, Teflon-lined cap.	Cool, 4°C, 0.008% $Na_2S_2O_3$[5]	7 days until extraction, 40 days after extraction
7, 38. Benzidines[11]	do	do	7 days until extraction[12]
14, 17, 48, 50–52. Phthalate esters[11]	do	Cool, 4°C	7 days until extraction, 40 days after extraction.
72–74. Nitrosamines[11,13]	do	Cool, 4°C, store in dark, 0.008% $Na_2S_2O_3$[5].	Do.
76–82. PCBs[11] acrylonitrile	do	Cool, 4°C	Do
54, 55, 65, 69. Nitroaromatics and isophorone[11]	do	Cool, 4°C, 0.008% $Na_2S_2O_3$[5] store in dark.	Do.
1, 2, 5, 8–12, 32, 33, 58, 59, 84, 88, 94, 86. Polynuclear aromatic hydrocarbons.[11]	do	do	Do.
15, 16, 21, 31, 75. Haloethers[11]	do	Cool, 4°C, 0.008% $Na_2S_2O_3$[5]	Do.
29, 35–37, 60–63, 91. Chlorinated hydrocarbons[11].	do	Cool, 4°C	Do.
87. TCDD[11]	do	Cool, 4°C, 0.008% $Na_2S_2O_3$[5]	Do.

TABLE II.—REQUIRED CONTAINERS, PRESERVATION TECHNIQUES, AND HOLDING TIMES—Continued

Parameter No./name	Container [1]	Preservation [2] [3]	Maximum holding time [4]
Table ID—Pesticides Tests:			
1-70. Pesticides [11]	do	Cool, 4°C, pH 5-9 [12]	Do.
Table IE—Radiological Tests:			
1-5. Alpha, beta and radium	P, G	HNO_3 to pH < 2	6 months.

Table II Notes

[1] Polyethylene (P) or Glass (G).

[2] Sample preservation should be performed immediately upon sample collection. For composite chemical samples each aliquot should be preserved at the time of collection. When use of an automated sampler makes it impossible to preserve each aliquot, then chemical samples may be preserved by maintaining at 4°C until compositing and sample splitting is completed.

[3] When any sample is to be shipped by common carrier or sent through the United States Mails, it must comply with the Department of Transportation Hazardous Materials Regulations (49 CFR Part 172). The person offering such material for transportation is responsible for ensuring such compliance. For the preservation requirements of Table II, the Office of Hazardous Materials, Materials Transportation Bureau, Department of Transportation has determined that the Hazardous Materials Regulations do not apply to the following materials: Hydrochloric acid (HCl) in water solutions at concentrations of 0.04% by weight or less (pH about 1.96 or greater); Nitric acid (HNO_3) in water solutions at concentrations of 0.15% by weight or less (pH about 1.62 or greater); Sulfuric acid (H_2SO_4) in water solutions at concentrations of 0.35% by weight or less (pH about 1.15 or greater); and Sodium hydroxide (NaOH) in water solutions at concentrations of 0.080% by weight or less (pH about 12.30 or less).

[4] Samples should be analyzed as soon as possible after collection. The times listed are the maximum times that samples may be held before analysis and still be considered valid. Samples may be held for longer periods only if the permittee, or monitoring laboratory, has data on file to show that the specific types of samples under study are stable for the longer time, and has received a variance from the Regional Administrator under § 136.3(e). Some samples may not be stable for the maximum time period given in the table. A permittee, or monitoring laboratory, is obligated to hold the sample for a shorter time if knowledge exists to show that this is necessary to maintain sample stability. See § 136.3(e) for details.

[5] Should only be used in the presence of residual chlorine.

[6] Maximum holding time is 24 hours when sulfide is present. Optionally all samples may be tested with lead acetate paper before pH adjustments in order to determine if sulfide is present. If sulfide is present, it can be removed by the addition of cadmium nitrate powder until a negative spot test is obtained. The sample is filtered and then NaOH is added to pH 12.

[7] Samples should be filtered immediately on-site before adding preservative for dissolved metals.

[8] Guidance applies to samples to be analyzed by GC, LC, or GC/MS for specific compounds.

[9] Sample receiving no pH adjustment must be analyzed within seven days of sampling.

[10] The pH adjustment is not required if acrolein will not be measured. Samples for acrolein receiving no pH adjustment must be analyzed within 3 days of sampling.

[11] When the extractable analytes of concern fall within a single chemical category, the specified preservative and maximum holding times should be observed for optimum safeguard of sample integrity. When the analytes of concern fall within two or more chemical categories, the sample may be preserved by cooling to 4°C, reducing residual chlorine with 0.008% sodium thiosulfate, storing in the dark, and adjusting the pH to 6-9; samples preserved in this manner may be held for seven days before extraction and for forty days after extraction. Exceptions to this optional preservation and holding time procedure are noted in footnote 5 (re the requirement for thiosulfate reduction of residual chlorine), and footnotes 12, 13 (re the analysis of benzidine).

[12] If 1,2-diphenylhydrazine is likely to be present, adjust the pH of the sample to 4.0 ± 0.2 to prevent rearrangement to benzidine.

[13] Extracts may be stored up to 7 days before analysis if storage is conducted under an inert (oxidant-free) atmosphere.

[14] For the analysis of diphenylnitrosamine, add 0.008% $Na_2S_2O_3$ and adjust pH to 7-10 with NaOH within 24 hours of sampling.

[15] The pH adjustment may be performed upon receipt at the laboratory and may be omitted if the samples are extracted within 72 hours of collection. For the analysis of aldrin, add 0.008% $Na_2S_2O_3$.

§ 136.4 Application for alternate test procedures.

(a) Any person may apply to the Regional Administrator in the Region where the discharge occurs for approval of an alternative test procedure.

(b) When the discharge for which an alternative test procedure is proposed occurs within a State having a permit program approved pursuant to section 402 of the Act, the applicant shall submit his application to the Regional Administrator through the Director of the State agency having responsibility for issuance of NPDES permits within such State.

(c) Unless and until printed application forms are made available, an application for an alternate test procedure may be made by letter in triplicate. Any application for an alternate test procedure under this paragraph (c) shall:

(1) Provide the name and address of the responsible person or firm making the discharge (if not the applicant) and the applicable ID number of the existing or pending permit, issuing agency, and type of permit for which the alternate test procedure is requested, and the discharge serial number.

(2) Identify the pollutant or parameter for which approval of an alternate testing procedure is being requested.

(3) Provide justification for using testing procedures other than those specified in Table I.

(4) Provide a detailed description of the proposed alternate test procedure, together with references to published studies of the applicability of the alternate test procedure to the effluents in question.

(d) An application for approval of an alternate test procedure for nationwide use may be made by letter in triplicate to the Director, Environmental Monitoring and Support Laboratory, Cincinnati, Ohio 45268. Any application for an alternate test procedure under this paragraph (d) shall:

(1) Provide the name and address of the responsible person or firm making the application.

(2) Identify the pollutant(s) or parameter(s) for which nationwide approval of an alternate testing procedure is being requested.

(3) Provide a detailed description of the proposed alternate procedure, together with references to published or other studies confirming the general applicability of the alternate test procedure to the pollutant(s) or parameter(s) in waste water discharges from representative and specified industrial or other categories.

(4) Provide comparability data for the performance of the proposed alternate test procedure compared to the performance of the approved test procedures.

§ 136.5 Approval of alternate test procedures.

(a) The Regional Administrator of the region in which the discharge will occur has final responsibility for approval of any alternate test procedure proposed by the responsible person or firm making the discharge.

(b) Within thirty days of receipt of an application, the Director will forward such application proposed by the responsible person or firm making the discharge, together with his recommendations, to the Regional Adminis-

trator. Where the Director recommends rejection of the application for scientific and technical reasons which he provides, the Regional Administrator shall deny the application, and shall forward a copy of the rejected application and his decision to the Director of the State Permit Program and to the Director of the Environmental Monitoring and Support Laboratory, Cincinnati.

(c) Before approving any application for an alternate test procedure proposed by the responsible person or firm making the discharge, the Regional Administrator shall forward a copy of the application to the Director of the Environmental Monitoring and Support Laboratory, Cincinnati.

(d) Within ninety days of receipt by the Regional Administrator of an application for an alternate test procedure, proposed by the responsible person or firm making the discharge, the Regional Administrator shall notify the applicant and the appropriate State agency of approval or rejection, or shall specify the additional information which is required to determine whether to approve the proposed test procedure. Prior to the expiration of such ninety day period, a recommendation providing the scientific and other technical basis for acceptance or rejection will be forwarded to the Regional Administrator by the Director of the Environmental Monitoring and Support Laboratory, Cincinnati. A copy of all approval and rejection notifications will be forwarded to the Director, Environmental Monitoring and Support Laboratory, Cincinnati, for the purposes of national coordination.

(e) Within ninety days of the receipt by the Director of the Environmental Monitoring and Support Laboratory, Cincinnati of an application for an alternate test procedure for nationwide use, the Director of the Environmental Monitoring and Support Laboratory, Cincinnati shall notify the applicant of his recommendation to the Administrator to approve or reject the application, or shall specify additional information which is required to determine whether to approve the proposed test procedure. After such notification, an alternate method determined by the Administrator to satisfy the applicable requirements of this part shall be approved for nationwide use to satisfy the requirements of this subchapter; alternate test procedures determined by the Administrator not to meet the applicable requirements of this part shall be rejected. Notice of these determinations shall be submitted for publication in the FEDERAL REGISTER not later than 15 days after such notification and determination is made.

APPENDIX A TO PART 136—METHODS FOR ORGANIC CHEMICAL ANALYSIS OF MUNICIPAL AND INDUSTRIAL WASTEWATER.

[Appendix A added by 49 FR 43250, October 26, 1984]

METHOD 601—PURGEABLE HALOCARBONS

1. Scope and Application

1.1 This method covers the determination of 29 purgeable halocarbons.

The following parameters may be determined by this method:

Parameter	STORET No.	CAS No.
Bromodichloromethane	32101	75-27-4
Bromoform (D32104)	75-25-2	
Bromomethane	34413	74-83-9
Carbon tetrachloride	32102	56-23-5
Chlorobenzene	34301	108-90-7
Chloroethane	34311	75-00-3
2-Chloroethylvinyl ether	34576	110-75-8
Chloroform	32106	67-66-3
Chloromethane	34418	74-87-3
Dibromochloromethane	32105	124-48-1
1,2-Dichlorobenzene	34536	95-50-1
1,3-Dichlorobenzene	34566	541-73-1
1,4-Dichlorobenzene	34571	106-46-7
Dichlorodifluoromethane	34668	75-71-8
1,1-Dichloroethane	34496	75-34-3
1,2-Dichloroethane	34531	107-06-2
1,1-Dichloroethene	34501	75-35-4
trans-1,2-Dichloroethene	34546	156-60-5
1,2-Dichloropropane	34541	78-87-5
cis-1,3-Dichloropropene	34704	10061-01-5
trans-1,3-Dichloropropene	34699	10061-02-6
Methylene chloride	34423	75-09-2
1,1,2,2-Tetrachloroethane	34516	79-34-5
Tetrachloroethene	34475	127-18-4
1,1,1-Trichloroethane	34506	71-55-6
1,1,2-Trichloroethane	34511	79-00-5
Trichloroethene	39180	79-01-6
Trichlorofluoromethane	34488	75-69-4
Vinyl chloride	39175	75-01-4

[1.1 Table corrected by 50 FR 693, January 4, 1985; amended by 51 FR 23692, June 30, 1986]

1.2 This is a purge and trap gas chromatographic (GC) method applicable to the determination of the compounds listed above in municipal and industrial discharges as provided under 40 CFR 136.1. When this method is used to analyze unfamiliar samples for any or all of the compounds above, compound identifications should be supported by at least one additional qualitative technique. This method describes analytical conditions for a second gas chromatographic column that can be used to confirm measurements made with the primary column. Method 624 provides gas chromatograph/mass spectrometer (GC/MS) conditions appropriate for the qualitative and quantitative confirmation of results for most of the parameters listed above.

1.3 The method detection limit (MDL, defined in Section 12.1)[1] for each parameter is listed in Table 1. The MDL for a specific wastewater may differ from those listed, depending upon the nature of interferences in the sample matrix.

1.4 Any modification of this method, beyond those expressly permitted, shall be considered as a major modification subject to application and approval of alternate test procedures under 40 CFR 136.4 and 136.5.

1.5 This method is restricted to use by or under the supervision of analysts experienced in the operation of a purge and trap system and a gas chromatograph and in the interpretation of gas chromatograms. Each analyst must demonstrate the ability to generate acceptable results with this method using the procedure described in Section 8.2.

2. Summary of Method

2.1 An inert gas is bubbled through a 5-mL water sample contained in a specially-designed purging chamber at ambient temperature. The halocarbons are efficiently transferred from the aqueous phase to the vapor phase. The vapor is swept through a sorbent trap where the halocarbons are trapped. After purging is completed, the trap is heated and backflushed with the inert gas to desorb the halocarbons onto a gas chromatographic column. The gas chromatograph is temperature programmed to separate the halocarbons which are then detected with a halide-specific detector.[2,3]

2.2 The method provides an optional gas chromatographic column that may be helpful in resolving the compounds of interest from interferences that may occur.

3. Interferences

3.1 Impurities in the purge gas and organic compounds outgassing from the plumbing ahead of the trap account for the majority of contamination problems. The analytical system must be demonstrated to be free from contamination under the conditions of the analysis by running laboratory reagent blanks as described in Section 8.1.3. The use of non-Teflon plastic tubing, non-Teflon thread sealants, or flow controllers with rubber components in the purge and trap system should be avoided.

3.2 Samples can be contaminated by diffusion of volatile organics (particularly fluorocarbons and methylene chloride) through the septum seal into the sample during shipment and storage. A field reagent blank prepared from reagent water and carried through the sampling and handling protocol can serve as a check on such contamination.

3.3 Contamination by carry-over can occur whenever high level and low level samples are sequentially analyzed. To reduce carry-over, the purging device and

Revised 09-21-06

APPENDIX IIIB

TYPICAL ROUTINE MONITORING DATA FORMS

Repetitive Work Order Number: 06-015908-000 (R) Page 1 of 2

DRAFT

Originator	: TULLOS, JR., HENRY H.	Start Date	:
Requester	: BEEBE, BARRY B.	Action Code	: REPETITIVE WORK P.M.'S
Shutdown	: NO SHUTDOWN	Priority	:
Planner	: BEEBE, BARRY B.	Parts Reqd	:
Project	:	Reference	:
Area Code	: RM-P19	Date Reqrd	: 09/22/2006
Repair Tag	:	Late Date	:
		GL Code Combo	: PP83.511000..R123.1403.X.X.00003.03ROUTOM03.00001.X.X.X
Clearance Required	: N	Labor Code Combo	: PP83.511000.P00.R123.1403.X.X.00003.03ROUTOM03.00001.X.X.X
		Matl Code Combo	: PP83.511000.S10.R123.1403.X.X.00003.03ROUTOM03.00001.X.X.X
		Serv Code Combo	: PP83.511000.OSS.R123.1403.X.X.00003.03ROUTOM03.00001.X.X.X
		Serv Matl Code Combo	: PP83.511000.S00.R123.1403.X.X.00003.03ROUTOM03.00001.X.X.X

RETURN TO ELECT PLANNING

Text ID : Rep RM-1215*1

Work Description : SOLID WASTE IMPOUNDMENT INSPECTION.

+++++RETURN COMPLETED FORM TO ELECT PLANNING FOR FILING+++++

Problem Description :

Equipment No.	: RM-0P1900SY00	Revision Number	: 1
Asset Number	: RM-1215	Category	: 000
Keyword, Qualifier	: GROUND MAINT SY, SYSTEM	Last Meter Reading	: 1132.00
Asset Description	: MISC ID# - USE ONLY FOR EQUIPMENT NOT YET DEFINED		
Location	:	Last Reading Date	:

Description

Step	Crew Craft	Schedule Date	Persons	Hours
1.	RM-CHEM RM-CHEM		1	6.00

INSPECT THE IMPOUNDMENTS FOR THE FOLLOWING CONDITIONS:

1: SEEPAGE OF WATER OR MATERIAL THROUGH LEVY OR DIKE.
CHECK WITH GRASS CUTTERS FOR INFORMATION.

2: SIGNIFICANT EROSION OF LEVY OR DIKE.

3: RODENT OR ANIMAL BORROWING OF LEVY OR DIKE.

4: GROWTH OF TREES THAT COULD AFFECT THE INTEGRITY OF THE LEVY OR DIKE.

5: ANY GROWTH OF VEGITATION THAT WOULD PREVENT THE PROPER INSPECTION OF THE LEVY OR DIKE.

6: OVERTOPPING OF LEVY OR DIKE. (OVERFLOW OR WASHING OVER TOP)

7: ANY OTHER CONDITION THAT MAY CAUSE FAILURE OF LEVY OR DIKE AND LOSE OF IMPOUNDED MATERIAL.

	CHECK ONE	
IMPOUNDMENT	ADEQUATE	INADEQUATE

NOTES: Indicate any remarks or comments on the reverse side.
Completed by Employee Number:_____ Signature:_____
Date:_____ Reconciliation:____ Failure:___
Accepted by Employee Number:_____ Signature:_____
Asset Downtime:_____ Meter Reading:_____

Equipment No.	: RM-0P1900SY00	Revision Number	: 1
Asset Number	: RM-1215	Category	: 000
Keyword, Qualifier	: GROUND MAINT SY, SYSTEM		

DRAFT

Description

Step	Crew Craft	Schedule Date	Persons	Hours

1: RPS1 METAL WASTE _____ _____
2: RPS2 METAL WASTE _____ _____
3: FLYASH POND _____ _____
4: PRIM BOTTOM ASH POND _____ _____
5: SEC BOTTOM ASH POND _____ _____
6: COAL SED POND _____ _____
7: BULLET WASTE POND _____ _____

LIST ANY PROBLEMS AND LOCATION OF SUCH:

_____
_____
_____
_____
_____
_____
_____

INSPECTOR: _____
DATE : _____

Record Time Daily

Date	Employee Number	Hours	Enter
			[ ]
			[ ]
			[ ]
			[ ]

NOTES:

Pace Analytical®
New Orleans Laboratory

Pace Analytical Services, Inc.
1000 Riverbend Blvd. Suite F
Saint Rose, LA 70087

Phone: 504.469.0333
Fax: 504.469.0555
LELAP # 02006

Report ID: 2061096
Date Received: 7/12/2006

Company: Cleco Power, L.L.C. Rodemacher
Client: George Stafford

Address: 275 Rodemacher Road
Lena, LA 71447

Sample Location: Cleco Power, L.L.C. Rodemacher
Sample Type: Grab
Sampler: George Stafford

Sample ID	Parameter Name	Value	Unit	Reg. Limit	Det. Limit	DF	Method	Analysis Date/Time		Tech	Date Collected	
201												
20458736	Oil and Grease	ND	mg/L		5	1	EPA 1664A	7/14/2006	15:05	SMS2 (1)	07/12/06	07:07
20458736	Total Suspended Solids	6.00	mg/L	100/30	4	1	EPA 160.2	7/13/2006	19:05	MHM (1)	07/12/06	07:07
401 DISCHARGE												
20458737	Oil and Grease	ND	mg/L		5	1	EPA 1664A	7/14/2006	15:05	SMS2 (1)	07/12/06	07:22
20458737	Total Suspended Solids	4.00	mg/L	100/30	4	1	EPA 160.2	7/13/2006	19:05	MHM (1)	07/12/06	07:22
401 INTAKE												
20458738	Total Suspended Solids	7.00	mg/L	100/30	4	1	EPA 160.2	7/13/2006	19:05	MHM (1)	07/12/06	06:26
801-1												
20458739	Oil and Grease	ND	mg/L		5	1	EPA 1664A	7/14/2006	15:05	SMS2 (1)	07/12/06	06:33
20458739	Total Suspended Solids	ND	mg/L	100/30	4	1	EPA 160.2	7/13/2006	19:05	MHM (1)	07/12/06	06:33
801-2												
20458744	Oil and Grease	ND	mg/L		5	1	EPA 1664A	7/14/2006	15:05	SMS2 (1)	07/12/06	07:15
20458744	Total Suspended Solids	ND	mg/L	100/30	4	1	EPA 160.2	7/13/2006	19:05	MHM (1)	07/12/06	07:15
901-1												
20458745	Oil and Grease	ND	mg/L		5	1	EPA 1664A	7/14/2006	15:05	SMS2 (1)	07/12/06	07:01
20458745	Total Suspended Solids	9.00	mg/L	100/30	4	1	EPA 160.2	7/13/2006	19:05	MHM (1)	07/12/06	07:01
901-2												
20458746	Oil and Grease	ND	mg/L		5	1	EPA 1664A	7/14/2006	15:05	SMS2 (1)	07/12/06	06:39
20458746	Total Suspended Solids	14.0	mg/L	100/30	4	1	EPA 160.2	7/13/2006	19:05	MHM (1)	07/12/06	06:39

No part of this work may be altered in any form or by any means - graphic, electronic, or mechanical, including photocopying, recording, taping, or information and retrieval systems - without written permission of Pace Analytical Services, Inc.

Analysis performed in (1) New Orleans, (2) Baton Rouge, or (3) Bossier City, (4) Houston, or (8) subcontract or field.

Pace Analytical®
New Orleans Laboratory

Pace Analytical Services, Inc.
1000 Riverbend Blvd. Suite F
Saint Rose, LA 70087

Phone: 504.469.0333
Fax: 504.469.0555
LELAP # 02006

Report ID: 2061096
Date Received: 7/12/2006

Company: Cleco Power, L.L.C. Rodemacher
Client: George Stafford

Address: 275 Rodemacher Road
Lena, LA 71447

Sample Location: Cleco Power, L.L.C. Rodemacher
Sample Type: Grab
Sampler: George Stafford

Parameter	Batch	Blank	ARL	Units	LCS Spike	LCS %Rec	LCSD %Rec	LCS RPD	MS Spike	MS %Rec	MSD %Rec	(1)MS RPD	DUP RPD	QC Limits LCS	QC Limits MS/MSD	RPD Max
Oil and Grease	74709	ND	5.00	mg/L	40	84	82	3						78 - 114	-	20
Total Suspended Solids	74691	ND	4.00	mg/L	100	92								80 - 120	-	20

Notes:

Laboratory Representative:

No part of this work may be altered in any form or by any means - graphic, electronic, or mechanical, including photocopying, recording, taping, or information and retrieval systems - without written permission of Pace Analytical Services, Inc.

Analysis performed in (1) New Orleans, (2) Baton Rouge, or (3) Bossier City, (4) Houston, or (5) subcontract or field.

Pace Analytical

CHAIN-OF-CUSTODY / Analytical Request Document

The Chain-of-Custody is a LEGAL DOCUMENT. All relevant fields must be completed accurately.

Page: 1 of 1

2061096

Required Client Information: Section A

Company: Cleco Power, LLC Rodemache
Address: 275 Rodemacher Road
Lena, LA 71447
Phone: Fax:

Required Client Information: Section B

Report To: George Stafford
Copy To: Cynthia Aslin
Invoice To: Cynthia Aslin
P.O.
Project Name: Twice Per Month
Project Number:

Client Information (Check quote/contract):

Requested Due Date:
*TAT: 5 WD
* Turn around times less than 14 days subject
Discovery and contractual obligations apply
Is a Rush Turnaround Surcharge
Turn Around Time (TAT) is calendar days.

To Be Completed by Pace Analytical Client: Section C

Quote Reference:
Project Manager: Julie Borne
Project #:
Profile #: 1472

Required Client Information: Section D

Valid Matrix Codes: Water WT, Soil SL, Oil OL, Wipe WP, Air AIR, Tissue TS, Other OT

Item Number	SAMPLE ID (One character per box.)	Matrix Code	Date Collected	Time Collected	# Containers	Unpreserved	H2SO4	HNO3	HCl	NaOH	Na2S2O3	Methanol	TSS	Oil & Grease	Total Phenolics	Iron	Copper								REMARKS / Lab ID
01	1	WT																							
02	1	WT	7-12-06	0707	2	1			1					1											20458736
04	1 DISHKE	WT	7-12-06	0722	2	1			1					1											37
04	1 INTK	WT	7-12-06	0626	1	1																			38
05	1	WT																							
06	1	WT																							
07	1	WT																							
08	1 1	WT	7-12-06	0633	2	1			1					1											39
08	1 2	WT	7-12-06	0715	4	2			2					2											44
09	1 1	WT	7-12-06	0701	2	1			1					1											45
09	1 2	WT	7-12-06	0639	2	1			1					1											46
08	1 3	WT	-BG																						
11	1	WT																							
		WT																							
		WT																							

SHIPMENT METHOD	AIRBILL/SHIPPING DATE	NO. OF COOLERS	FED-EX	RELINQUISHED BY / AFFILIATION	DATE	TIME	ACCEPTED BY / AFFILIATION	DATE	TIME
				George Stafford	7/12/06	0830	Pace	7/12/06	0830
				[illegible]	7/12/06	1500	[illegible]	7/12/06	1500

SAMPLE CONDITION:

Temp in C	5.0
Received on Ice	(Y) N
Sealed Cooler	Y (N)
Sample Intact	(Y) N

SAMPLE NOTES:

All methods specified by Angus Contract
8011-2 Monthly Duplicate

Additional Comments:

SAMPLER NAME AND SIGNATURE

PRINT Name of SAMPLER: George Stafford

SIGNATURE of SAMPLER: George Stafford

DATE Signed: 7-12-2006

RODEMACHER POWER STATION

LPDES PERMIT LA00008036

Discharge	Description	Time AM/PM	Ph
001	Lake Rodemacher overflow to Bayou Jean DeJean		
201	Coal Sedimentation Pond	0707	6.95@ 26.7
301	Units 1,2,&3 once through cooling water,and seal well	0645	6.42@ 34.8°C
401	*Bottom Ash Pond, Fly Ash Pond,and Fly Ash Pile Runoff Through Secondary Settling System*	0722	7.93@ 28.2°
401-	Lake Intake	0626	6.37@ 27.3°C
501	Limestone pond and Petcoke/coal storage Pond		
601	Unit 1 Metal Cleaning Waste Pond		
111	Unit 2&3 Metal Cleaning Waste Pond		
701	Clarifier Sludge Pond		
801-1	Unit 1 Boiler Blowdown & Drains	0633	
801-2	Unit 2 Boiler Blowdown & Drains	0715	
901-1	Unit 1& 2 Floor & Roof Drains/well water	0701	
901-2	Unit 1 & 2 water plant waste	0639	
901-3	Unit 3 water plant waste,boiler B/D & floor drains		
101	Hydrostatic test waste water to internal outfalls		

	pH METER CALIBRATION		
Ph meter: 290- A	**Reagent**	**Reading**	**Calibrate To**
Serial No.: 001375	Buffer 7.000	7.007@21.9°C	7.000
Probe:	Buffer 10.000	10.054@21.9°C	10.000
	Buffer 4.000		
Refrigerator Temp.	Thermometer 1504-1A serial 904-1784	3.1 °C	Certified 5-4-90

DATE: 7-12-06

EMPLOYEE: Gerge Stafford

This information is to be maintained for a period of at least 3 years.. See LAC33:IX.2355.J.2.

Monthly Measurement Summary Report

Facility: RODEMACHER POWER STATION

Period: July 2006

		Min	Ave	Max
001 A	OVERFLOW FROM LAKE RODEMACHER			
	FLOW-001 A (RM)		0.0000	0.0000
	TEMPERATURE-001 A (RM)			0.0000
001 Q	OVERFLOW FROM LAKE RODEMACHER			
101 A	HYDROSTATIC TEST WASTEWATERS			
	BENZENE-101 A (RM)		0.0000	0.0000
	FLOW-101 A (RM)		0.0000	0.0000
	OIL AND GREASE-101 A (RM)			0.0000
	PH-101 A (RM)	0		0.0000
	TOC-101 A (RM)			0.0000
	TOTAL BTEX-101 A (RM)			0.0000
	TOTAL LEAD-101 A (RM)			0.0000
	TOTAL SUSP. SOLIDS-101 A (RM)			0.0000
111 A	CHEMICAL METAL CLEANING WASTE			
	COPPER-111 A (RM)		0.0000	0.0000
	FLOW-111 A (RM)			
	IRON-111 A (RM)		0.0000	0.0000
	OIL AND GREASE-111 A (RM)		0.0000	0.0000
	PH-111 A (RM)	0		0.0000
	TOTAL SUSP. SOLIDS-111 A (RM)		0.0000	0.0000
201 A	SEDIMENTATION POND DISCHARGES			
	FLOW-201 A (RM)		0.1660	0.1660
	OIL AND GREASE-201 A (RM)		< 5.0000	< 5.0000
	PH-201 A (RM)	6.88		6.9500
	TOTAL SUSP. SOLIDS-201 A (RM)		< 5.0000	6.0000
301 A	EFFLUENT FROM SEAL WELLS			
	FLOW-301 A (RM)		300.9755	332.8800

Monthly Measurement Summary Report

Facility: RODEMACHER POWER STATION

Period: July 2006

		Min	Ave	Max
301 A	EFFLUENT FROM SEAL WELLS			
	PH-301 A (RM)	6.35		6.4200
	TRC-301 A (RM)		0.0000	0.0000
401 A	FLY ASH, BOTTOM ASH, ASH MGT AREA			
	FLOW-401 A (RM)		1.9587	5.5700
	OIL AND GREASE-401 A (RM)		< 5.0000	< 5.0000
	PH-401 A (RM)	7.93		8.0100
	TSS DISCHARGE-401 A (RM)		4.5000	5.0000
	TSS FINAL-401 A (RM)		-1.5000	0.0000
	TSS INTAKE-401 A (RM)		6.0000	7.0000
501 A	UNIT 3 PETCOKE/COAL AND LIMESTONE PILE			
	FLOW-501 A (RM)		0.0000	0.0000
	PH-501 A (RM)	0		0.0000
	TOTAL SUSP. SOLIDS-501 A (RM)			0.0000
601 A	CHEMICAL METAL CLEANING WASTE			
	COPPER-601 A (RM)		0.0000	0.0000
	FLOW-601 A (RM)			
	IRON-601 A (RM)		0.0000	0.0000
	OIL AND GREASE-601 A (RM)			0.0000
	PH-601 A (RM)	0		0.0000
	TOTAL SUSP. SOLIDS-601 A (RM)			0.0000
701 A	CLARIFIER SLUDGE SEDIMENT POND			
	FLOW-701 A (RM)		0.0000	0.0000
	OIL AND GREASE-701 A (RM)			0.0000
	PH-701 A (RM)	0		0.0000
	TOTAL SUSP. SOLIDS-701 A (RM)			0.0000
801 A	BOILER BLOWDOWN & DRAINS			

Monthly Measurement Summary Report

Facility: RODEMACHER POWER STATION

Period: July 2006

		Min	Ave	Max
801 A	BOILER BLOWDOWN & DRAINS			
	FLOW-801 A (RM)		0.0381	0.1952
	O&G FINAL-801 A (RM)	<	5.0000	< 5.0000
	TSS FINAL-801 A (RM)	<	4.0000	< 4.0000
901 A	FLOOR AND ROOF DRAINS			
	FLOW-901 A (RM)		0.0664	0.1793
	O&G FINAL-901 A (RM)	<	5.0000	< 5.0000
	TSS FINAL-901 A (RM)	<	8.0746	< 10.5099

Monthly Measurement Details Report

Facility: RODEMACHER POWER STATION

Period: July 2006

OutFall: 201 A	Day	Value	X-Desc
SEDIMENTATION POND DISCHARGES			
FLOW-201 A (RM)			
	1	0.1660	
	2	0.1660	
	3	0.1660	
	4	0.1660	
	5	0.1660	
	6	0.1660	
	7	0.1660	
	8	0.1660	
	9	0.1660	
	10	0.1660	
	11	0.1660	
	12	0.1660	
	13	0.1660	
	14	0.1660	
	15	0.1660	
	16	0.1660	
	17	0.1660	
	18	0.1660	
	19	0.1660	
	20	0.1660	
	21	0.1660	
	22	0.1660	
	23	0.1660	
	24	0.1660	
	25	0.1660	
	26	0.1660	
	27	0.1660	
	28	0.1660	
	29	0.1660	
	30	0.1660	
	31	0.1660	
OIL AND GREASE-201 A (RM)			
	11	< 5.0000	
	12	< 5.0000	
PH-201 A (RM)			

Monthly Measurement Details Report

Facility: RODEMACHER POWER STATION

Period: July 2006

OutFall: 201 A	Day	Value	X-Desc
SEDIMENTATION POND DISCHARGES			
PH-201 A (RM)			
	11	6.8800	
	12	6.9500	
TOTAL SUSP. SOLIDS-201 A (RM)			
	11	< 4.0000	
	12	6.0000	

OutFall: 301 A	Day	Value	X-Desc
EFFLUENT FROM SEAL WELLS			
FLOW-301 A (RM)			
	1	246.9600	
	2	246.9600	
	3	311.4000	
	4	246.9600	
	5	246.9600	
	6	246.9600	
	7	246.9600	
	8	186.2400	
	9	206.4800	
	10	246.9600	
	11	246.9600	
	12	332.8800	
	13	332.8800	
	14	332.8800	
	15	332.8800	
	16	332.8800	
	17	332.8800	
	18	332.8800	
	19	332.8800	
	20	332.8800	
	21	332.8800	
	22	332.8800	
	23	332.8800	
	24	332.8800	
	25	332.8800	
	26	332.8800	

Monthly Measurement Details Report

Facility: RODEMACHER POWER STATION

Period: July 2006

OutFall: 301 A	Day	Value	X-Desc
EFFLUENT FROM SEAL WELLS			
FLOW-301 A (RM)			
	27	332.8800	
	28	332.8800	
	29	332.8800	
	30	325.7200	
	31	332.8800	
PH-301 A (RM)			
	11	6.3500	
	12	6.4200	
TRC-301 A (RM)			
	11	0.0000	
	12	0.0000	

OutFall: 401 A	Day	Value	X-Desc
FLY ASH, BOTTOM ASH, ASH MGT AREA			
FLOW-401 A (RM)			
	1	1.5600	
	2	5.0000	
	3	2.2800	
	4	3.9900	
	5	2.0800	
	6	1.5600	
	7	1.5600	
	8	0.0000	
	9	1.5600	
	10	1.5600	
	11	1.5600	
	12	1.5600	
	13	1.5600	
	14	1.5600	
	15	1.5600	
	16	2.7300	
	17	1.5600	
	18	1.5600	
	19	2.4500	
	20	1.5600	

Monthly Measurement Details Report

Facility: RODEMACHER POWER STATION

Period: July 2006

OutFall: 401 A	Day	Value	X-Desc
FLY ASH, BOTTOM ASH, ASH MGT AREA			
FLOW-401 A (RM)			
	21	1.5600	
	22	1.9900	
	23	1.5600	
	24	1.5600	
	25	1.5600	
	26	5.5700	
	27	1.5600	
	28	1.7300	
	29	1.5600	
	30	1.5600	
	31	1.7000	
OIL AND GREASE-401 A (RM)			
	11	< 5.0000	
	12	< 5.0000	
PH-401 A (RM)			
	11	8.0100	
	12	7.9300	
TSS DISCHARGE-401 A (RM)			
	11	5.0000	
	12	4.0000	
TSS FINAL-401 A (RM)			
	11	0.0000	
	12	-3.0000	
TSS INTAKE-401 A (RM)			
	11	5.0000	
	12	7.0000	

OutFall: 501 A	Day	Value	X-Desc
UNIT 3 PETCOKE/COAL AND LIMESTONE PILE			
FLOW-501 A (RM)			
	1	0.0000	
	2	0.0000	
	3	0.0000	
	4	0.0000	

Monthly Measurement Details Report

Facility: RODEMACHER POWER STATION

Period: July 2006

OutFall: 501 A	Day	Value	X-Desc
UNIT 3 PETCOKE/COAL AND LIMESTONE PILE			
FLOW-501 A (RM)			
	5	0.0000	
	6	0.0000	
	7	0.0000	
	8	0.0000	
	9	0.0000	
	10	0.0000	
	11	0.0000	
	12	0.0000	
	13	0.0000	
	14	0.0000	
	15	0.0000	
	16	0.0000	
	17	0.0000	
	18	0.0000	
	19	0.0000	
	20	0.0000	
	21	0.0000	
	22	0.0000	
	23	0.0000	
	24	0.0000	
	25	0.0000	
	26	0.0000	
	27	0.0000	
	28	0.0000	
	29	0.0000	
	30	0.0000	
	31	0.0000	

OutFall: 801 A	Day	Value	X-Desc
BOILER BLOWDOWN & DRAINS			
FLOW-801 A (RM)			
	1	0.0297	
	2	0.0297	
	3	0.0297	
	4	0.0297	
	5	0.0297	

Monthly Measurement Details Report

Facility: RODEMACHER POWER STATION

Period: July 2006

OutFall: 801 A	Day	Value	X-Desc
BOILER BLOWDOWN & DRAINS			
FLOW-801 A (RM)			
	6	0.0297	
	7	0.0256	
	8	0.0101	
	9	0.1601	
	10	0.1952	
	11	0.0202	
	12	0.0297	
	13	0.0297	
	14	0.0297	
	15	0.0297	
	16	0.0297	
	17	0.0297	
	18	0.0297	
	19	0.0297	
	20	0.0297	
	21	0.0297	
	22	0.0297	
	23	0.0297	
	24	0.0297	
	25	0.0297	
	26	0.0297	
	27	0.0297	
	28	0.0297	
	29	0.0297	
	30	0.0297	
	31	0.0297	
O&G UNIT 1-801 A (RM)			
	11	< 5.0000	
	12	< 5.0000	
O&G UNIT 2-801 A (RM)			
	11	< 5.0000	
	12	< 5.0000	
TSS UNIT 1-801 A (RM)			
	11	< 4.0000	
	12	< 4.0000	

Monthly Measurement Details Report

Facility: RODEMACHER POWER STATION

Period: July 2006

OutFall: 801 A	Day	Value	X-Desc
BOILER BLOWDOWN & DRAINS			
TSS UNIT 2-801 A (RM)			
	11	< 4.0000	
	12	< 4.0000	

OutFall: 901 A	Day	Value	X-Desc
FLOOR AND ROOF DRAINS			
FLOW-901 A (RM)			
	1	0.0482	
	2	0.1550	
	3	0.0696	
	4	0.1095	
	5	0.0719	
	6	0.0572	
	7	0.0482	
	8	0.0382	
	9	0.0430	
	10	0.0482	
	11	0.0652	
	12	0.0572	
	13	0.0482	
	14	0.0572	
	15	0.0492	
	16	0.0817	
	17	0.0572	
	18	0.0652	
	19	0.0825	
	20	0.0572	
	21	0.0482	
	22	0.0775	
	23	0.0572	
	24	0.0482	
	25	0.0492	
	26	0.1793	
	27	0.0572	
	28	0.0621	
	29	0.0572	
	30	0.0492	

Monthly Measurement Details Report

Facility: RODEMACHER POWER STATION

Period: July 2006

OutFall: 901 A	Day	Value	X-Desc
FLOOR AND ROOF DRAINS			
FLOW-901 A (RM)			
	31	0.0613	
O&G UNIT 1-901 A (RM)			
	11	< 5.0000	
	12	< 5.0000	
O&G UNIT 2-901 A (RM)			
	11	< 5.0000	
	12	< 5.0000	
TSS UNIT 1-901 A (RM)			
	11	4.0000	
	12	9.0000	
TSS UNIT 2-901 A (RM)			
	11	9.0000	
	12	14.0000	

RODEMACHER POWER STATION

LPDES PERMIT LA00008036

Discharge	Description	Time AM/PM	Ph
001	Lake Rodemacher overflow to Bayou Jean DeJean		
201	Coal Sedimentation Pond		
301	Units 1,2,&3 once through cooling water,and seal well		
401	*Bottom Ash Pond, Fly Ash Pond,and Fly Ash Pile Runoff Through Secondary Settling System*		
401-	Lake Intake		
501	Limestone pond and Petcoke/coal storage Pond		
601	Unit 1 Metal Cleaning Waste Pond		
111	Unit 2&3 Metal Cleaning Waste Pond		
701	Clarifier Sludge Pond		
801-1	Unit 1 Boiler Blowdown & Drains		
801-2	Unit 2 Boiler Blowdown & Drains		
901-1	Unit 1& 2 Floor & Roof Drains/well water		
901-2	Unit 1 & 2 water plant waste		
901-3	Unit 3 water plant waste,boiler B/D & floor drains		
101	Hydrostatic test waste water to internal outfalls		

Ph meter: 290- A

Serial No.: 001375

Probe: 41-1426

	pH METER CALIBRATION		
	Reagent	**Reading**	**Calibrate To**
	Buffer 7.000		
	Buffer 10.000		
	Buffer 4.000		
Refrigerator Temp.	**Thermometer 1504-1A serial 904-1784**		Certified 5-4-90

DATE:	
EMPLOYEE:	

This information is to be maintained for a period of at least 3 years. See LAC33:IX.2355.J.2.

APPENDIX E

EMERGENCY RESPONSE MANUAL

CLECO POWER LLC

RODEMACHER POWER STATION

EMERGENCY RESPONSE ACTION PLAN (ERAP)

SEPTEMBER 2006

EMERGENCY RESPONSE ACTION PLAN (ERAP)
Summary of Purpose and Use

Oil Spill Response Immediate Actions

1.	Stop the product flow	Act quickly to secure pumps, close valves, etc.
2.	Warn personnel	Enforce safety, and security measures.
3.	Shut off ignition sources	Motors, electrical circuits, open flames, etc.
4.	Initiate containment boom.	Around the tank and/or in the water with oil
5.	Notify the State Police	225/925-6595
6.	Notify NRC	1-800-424-8802
7.	Notify OSC	See ERAP
8.	Notify, other agencies and organizations as appropriate. See ERAP-1	

The Emergency Response Action Plan (ERAP) section of this document is designed to minimize hazards to human health or the environment from oil or chemical spills. The framework and contents of this ERAP section can also be utilized for emergency incidents relating to fires, explosions, failure of dams, medical emergencies, natural catastrophes, community disturbances, or any unplanned sudden or non-sudden releases of hazardous waste radiological, or hazardous waste constituents to air, soil or surface water. The provisions of the ERAP shall be carried out immediately whenever there is an emergency event, or signs of a potential emergency situation, that could threaten human health or the environment.

This ERAP is intended to help plant operations personnel to respond to emergency situations in a safe, effective, and efficient manner. It focuses on the notification, response, clean-up and disposal procedures relating to a spill or release event.

Per Section 1.1 of Appendix F of 40 CFR 112, the ERAP shall be made up of the following sections:

1. Qualified Individual (Emergency Response Coordinator [ERC]) Information (Section 1.2) partial **(See ERAP-1)**
2. Emergency Notification Phone List (Section 1.3.1) partial **(See ERAP-2)**
3. Spill Response Notification Form (Section 1.3.1) partial **(See ERAP-3)**
4. Response Equipment List and Location (Section 1.3.2) complete **(See ERAP-6)**
5. Response Equipment Testing and Deployment (Section 1.3.3) complete **(See ERAP-6)**
6. Facility Response Team (Section 1.3.4) partial **(See ERAP-1)**
7. Evacuation Plan (Section 1.3.5) condensed **(See ERAP-5)**
8. Immediate Actions (Section 1.7.1) complete **(See ERAP Summary)**
9. Facility Diagram (Section 1.9) complete **(See ERAP-4)**

EMERGENCY RESPONSE ACTION PLAN (ERAP)
Summary of Purpose and Use

ERAP Components	
ERAP-1	List of Contacts
ERAP-2	Notification Procedures
ERAP-3	Spill Response Notification Form
ERAP-4	Response Procedures
ERAP-5	Evacuation Procedures
ERAP-6	Emergency Equipment List

Designated Responsible Personnel - Spill Prevention:

Steve Lachney (First to be contacted)

Qualified Individuals are designated as Emergency Response Coordinators (ERCs) in the list of contact below. Qualified individuals include:

Steve Lachney – 1st to be contacted
Emergency Response Coordinator

Work Address:
275 Rodemacher Rd.
Lena, LA
318-793-1152

Response Time: 25 minutes

Robert St. Romain – 2nd to be contacted
Emergency Response Coordinator

Home Address:
1255 Main St..
Marksville, LA

Work Address:
275 Rodemacher Rd.
Lena, LA

Response Time: 45 minutes

Greg Bennett – 3rd to be contacted
Emergency Response Coordinator

Home Address:
530 Red Bayou Rd.
Lena, LA

Work Address:
275 Rodemacher Rd.
Lena, LA

Response Time: 10 minutes

All personnel referenced above are Qualified Individuals and can perform the following listed duties.

Qualified Individual's Duties

The qualified individual's duties must be described and be consistent with the minimum requirements in §112.20(h)(3)(ix) as follows:

(A) Activate internal alarms and hazard communication systems to notify all facility personnel.

(B) Notify all response personnel, as needed.

(C) Identify the character, exact source, amount, and extent of the release, as well as the other items needed for notification.

(D) Notify and provide necessary information to the appropriate Federal, State, and local authorities with designated response roles, including the National Response Center, State Emergency Response Commission, and Local Emergency Planning Committee (Note: The Louisiana State Police require first notification).

(E) Assess the interaction of the discharged substance with water and/or other substances stored at the facility and notify response personnel at the scene of that assessment.

(F) Assess the possible hazards to human health and the environment due to the release. This assessment must consider both the direct and indirect effects of the release (i.e., the effects of any toxic, irritating, or asphyxiating gases that may be generated, or the effects of any hazardous surface water runoffs from water or chemical agents used to control fire and heat-induced explosion).

(G) Assess and implement prompt removal actions to contain and remove the substance released.

(H) Coordinate rescue and response actions as previously arranged with all response personnel.

(I) Use authority to immediately access company funding to initiate cleanup activities.

(J) Direct cleanup activities until properly relieved of this responsibility.

ERAP-4
EMERGENCY RESPONSE PROCEDURES

INTERNAL

CONTACT ORDER		TITLE	PHONE NUMBERS		
			Office	Home	Mobile
Facility Personnel					
1	**Steve Lachney**	**Supervisor – Field Maintenance/ Coordinator (ERC)**	318.793.1152		**318.613.8162**
2	Robert St. Romain	Plant Manager **(Alt. ERC)**	318.793.1135	318.249.7866	318.308.7679
3	Greg Bennett	Plant O&M Spvr. **(Alt. ERC)**	318.793.1138	318.793.4741	318.308.2063
4	Halford, Terry	Spvr. Field Maintenance	318.793.1120	318.448.1976	318.308.7681
5	Chad Addison	Spvr. Field Maintenance	318.793.1169	318.449.9137	318.308.7680
6	Be Deshotel	Shift Team Leader	318.793.1146	318.793.5460	
7	Abby Blalock	Shift Team Leader	318.793.1146	318.627.5482	
8	David Powers	Shift Team Leader	318.793.1146	318.487.1588	
9	Barry Hilton	Shift Team Leader	318.793.1146	318.473.9657	
10	Barry Beebe	Sr. Pwr Plant Mtce Specialist	318.793.1127	318.793.4122	
11	Timmy Tatom	Lead Power Plant Mechanic	318.793.1124	318.793.5537	
12	George Stafford	Sr. Power Plant Chemist	318.793.1112	318.640.0948	
13	Buddy Blake	Sr. Power Plant Mechanic	318.793.1124	318.619.1199	
Corporate Environmental – Pineville General Office					
1	Robbie LaBorde	Gen. Mgr – Environmental	318.484.7753		318.308.9196
2	Paul Miller	Director - Environmental	318.484.7718	318.767.8741	318.308.1199
3	Charlie Van Hoof	Principal Env. Specialist (Water)	318.484.7632	318.776.9356	318.308.9198
4	Breen Croom	Principal Env. Specialist (Air)	318.484.7742	318.484.2501	318.308.9228
5	Ricky Nguyen	Sr. Env. Op. Specialist	318.793.1171	318.619.9303	318.308.8054
6	Michael Martin	Senior Env. Specialist (Wires)	318.484.7461	318.641.0251	318.308.1201
7	Robin McQuillin	Senior Env. Support Specialist	318.484.7616	337.589.5024	318.308.1200
8	Robert Knott	Senior Env. Oper. Specialist (Air)	318.484.7664	318.767.1713	318.483.2056
Corporate Communications – Pineville General Office					
1	Susan Broussard	Mgr – Corporate & Strategic Communications	318.484.7773	318.443.8099	318.308.7600
2	Mike Burns	Communication Representative	318.484.7663	318.442.4980	318.308.3895
3	Robbyn Cooper	Communications Coordinator	318.484.7136	318.640.3627	318.308.7604
4	Ann Jenkins	Communication Representative	318.484.7129	318.442.1931	318.308.9188
5	Franchesca Phoenix	Communications Coordinator	318.484.7467	318.445.8016	318.613.0823