DEPARTMENT OF ENVIRONMENTAL QUALITY

KATHLEEN BABINEAUX BLANCO
GOVERNOR

MIKE D. McDANIEL, Ph.D.
SECRETARY

Certified Mail No.:

Activity No.: PER20060001
Agency Interest No.: 18637

Mr. Michael Schoch
Regulatory, Environmental, and Safety Coordinator
Hilcorp Energy Company
Post Office Box 61229
Houston, Texas 77208-1229

RE: Permit Modification, Hog Bayou Field Facility, Hilcorp Energy Company
Grand Chenier, Cameron Parish, Louisiana

Dear Mr. Schoch:

This is to inform you that the permit modification request for the above referenced facility has been approved under LAC 33:III.501. The submittal was approved on the basis of the emissions reported and the approval in no way guarantees the design scheme presented will be capable of controlling the emissions as to the types and quantities stated. A new application must be submitted if the reported emissions are exceeded after operations begin. The synopsis, data sheets, and conditions are attached herewith.

It will be considered a violation of the permit if all proposed control measures and/or equipment are not installed and properly operated and maintained as specified in the application.

Also enclosed is a document entitled "General Information." Please be advised that this document contains a summary of facility-level information contained in LDEQ's TEMPO database and is not considered a part of the permit. Please review the information contained in this document for accuracy and completeness. If any changes are required or if you have questions regarding this document, you may contact Mr. David Ferrand, Environmental Assistance Division, at (225) 219-3247 or email your changes to facupdate@la.gov.

The permit number cited below and agency interest number cited above should be referenced in future correspondence regarding this facility.

Done this _____ day of _____, 2007.

Permit No.: 0560-00069-04

Sincerely,

Chuck Carr Brown, Ph.D.
Assistant Secretary

CCB:sbp

ENVIRONMENTAL **SERVICES**
: PO BOX 4313, BATON ROUGE, LA 70821-4313
P:225-219-3181 F:225-219-3309
WWW.DEQ.LOUISIANA.GOV

AIR PERMIT BRIEFING SHEET
AIR PERMITS DIVISION
LOUISIANA DEPARTMENT OF ENVIRONMENTAL QUALITY

Hog Bayou Field Facility
Agency Interest No.: 18637
Hilcorp Energy Company
Grand Chenier, Cameron Parish, Louisiana

I. BACKGROUND

Hog Bayou Field Facility is an existing oil and gas production facility owned and operated by Hilcorp Energy Company (Hilcorp). The Hog Bayou Field Facility currently operates under Standard Oil and Gas Permit No. 0560-00069-03, issued January 28, 2005.

II. ORIGIN

A permit application and Emission Inventory Questionnaire (EIQ) dated August 28, 2006, were received requesting a permit modification. Additional information dated January 8, 2007, and January 18, 2007, was also received.

III. DESCRIPTION

This facility functions as a typical oil and gas production site. Initially, production is separated into crude oil, saltwater, and natural gas. The natural gas is dried via a glycol dehydration unit (Emission Point Nos. 06 and 15), sweetened via an amine sweetening unit (Emission Point Nos. AMINEX and AMINVNT), and then compressed using a 1,340 horsepower engine and a 1,775 horsepower engine (Emission Point Nos. COMP1 and COMP3) for further transmission via pipeline. Saltwater is stored at the facility in two 1,500-barrel (bbl) saltwater storage tanks (Emission Point Nos. 20 and 21) prior to deep well injection. The facility also is comprised of an additional "standby" 12,000-bbl saltwater storage tank as well as two "standby" methanol tanks, 300-bbl and 300-gallon. Crude Oil is directed to two 300-bbl oil storage tanks (Emission Point Nos. 08 and 09), then transferred offsite via pipeline. This site produces approximately 2,190 MM scf of natural gas and 292,000 bbls of crude oil per year.

In addition to the aforementioned emission sources, the facility is comprised of three natural gas operated pneumatic oil transfer pumps (Emission Point Nos. 24, 25, and 26), three natural gas operated pneumatic chemical injection pumps (Emission Point Nos. 27, 28, and 29), fugitive equipment leaks (Emission Point No. 11) as well as an emergency use 286-bbl sump tank and an emergency use flash gas vent.

Hilcorp's Hog Bayou Field Facility is no longer eligible for the Standard Oil and Gas permit due to the following proposed modifications:

- Addition of Amine Reboiler Burner Exhaust (Emission Point No. AMINEX),
- Addition of Amine Reboiler Still Column Vent and Flash Tank (Emission Point No. AMINVNT),
- Updated VOC emissions from Glycol Reboiler Still Vent-Condenser (Emission Point No. 15), and
- Establish recordkeeping requirements to demonstrate exemption from 40 CFR 60 Subpart LLL and 40 CFR 63 Subpart HH standards.

AIR PERMIT BRIEFING SHEET
AIR PERMITS DIVISION
LOUISIANA DEPARTMENT OF ENVIRONMENTAL QUALITY

Hog Bayou Field Facility
Agency Interest No.: 18637
Hilcorp Energy Company
Grand Chenier, Cameron Parish, Louisiana

The facility's proposed modification results in oil production being at 97% of a major source threshold for VOC emissions. Therefore, an oil throughput limit of 292,000 bbls per year is being established to ensure that minor source emissions are maintained.

Estimated emissions from this facility in tons per year are as follows:

Pollutant	Before	After	Change
PM_{10}	0.05	0.10	+ 0.05
SO_2	0.06	0.06	---
NO_X	31.90	32.55	+ 0.65
CO	67.81	68.35	+ 0.54
VOC [1]	93.37	97.87	+ 4.50

[1]VOC speciation in tons per year:

LAC 33:III. Chapter 51 Toxic Air Pollutants TAP's	Emissions
Benzene	3.728
Ethyl benzene	0.192
Formaldehyde	5.058
n-Hexane	0.015
Toluene	0.381
Xylenes	0.509
Total TAP's	9.883
Other VOC's	87.987
Total VOC	97.870

IV. TYPE OF REVIEW

This permit was reviewed for compliance with Louisiana Air Quality Regulations, New Source Performance Standards (NSPS), and National Emission Standards for Hazardous Air Pollutants (NESHAP). Prevention of Significant Deterioration (PSD) does not apply.

This facility is a minor source of LAC 33:III.Chapter 51 Toxic Air Pollutants (TAPs).

AIR PERMIT BRIEFING SHEET
AIR PERMITS DIVISION
LOUISIANA DEPARTMENT OF ENVIRONMENTAL QUALITY

Hog Bayou Field Facility
Agency Interest No.: 18637
Hilcorp Energy Company
Grand Chenier, Cameron Parish, Louisiana

V. PUBLIC NOTICE

A notice requesting public comment on the permit was published in *The Advocate*, Baton Rouge, on XXXXXXX, and in the XXXXX, on XXXXX, and submitted to the XXXX Parish Library, XXXX Branch on XXXX. A copy of the public notice was mailed to concerned citizens listed in the Office of Environmental Services Public Notice Mailing List on XXXX.

VI. EFFECTS ON AMBIENT AIR

Dispersion Model(s) Used: None

Pollutant	Time Period	Calculated Maximum Ground Level Concentration	Louisiana Ambient Air Quality Standard (NAAQS)

VII. GENERAL CONDITION XVII ACTIVITIES

None.

VIII. INSIGNIFICANT ACTIVITIES

ID No.:	Description	Citation
01	Line Heater, 0.5 MM BTU/hr	LAC 33:III.501.B.5.A.5
02	Line Heater, 0.5 MM BTU/hr	LAC 33:III.501.B.5.A.5
03	Line Heater, 0.75 MM BTU/hr	LAC 33:III.501.B.5.A.5
04	Line Heater, 1.5 MM BTU/hr	LAC 33:III.501.B.5.A.1
05	Line Heater, 1.5 MM BTU/hr	LAC 33:III.501.B.5.A.1
07	Heater Treater, 0.5 MM BTU/hr	LAC 33:III.501.B.5.A.5
HT1	Heater Treater, 0.5 MM BTU/hr	LAC 33:III.501.B.5.A.5

LOUISIANA AIR EMISSION PERMIT
GENERAL CONDITIONS

I. This permit is issued on the basis of the emissions reported in the application for approval of emissions and in no way guarantees that the design scheme presented will be capable of controlling the emissions to the type and quantities stated. Failure to install, properly operate and/or maintain all proposed control measures and/or equipment as specified in the application and supplemental information shall be considered a violation of the permit and LAC 33:III.501. If the emissions are determined to be greater than those allowed by the permit (e.g. during the shakedown period for new or modified equipment) or if proposed control measures and/or equipment are not installed or do not perform according to design efficiency, an application to modify the permit must be submitted. All terms and conditions of this permit shall remain in effect unless and until revised by the permitting authority.

II. The permittee is subject to all applicable provisions of the Louisiana Air Quality Regulations. Violation of the terms and conditions of the permit constitutes a violation of these regulations.

III. The Emission Rates for Criteria Pollutants, Emission Rates for TAP/HAP & Other Pollutants, and Specific Requirements sections or, where included, Emission Inventory Questionnaire sheets establish the emission limitations and are a part of the permit. Any operating limitations are noted in the Specific Requirements or, where included, Tables 2 and 3 of the permit. The synopsis is based on the application and Emission Inventory Questionnaire dated August 28, 2006, along with supplemental information dated January 8, 2007, and January 18, 2007.

IV. This permit shall become invalid, for the sources not constructed, if:

A. Construction is not commenced, or binding agreements or contractual obligations to undertake a program of construction of the project are not entered into, within two (2) years (18 months for PSD permits) after issuance of this permit, or;

B. If construction is discontinued for a period of two (2) years (18 months for PSD permits) or more.

The administrative authority may extend this time period upon a satisfactory showing that an extension is justified.

This provision does not apply to the time period between construction of the approved phases of a phased construction project. However, each phase must commence construction within two (2) years (18 months for PSD permits) of its projected and approved commencement date.

V. The permittee shall submit semiannual reports of progress outlining the status of construction, noting any design changes, modifications or alterations in the construction schedule which have or may have an effect on the emission rates or ambient air quality levels. These reports shall continue to be submitted until such time as construction is certified as being complete. Furthermore, for any significant change in the design, prior approval shall be obtained from the Office of Environmental Services, Air Permits Division.

VI. The permittee shall notify the Department of Environmental Quality, Office of Environmental Services, Air Permits Division within ten (10) calendar days from the date that construction is certified as complete and the estimated date of start-up of operation. The appropriate Regional Office shall also be so notified within the same time frame.

LOUISIANA AIR EMISSION PERMIT
GENERAL CONDITIONS

VII. Any emissions testing performed for purposes of demonstrating compliance with the limitations set forth in paragraph III shall be conducted in accordance with the methods described in the Specific Conditions and, where included, Tables 1, 2, 3, 4, and 5 of this permit. Any deviation from or modification of the methods used for testing shall have prior approval from the Office of Environmental Assessment, Air Quality Assessment Division.

VIII. The emission testing described in paragraph VII above, or established in the specific conditions of this permit, shall be conducted within sixty (60) days after achieving normal production rate or after the end of the shakedown period, but in no event later than 180 days after initial start-up (or restart-up after modification). The Office of Environmental Assessment, Air Quality Assessment Division shall be notified at least (30) days prior to testing and shall be given the opportunity to conduct a pretest meeting and observe the emission testing. The test results shall be submitted to the Air Quality Assessment Division within sixty (60) days after the complete testing. As required by LAC 33:III.913, the permittee shall provide necessary sampling ports in stacks or ducts and such other safe and proper sampling and testing facilities for proper determination of the emission limits.

IX. The permittee shall, within 180 days after start-up and shakedown of each project or unit, report to the Office of Environmental Compliance, Enforcement Division any significant difference in operating emission rates as compared to those limitations specified in paragraph III. This report shall also include, but not be limited to, malfunctions and upsets. A permit modification shall be submitted, if necessary, as required in Condition I.

X. The permittee shall retain records of all information resulting from monitoring activities and information indicating operating parameters as specified in the specific conditions of this permit for a minimum of at least five (5) years.

XI. If for any reason the permittee does not comply with, or will not be able to comply with, the emission limitations specified in this permit, the permittee shall provide the Office of Environmental Compliance, Enforcement Division with a written report as specified below.

A. A written report shall be submitted within 7 days of any emission in excess of permit requirements by an amount greater than the Reportable Quantity established for that pollutant in LAC 33.I.Chapter 39.

B. A written report shall be submitted within 7 days of the initial occurrence of any emission in excess of permit requirements, regardless of the amount, where such emission occurs over a period of seven days or longer.

C. A written report shall be submitted quarterly to address all emission limitation exceedances not included in paragraphs A or B above. The schedule for submittal of quarterly reports shall be no later than the dates specified below for any emission limitation exceedances occurring during the corresponding specified calendar quarter:

1. Report by June 30 to cover January through March
2. Report by September 30 to cover April through June
3. Report by December 31 to cover July through September
4. Report by March 31 to cover October through December

D. Each report submitted in accordance with this condition shall contain the following information:

1. Description of noncomplying emission(s);
2. Cause of noncompliance;
3. Anticipated time the noncompliance is expected to continue, or if corrected, the duration of the period of noncompliance;
4. Steps taken by the permittee to reduce and eliminate the noncomplying emissions; and
5. Steps taken by the permittee to prevent recurrences of the noncomplying emissions.

E. Any written report submitted in advance of the timeframes specified above, in accordance with an applicable regulation, may serve to meet the reporting requirements of this condition provided all information specified above is included. For Part 70 sources, reports submitted in accordance with Part 70 General Condition R shall serve to meet the requirements of this condition provided all specified information is included. Reporting under this condition does not relieve the permittee from the reporting requirements of any applicable regulation, including LAC 33.I.Chapter 39, LAC 33.III.Chapter 9, and LAC 33.III.5107.

XII. Permittee shall allow the authorized officers and employees of the Department of Environmental Quality, at all reasonable times and upon presentation of identification, to:

A. Enter upon the permittee's premises where regulated facilities are located, regulated activities are conducted or where records required under this permit are kept;

B. Have access to and copy any records that are required to be kept under the terms and conditions of this permit, the Louisiana Air Quality Regulations, or the Act;

C. Inspect any facilities, equipment (including monitoring methods and an operation and maintenance inspection), or operations regulated under this permit; and

D. Sample or monitor, for the purpose of assuring compliance with this permit or as otherwise authorized by the Act or regulations adopted thereunder, any substances or parameters at any location.

XIII. If samples are taken under Section XII.D. above, the officer or employee obtaining such samples shall give the owner, operator or agent in charge a receipt describing the sample obtained. If requested prior to leaving the premises, a portion of each sample equal in volume or weight to the portion retained shall be given to the owner, operator or agent in charge. If an analysis is made of such samples, a copy of the analysis shall be furnished promptly to the owner, operator or agency in charge.

XIV. The permittee shall allow authorized officers and employees of the Department of Environmental Quality, upon presentation of identification, to enter upon the permittee's premises to investigate potential or alleged violations of the Act or the rules and regulations adopted thereunder. In such investigations, the permittee shall be notified at the time entrance is requested of the nature of the suspected violation. Inspections under this subsection shall be limited to the aspects of alleged violations. However, this shall not in any way preclude prosecution of all violations found.

LOUISIANA AIR EMISSION PERMIT
GENERAL CONDITIONS

XV. The permittee shall comply with the reporting requirements specified under LAC 33:III.919 as well as notification requirements specified under LAC 33:III.927.

XVI. In the event of any change in ownership of the source described in this permit, the permittee and the succeeding owner shall notify the Office of Environmental Services, Air Permits Division, within ninety (90) days after the event, to amend this permit.

XVII. Very small emissions to the air resulting from routine operations, that are predictable, expected, periodic, and quantifiable and that are submitted by the permitted facility and approved by the Air Permits Division are considered authorized discharges. Approved activities are noted in the General Condition XVII Activities List of this permit. To be approved as an authorized discharge, these very small releases must:

1. Generally be less than 5 TPY
2. Be less than the minimum emission rate (MER)
3. Be scheduled daily, weekly, monthly, etc., or
4. Be necessary prior to plant startup or after shutdown [line or compressor pressuring/depressuring for example]

These releases are not included in the permit totals because they are small and will have an insignificant impact on air quality. This general condition does not authorize the maintenance of a nuisance, or a danger to public health and safety. The permitted facility must comply with all applicable requirements, including release reporting under LAC 33:I.3901.

XVIII. Provisions of this permit may be appealed in writing pursuant to La. R.S. 30:2024(A) within 30 days from receipt of the permit. Only those provisions specifically appealed will be suspended by a request for hearing, unless the secretary or the assistant secretary elects to suspend other provisions as well. Construction cannot proceed except as specifically approved by the secretary or assistant secretary. A request for hearing must be sent to the following:

Attention: Office of the Secretary, Legal Services Division
La. Dept. of Environmental Quality
Post Office Box 4302
Baton Rouge, Louisiana 70821-4302

XIX. Certain Part 70 general conditions may duplicate or conflict with state general conditions. To the extent that any Part 70 conditions conflict with state general conditions, then the Part 70 general conditions control. To the extent that any Part 70 general conditions duplicate any state general conditions, then such state and Part 70 provisions will be enforced as if there is only one condition rather than two conditions.

LDEQ-EDMS Document 35695808, Page 11 of 185

General Information

AI ID: 18637 Hog Bayou Field Facility
Activity Number: PER20060001
Permit Number: 0560-00069-04
Air - Minor Source/Small Source Mod

Also Known As:

ID	Name	User Group	Start Date
0560-00069	Hog Bayou Field Facility	CDS Number	03-12-2001
73-0400345	Phillips Petroleum Co - Hog Bayou Field	Federal Tax ID	11-21-1999
LAG33A187	LPDES #	LPDES Permit #	02-14-2006
WP2491	WPC File Number	LWDPS Permit #	05-22-2003
	Hilcorp Energy Co	Multimedia	07-15-2003
5722	Phillips Petroleum Co - Hog Bayou Field	Water Permitting	11-21-1999

Physical Location: 8 Mi SW of
Grand Chenier, LA 70000

Main FAX: 7132092401
Main Phone: 7132092400

Mailing Address: 1201 Louisiana St Ste 1400
Houston, TX 77002

Location of Front Gate: 29° 43' 31" latitude, 92° 59' 23" longitude, Coordinate Method: Interpolation - Map, Coordinate Datum: NAD83

Related People:

Name	Mailing Address	Phone (Type)	Relationship
James Buzan	PO Box 51107 Lafayette, LA 705051107	3182614142 (WP)	Accident Prevention Contact for
James Buzan	PO Box 51107 Lafayette, LA 705051107	3182614142 (WP)	Accident Prevention Billing Party for
Michael Schoch	PO Box 61229 Houston, TX 772081229	7132092416 (WP)	Responsible Official for
Michael Schoch	PO Box 61229 Houston, TX 772081229	7133121838 (DP)	Responsible Official for
Michael Schoch	PO Box 61229 Houston, TX 772081229	7132892756 (WF)	Responsible Official for

Related Organizations:

Name	Address	Phone (Type)	Relationship
Hilcorp Energy Co	1201 Louisiana St Ste 1400 Houston, TX 77002	7132092416 (WP)	Air Billing Party for
Hilcorp Energy Co	1201 Louisiana St Ste 1400 Houston, TX 77002	7132092420 (WF)	Air Billing Party for
Hilcorp Energy Co	1201 Louisiana St Ste 1400 Houston, TX 77002	7132092416 (WP)	Operates
Hilcorp Energy Co	1201 Louisiana St Ste 1400 Houston, TX 77002	7132092420 (WF)	Operates
Hilcorp Energy Co	1201 Louisiana St Ste 1400 Houston, TX 77002	7132092416 (WP)	Owns
Hilcorp Energy Co	1201 Louisiana St Ste 1400 Houston, TX 77002	7132092420 (WF)	Owns
Hilcorp Energy Co	1201 Louisiana St Ste 1400 Houston, TX 77002	7132092416 (WP)	Water Billing Party for
Hilcorp Energy Co	1201 Louisiana St Ste 1400 Houston, TX 77002	7132092420 (WF)	Water Billing Party for

SIC Codes: 1311, Crude petroleum and natural gas

Note: This report entitled "General Information" contains a summary of facility-level information contained in LDEQ's TEMPO database for this facility and is not considered a part of the permit. Please review the information contained in this document for accuracy and completeness. If any changes are required or if you have questions regarding this document, you may contact Mr. David Ferrand, Environmental Assistance Division, at (225) 219-3247 or email your changes to facupdate@la.gov.

INVENTORIES

AI ID: 18637 - Hog Bayou Field Facility
Activity Number: PER20060001
Permit Number: 0560-00069-04
Air - Minor Source/Small Source Mod

Subject Item Inventory:

ID	Description	Tank Volume	Max. Operating Rate	Normal Operating Rate	Contents	Operating Time
EQT001	06 - Glycol Reboiler Burner		1.2 MM BTU/hr	1.2 MM BTU/hr		8760 hr/yr (All Year)
EQT002	08 - Oil Storage Tank	300 bbl		146000 bbl/yr		8760 hr/yr (All Year)
EQT003	09 - Oil Storage Tank	300 bbl		146000 bbl/yr		8760 hr/yr (All Year)
EQT004	10 - Saltwater Storage Tank (standby)	12000 bbl				(None Specified)
EQT005	15 - Glycol Reboiler Still Vent-Condenser		6 MM ft^3/day	6 MM ft^3/day		8760 hr/yr (All Year)
EQT006	20 - Saltwater Storage Tank	1500 bbl		1460 bbl/yr		8760 hr/yr (All Year)
EQT007	21 - Saltwater Storage Tank	1500 bbl		1460 bbl/yr		8760 hr/yr (All Year)
EQT008	16 - Flash Gas Emergency Vent					(None Specified)
EQT009	17 - Methanol Tank (standby)	300 bbl				(None Specified)
EQT010	18 - Methanol Day Tank (standby)	300 gallons				(None Specified)
EQT011	22 - Emergency Sump Tank	286 bbl				8760 hr/yr (All Year)
EQT012	24 - Gas Operated Pneumatic Transfer Pump			60 ft^3/min		52 hr/yr (All Year)
EQT013	25 - Gas Operated Pneumatic Transfer Pump			120 ft^3/min		52 hr/yr (All Year)
EQT014	26 - Gas Operated Pneumatic Transfer Pump			120 ft^3/min		52 hr/yr (All Year)
EQT015	27 - Gas Operated Chemical Injection Pump			.24 ft^3/min		8760 hr/yr (All Year)
EQT016	28 - Gas Operated Chemical Injection Pump			.24 ft^3/min		8760 hr/yr (All Year)
EQT017	29 - Gas Operated Chemical Injection Pump			.24 ft^3/min		8760 hr/yr (All Year)
EQT018	COMP1 - Compressor Engine G3516 TALE		1340 horsepower	1340 horsepower		8760 hr/yr (All Year)
EQT019	COMP3 - Compressor Engine 3606		1775 horsepower	1775 horsepower		8760 hr/yr (All Year)
EQT020	AMINEX - Amine Reboiler Burner Exhaust			1.5 MM BTU/hr		8760 hr/yr (All Year)
EQT021	AMINVNT - Amine Reboiler Still Column Vent and Flash Tank			1.3 MM ft^3/day		8760 hr/yr (All Year)
EQT022						(None Specified)
FUG001	11 - Fugitives					8760 hr/yr (All Year)

Subject Item Groups:

ID	Description	Included Components (from Above)
GRP001	Standby Tanks and Emergency Sources	EQT4 10 - Saltwater Storage Tank (standby)
GRP001	Standby Tanks and Emergency Sources	EQT8 16 - Flash Gas Emergency Vent
GRP001	Standby Tanks and Emergency Sources	EQT11 22 - Emergency Sump Tank
GRP001	Standby Tanks and Emergency Sources	EQT17 29 - Gas Operated Chemical Injection Pump
GRP001	Standby Tanks and Emergency Sources	EQT18 COMP1 - Compressor Engine G3516 TALE
GRP002	Entire Facility	EQT1 06 - Glycol Reboiler Burner
GRP002	Entire Facility	EQT2 08 - Oil Storage Tank
GRP002	Entire Facility	EQT3 09 - Oil Storage Tank
GRP002	Entire Facility	EQT4 10 - Saltwater Storage Tank (standby)
GRP002	Entire Facility	EQT5 15 - Glycol Reboiler Still Vent-Condenser

LDEQ-EDMS Document 35695808, Page 12 of 185

LDEQ-EDMS Document 35695808, Page 13 of 185

INVENTORIES

AI ID: 18637 - Hog Bayou Field Facility
Activity Number: PER20060001
Permit Number: 0560-00069-04
Air - Minor Source/Small Source Mod

Subject Item Groups:

ID	Description	Included Components (from Above)
GRP002	Entire Facility	EQT6 20 - Saltwater Storage Tank
GRP002	Entire Facility	EQT7 21 - Saltwater Storage Tank
GRP002	Entire Facility	EQT8 16 - Flash Gas Emergency Vent
GRP002	Entire Facility	EQT9 17 - Methanol Tank (standby)
GRP002	Entire Facility	EQT10 18 - Methanol Day Tank (standby)
GRP002	Entire Facility	EQT11 22 - Emergency Sump Tank
GRP002	Entire Facility	EQT12 24 - Gas Operated Pneumatic Transfer Pump
GRP002	Entire Facility	EQT13 25 - Gas Operated Pneumatic Transfer Pump
GRP002	Entire Facility	EQT14 26 - Gas Operated Pneumatic Transfer Pump
GRP002	Entire Facility	EQT15 27 - Gas Operated Chemical Injection Pump
GRP002	Entire Facility	EQT16 28 - Gas Operated Chemical Injection Pump
GRP002	Entire Facility	EQT17 29 - Gas Operated Chemical Injection Pump
GRP002	Entire Facility	EQT18 COMP1 - Compressor Engine G3516 TALE
GRP002	Entire Facility	EQT19 COMP3 - Compressor Engine 3606
GRP002	Entire Facility	EQT20 AMINEX - Amine Reboiler Burner Exhaust
GRP002	Entire Facility	EQT21 AMINVNT - Amine Reboiler Still Column Vent and Flash Tank
GRP002	Entire Facility	FUG1 11 - Fugitives
GRP003	Oil Production Limitation	EQT2 08 - Oil Storage Tank
GRP003	Oil Production Limitation	EQT3 09 - Oil Storage Tank

Relationships:

Subject Item	Relationship	Subject Item
EQT1 06 - Glycol Reboiler Burner	Controls emissions from	EQT5 15 - Glycol Reboiler Still Vent-Condenser

Stack Information:

ID		Velocity (ft/sec)	Flow Rate (cubic ft/min-actual)	Diameter (feet)	Discharge Area (square feet)	Height (feet)	Temperature (oF)
EQT001	06 - Glycol Reboiler Burner	3023.37	98768.45	.8		56	515
EQT002	08 - Oil Storage Tank						
EQT003	09 - Oil Storage Tank						
EQT004	10 - Saltwater Storage Tank (standby)						
EQT006	20 - Saltwater Storage Tank						
EQT007	21 - Saltwater Storage Tank						
EQT009	17 - Methanol Tank (standby)						
EQT010	18 - Methanol Day Tank (standby)						
EQT011	22 - Emergency Sump Tank						
EQT018	COMP1 - Compressor Engine G3516 TALE	62.86	2981	1		20	855
EQT019	COMP3 - Compressor Engine 3606	258.07	12238	1		20	867
EQT020	AMINEX - Amine Reboiler Burner Exhaust	14.57	476	.8		56	500

LDEQ-EDMS Document 35695808, Page 14 of 185

INVENTORIES

AI ID: 18637 - Hog Bayou Field Facility
Activity Number: PER20060001
Permit Number: 0560-00069-04
Air - Minor Source/Small Source Mod

Stack Information:

ID		Velocity (ft/sec)	Flow Rate (cubic ft/min-actual)	Diameter (feet)	Discharge Area (square feet)	Height (feet)	Temperature (oF)
EQT021	AMINVNT - Amine Reboiler Still Column Vent and Flash Tank						

Fee Information:

Subj Item Id	Multiplier	Units Of Measure	Fee Desc
GRP002			0040 - Crude Oil and Natural Gas Production (Less than 100 T/Yr Source)

EMISSION RATES FOR CRITERIA POLLUTANTS

AI ID: 18637 - Hog Bayou Field Facility
Activity Number: PER20060001
Permit Number: 0560-00069-04
Air - Minor Source/Small Source Mod

All phases

	PM_{10}			SO_2			NOx			CO			VOC		
Subject Item	Avg lb/hr	Max lb/hr	Tons/Year	Avg lb/hr	Max lb/hr	Tons/Year	Avg lb/hr	Max lb/hr	Tons/Year	Avg lb/hr	Max lb/hr	Tons/Year	Avg lb/hr	Max lb/hr	Tons/Year
EQT 001 06	0.01	0.01	0.04	< 0.01	< 0.01	< 0.01	0.12	0.12	0.52	0.10	0.10	0.43	0.01	0.01	0.03
EQT 002 08													8.58	8.58	37.60
EQT 003 09													8.58	8.58	37.60
EQT 005 15													0.02	0.02	0.10
EQT 006 20													0.09	0.09	0.38
EQT 007 21													0.09	0.09	0.38
EQT 012 24													12.87	12.87	0.34
EQT 013 25													25.74	25.74	0.67
EQT 014 26													25.74	25.74	0.67
EQT 015 27													0.05	0.05	0.23
EQT 016 28													0.05	0.05	0.23
EQT 017 29													0.05	0.05	0.23
EQT 018 COMP1	< 0.01	< 0.01	< 0.01	0.01	0.01	0.02	4.43	4.43	19.40	5.61	5.61	24.57	0.27	0.27	1.16
EQT 019 COMP3	< 0.01	< 0.01	< 0.01	0.01	0.01	0.03	2.74	2.74	11.99	9.77	9.77	42.81	2.82	2.82	12.33
EQT 020 AMINEX	0.01	0.01	0.05	< 0.01	< 0.01	< 0.01	0.15	0.15	0.64	0.12	0.12	0.54	0.01	0.01	0.04
EQT 021 AMINVNT													1.01	1.01	4.44
FUG 001 11													0.33	0.33	1.44

Note: Emission rates in bold are from alternate scenarios and are not included in permitted totals

LDEQ-EDMS Document 35695808, Page 15 of 185

LDEQ-EDMS Document 35695808, Page 16 of 185

EMISSION RATES FOR CRITERIA POLLUTANTS

AI ID: 18637 - Hog Bayou Field Facility
Activity Number: PER20060001
Permit Number: 0560-00069-04
Air - Minor Source/Small Source Mod

All phases

Permit Phase Totals:

PM10: 0.10 tons/yr

SO2: 0.06 tons/yr

NOx: 32.55 tons/yr

CO: 68.35 tons/yr

VOC: 97.87 tons/yr

Emission rates Notes:

EMISSION RATES FOR TAP/HAP & OTHER POLLUTANTS

AI ID: 18637 - Hog Bayou Field Facility
Activity Number: PER20060001
Permit Number: 0560-00069-04
Air - Minor Source/Small Source Mod

All phases

	Benzene			Ethyl benzene			Formaldehyde			Toluene			Xylene (mixed isomers)		
Subject Item	Avg lb/hr	Max lb/hr	Tons/Year	Avg lb/hr	Max lb/hr	Tons/Year	Avg lb/hr	Max lb/hr	Tons/Year	Avg lb/hr	Max lb/hr	Tons/Year	Avg lb/hr	Max lb/hr	Tons/Year
EQT 002 08	0.011	0.011	0.046	0.008	0.008	0.035				0.020	0.020	0.088	0.050	0.050	0.219
EQT 003 09	0.011	0.011	0.046	0.008	0.008	0.035				0.020	0.020	0.088	0.050	0.050	0.219
EQT 005 15	0.006	0.006	0.028	0.001	0.001	0.005				0.003	0.003	0.014	0.005	0.005	0.022
EQT 006 20										< 0.001	< 0.001	0.001	0.001	0.001	0.002
EQT 007 21										< 0.001	< 0.001	0.001	0.001	0.001	0.002
EQT 018 COMP1							0.497	0.497	2.176						
EQT 019 COMP3							0.658	0.658	2.882						
EQT 021 AMINVNT	0.821	0.821	3.599	0.026	0.026	0.116				0.039	0.039	0.173	0.009	0.009	0.041
FUG 001 11	0.002	0.002	0.009	< 0.001	< 0.001	0.001				0.004	0.004	0.016	0.001	0.001	0.004

LDEQ-EDMS Document 35695808, Page 17 of 185

LDEQ-EDMS Document 35695808, Page 18 of 185

EMISSION RATES FOR TAP/HAP & OTHER POLLUTANTS

AI ID: 18637 - Hog Bayou Field Facility
Activity Number: PER20060001
Permit Number: 0560-00069-04
Air - Minor Source/Small Source Mod

All phases

	n-Hexane		
Subject Item	**Avg lb/hr**	**Max lb/hr**	**Tons/Year**
EQT 002 08			
EQT 003 09			
EQT 005 15	< 0.001	< 0.001	0.001
EQT 006 20			
EQT 007 21			
EQT 018 COMP1			
EQT 019 COMP3			
EQT 021 *AMINVNT*	0.004	0.004	0.014
FUG 001 11			

Note: Emission rates in bold are from alternate scenarios and are not included in permitted totals

Permit Parameter Totals:

Benzene: 3.728 tons/yr

Ethyl benzene: 0.192 tons/yr

Formaldehyde: 5.058 tons/yr

n-Hexane: 0.015 tons/yr

Toluene: 0.381 tons/yr

Xylene (mixed isomers): 0.509 tons/yr

Emission Rates Notes:

EQT 005 Benzene Tons/Year . Benzene emissions shall be controlled by *installing the glycol dehydration system with a flash tank and condenser followed by a vapor recovery unit* routed to the glycol reboiler burner. Noncompliance with this limitation and control requirement is a reportable violation of the permit and may result in the affected source being subject to the standards as specified in 40 CFR 63 Subpart HH. Notify the Office of Environmental Compliance, Enforcement Division if benzene emissions exceeds the maximum listed in this specific condition for any twelve consecutive month period Which Months: All Year

LDEQ-EDMS Document 35695808, Page 19 of 185

SPECIFIC REQUIREMENTS

AI ID: 18637 - Hog Bayou Field Facility
Activity Number: PER20060001
Permit Number: 0560-00069-04
Air - Minor Source/Small Source Mod

EQT001 06 - Glycol Reboiler Burner

1 Opacity <= 20 percent, except during the cleaning of a fire box or building of a new fire, soot blowing or lancing, charging of an incinerator, equipment changes, ash removal or rapping of precipitators, which may have an opacity in excess of 20 percent for not more than one six-minute period in any 60 consecutive minutes (Complies by using sweet natural gas as fuel). [LAC 33:III.1101.B]
Which Months: All Year Statistical Basis: None specified

2 Total suspended particulate <= 0.6 lb/MMBTU of heat input (Complies by using sweet natural gas as fuel). [LAC 33:III.1313.C]
Which Months: All Year Statistical Basis: None specified

3 Equipment/operational data recordkeeping by electronic or hard copy at the approved frequency. Record and keep on site for at least two years the data required to demonstrate exemption from the provisions of LAC 33:III.Chapter 15. Record all emissions data in the units of the standard using the averaging time of the standard. Make records available to a representative of DEQ or the U.S. EPA on request. [LAC 33:III.1513]

EQT005 15 - Glycol Reboiler Still Vent-Condenser

4 VOC, Total >= 70 % reduction using a control device. Demonstrate percent reduction using the methods found in LAC 33:III.2116.D. [LAC 33:III.2116.B.1.a]
Which Months: All Year Statistical Basis: None specified

5 Determine compliance with LAC 33:III.2116.B using the methods in LAC 33:III.2116.D.1-5, as appropriate. [LAC 33:III.2116.D]

6 Equipment/operational data recordkeeping by electronic or hard copy upon occurrence of event. Keep records of the information specified in LAC 33:III.2116.F.1 and 2. [LAC 33:III.2116.F]

7 Benzene monitored by calculations annually using the methods and procedures as described in 40 CFR 63.772(b)(2)(i) and using the most recent gas analysis of a gas sample collected upstream from the glycol dehydration system that was conducted by a laboratory accredited in accordance with LAC 33:I.Chapters 45-59 . [LAC 33:III.501.C.6]
Which Months: All Year Statistical Basis: Annual maximum

8 Benzene recordkeeping by electronic or hard copy monthly. Keep records of the annual maximum benzene emissions (in terms of tons per year) in accordance with 40 CFR 63.774(d)(1)(ii). Make records available for inspection by DEQ personnel. [LAC 33:III.501.C.6]

9 Submit report: Due annually, by the 31st of March. Report annual maximum benzene emissions (in terms of tons per year) for the preceding calendar year to the Office of Environmental Compliance, Enforcement Division. [LAC 33:III.501.C.6]

10 Compliance with the applicable provisions of 40 CFR 63 Subpart HH shall be achieved by January 5, 2009. [40 CFR 63.760(f)(5)(ii)]

11 Maintain records as specified in 40 CFR 63.774(d)(1). Subpart HH. [40 CFR 63.764(e)]

EQT018 COMP1 - Compressor Engine G3516 TALE

12 Opacity <= 20 percent; except emissions may have an average opacity in excess of 20 percent for not more than one six-minute period in any 60 consecutive minutes (Complies by using sweet natural gas as fuel). [LAC 33:III.1311.C]
Which Months: All Year Statistical Basis: Six-minute average

13 Equipment/operational data recordkeeping by electronic or hard copy at the approved frequency. Record and keep on site for at least two years the data required to demonstrate exemption from the provisions of LAC 33:III.Chapter 15. Record all emissions data in the units of the standard using the averaging time of the standard. Make records available to a representative of DEQ or the U.S. EPA on request. [LAC 33:III.1513]

14 Submit notification: Due at least 30 days prior to performance/emissions test to the Office of Environmental Assessment, Environmental Technology Division, Engineering Services, to provide the opportunity to conduct a pretest meeting and observe the emission testing. [LAC 33:III.501.C.6]

15 Submit report: Due within 60 days after performance/emissions test. Submit emissions test results to the Office of Environmental Assessment, Environmental Technology Division, Engineering Services. [LAC 33:III.501.C.6]

SPECIFIC REQUIREMENTS

AI ID: 18637 - Hog Bayou Field Facility
Activity Number: PER20060001
Permit Number: 0560-00069-04
Air - Minor Source/Small Source Mod

EQT018 COMP1 - Compressor Engine G3516 TALE

16 Conduct a performance/emissions test: Due within 180 days after initial startup (or restart-up after modification), or within 60 days after achieving normal production rate or end of the shakedown period, whichever is earliest. The stack test's purpose is to demonstrate compliance with the emission limits of this permit. Repeat the test after each major engine overhaul. Test methods and procedures shall be in accordance with New Source Performance Standards, 40 CFR 60, Appendix A, Method 7E - Determination of Nitrogen Oxides Emissions from Stationary Sources and Method 10 - Determination of Carbon Monoxide Emissions from Stationary Sources. Use alternate stack test methods only with the prior approval of the Office of Environmental Assessment, Environmental Technology Division, Engineering Services. As required by LAC 33:III.913, provide necessary sampling ports in stacks or ducts and such other safe and proper sampling and testing facilities for proper determination of the emission limits. [LAC 33:III.501.C.6]

17 Stack gas concentration: Nitrogen oxides monitored by portable analyzer semiannually (six months after the stack test or previous semiannual test, plus or minus 30 days). Maintain concentrations of NOx in the same range as during the initial stack test. Calibrate portable analyzers before each test using a known reference gas sample. [LAC 33:III.501.C.6]
Which Months: All Year Statistical Basis: None specified

18 Stack gas concentration: Carbon monoxide monitored by portable analyzer semiannually (six months after the stack test or previous semiannual test, plus or minus 30 days). Maintain concentrations of CO in the same range as during the initial stack test. Calibrate portable analyzers before each test using a known reference gas sample. [LAC 33:III.501.C.6]
Which Months: All Year Statistical Basis: None specified

19 Stack gas concentration: Oxygen monitored by portable analyzer semiannually (six months after the stack test or previous semiannual test, plus or minus 30 days). Maintain concentrations of O2 in the same range as during the initial stack test. Calibrate portable analyzers before each test using a known reference gas sample. [LAC 33:III.501.C.6]
Which Months: All Year Statistical Basis: None specified

20 Equipment/operational data recordkeeping by electronic or hard copy semiannually. Recorded parameters are NOx, CO and O2 concentrations in the stack gas obtained during semiannual testing. [LAC 33:III.501.C.6]

EQT019 COMP3 - Compressor Engine 3606

21 Opacity <= 20 percent; except emissions may have an average opacity in excess of 20 percent for not more than one six-minute period in any 60 consecutive minutes (Complies by using sweet natural gas as fuel). [LAC 33:III.1311.C]
Which Months: All Year Statistical Basis: Six-minute average

22 Equipment/operational data recordkeeping by electronic or hard copy at the approved frequency. Record and keep on site for at least two years the data required to demonstrate exemption from the provisions of LAC 33:III.Chapter 15. Record all emissions data in the units of the standard using the averaging time of the standard. Make records available to a representative of DEQ or the U.S. EPA on request. [LAC 33:III.1513]

23 Submit notification: Due at least 30 days prior to performance/emissions test to the Office of Environmental Assessment, Environmental Technology Division, Engineering Services, to provide the opportunity to conduct a pretest meeting and observe the emission testing. [LAC 33:III.501.C.6]

24 Submit report: Due within 60 days after performance/emissions test. Submit emissions test results to the Office of Environmental Assessment, Environmental Technology Division, Engineering Services. [LAC 33:III.501.C.6]

25 Conduct a performance/emissions test: Due within 180 days after initial startup (or restart-up after modification), or within 60 days after achieving normal production rate or end of the shakedown period, whichever is earliest. The stack test's purpose is to demonstrate compliance with the emission limits of this permit. Repeat the test after each major engine overhaul. Test methods and procedures shall be in accordance with New Source Performance Standards, 40 CFR 60, Appendix A, Method 7E - Determination of Nitrogen Oxides Emissions from Stationary Sources and Method 10 - Determination of Carbon Monoxide Emissions from Stationary Sources. Use alternate stack test methods only with the prior approval of the Office of Environmental Assessment, Environmental Technology Division, Engineering Services. As required by LAC 33:III.913, provide necessary sampling ports in stacks or ducts and such other safe and proper sampling and testing facilities for proper determination of the emission limits. [LAC 33:III.501.C.6]

SPECIFIC REQUIREMENTS

AI ID: 18637 - Hog Bayou Field Facility
Activity Number: PER20060001
Permit Number: 0560-00069-04
Air - Minor Source/Small Source Mod

EQT019 COMP3 - Compressor Engine 3606

26 Stack gas concentration: Nitrogen oxides monitored by portable analyzer annually (twelve months after the stack test or previous annual test, plus or minus 30 days). Maintain concentrations of NOx in the same range as during the initial stack test. Calibrate portable analyzers before each test using a known reference gas sample. [LAC 33:III.501.C.6]
Which Months: All Year Statistical Basis: None specified

27 Stack gas concentration: Carbon monoxide monitored by portable analyzer annually (twelve months after the stack test or previous annual test, plus or minus 30 days). Maintain concentrations of CO in the same range as during the initial stack test. Calibrate portable analyzers before each test using a known reference gas sample. [LAC 33:III.501.C.6]
Which Months: All Year Statistical Basis: None specified

28 Stack gas concentration: Oxygen monitored by portable analyzer annually (twelve months after the stack test or previous annual test, plus or minus 30 days). Maintain concentrations of O2 in the same range as during the initial stack test. Calibrate portable analyzers before each test using a known reference gas sample. [LAC 33:III.501.C.6]
Which Months: All Year Statistical Basis: None specified

29 Equipment/operational data recordkeeping by electronic or hard copy annually. Recorded parameters are NOx, CO and O2 concentrations in the stack gas obtained during annual testing. [LAC 33:III.501.C.6]

EQT020 AMINEX - Amine Reboiler Burner Exhaust

30 Opacity <= 20 percent, except during the cleaning of a fire box or building of a new fire, soot blowing or lancing, charging of an incinerator, equipment changes, ash removal or rapping of precipitators, which may have an opacity in excess of 20 percent for not more than one six-minute period in any 60 consecutive minutes (Complies by using sweet natural gas as fuel). [LAC 33:III.1101.B]
Which Months: All Year Statistical Basis: None specified

31 Total suspended particulate <= 0.6 lb/MMBTU of heat input (Complies by using sweet natural gas as fuel). [LAC 33:III.1313.C]
Which Months: All Year Statistical Basis: None specified

32 Equipment/operational data recordkeeping by electronic or hard copy at the approved frequency. Record and keep on site for at least two years the data required to demonstrate exemption from the provisions of LAC 33:III.Chapter 15. Record all emissions data in the units of the standard using the averaging time of the standard. Make records available to a representative of DEQ or the U.S. EPA on request. [LAC 33:III.1513]

EQT021 AMINVNT - Amine Reboiler Still Column Vent and Flash Tank

33 40 CFR 60 Subpart LLL: EXEMPT - Design capacity < 2 LT/D of hydrogen sulfide in the acid gas (expressed as sulfur). Subpart LLL. [40 CFR 60.640(b)]

34 Equipment/operational data recordkeeping by electronic or hard copy at the approved frequency. Keep records of an analysis demonstrating that the design capacity is less than 2 LT/D of H2S expressed as sulfur for the life of the facility. Subpart LLL. [40 CFR 60.647(c)]

FUG001 11 - Fugitives

35 Equip all rotary pumps and compressors handling volatile organic compounds having a true vapor pressure of 1.5 psia or greater at handling conditions with mechanical seals or other equivalent equipment. [LAC 33:III.2111]

GRP001 Standby Tanks and Emergency Sources

36 Any source listed as "standby" (i.e., EQTs 004, 017, and 018) shall not be authorized to operate until a permit modification can be issued. An updated Emission Point List, Emissions Inventory Questionnaire (EIQ), emission calculations, and certification statement as described in LAC 33:III.517.B.1 shall be submitted to the Office of Environmental Services, Air Permits Division prior to permit modification. [LAC 33:III.501.C.6]

LDEQ-EDMS Document 35695808, Page 22 of 185

SPECIFIC REQUIREMENTS

AI ID: 18637 - Hog Bayou Field Facility
Activity Number: PER20060001
Permit Number: 0560-00069-04
Air - Minor Source/Small Source Mod

GRP001 Standby Tanks and Emergency Sources

37 The Flash Gas Emergency Vent, EQT008, and Emergency Sump Tank, EQT011, shall only operate during an emergency event. The permittee shall make every effort to ensure that emissions from these sources do not exceed the facility-wide emissions totals listed in the "Emission Rates for Criteria Pollutants" and "Emission Rates for TAP/HAP & Other Pollutants" sections of this permit. The permittee shall record the hours of operation and the resulting emissions during each emergency event, and report this information to the Office of Environmental Compliance, Enforcement Division. If the emergency event is estimated to last more than 24 hours or result in exceeding the facility-wide emissions totals, the permittee shall notify the Office of Environmental Compliance, Enforcement Division within 24 hours after commencment of the emergency event and shall request the appropriate authorization to continue the use of any of these two sources from the Office of Environmental Services, Air Permits Division. [LAC 33:III.501.C.6]

GRP002 Entire Facility

38 Emissions of smoke which pass onto or across a public road and create a traffic hazard by impairment of visibility as defined in LAC 33:III.111 or intensify an existing traffic hazard condition are prohibited. [LAC 33:III.1103]

39 Outdoor burning of waste material or other combustible material is prohibited. [LAC 33:III.1109.B]

40 Emissions of particulate matter which pass onto or across a public road and create a traffic hazard by impairment of visibility or intensify an existing traffic hazard condition are prohibited. [LAC 33:III.1303.B]

41 Maintain best practical housekeeping and maintenance practices at the highest possible standards to reduce the quantity of organic compounds emissions. Good housekeeping shall include, but not be limited to, the practices listed in LAC 33:III.2113.A.1-5. [LAC 33:III.2113.A]

42 Failure to pay the prescribed application fee or annual fee as provided herein, within 90 days after the due date, will constitute a violation of these regulations and shall subject the person to applicable enforcement actions under the Louisiana Environmental Quality Act including, but not limited to, revocation or suspension of the applicable permit, license, registration, or variance. [LAC 33:III.219]

43 Carbon monoxide <= 68.35 tons/yr. [LAC 33:III.501.C.6]
Which Months: All Year Statistical Basis: Annual maximum

44 Nitrogen oxides <= 32.55 tons/yr. [LAC 33:III.501.C.6]
Which Months: All Year Statistical Basis: Annual maximum

45 Particulate matter (10 microns or less) <= 0.10 tons/yr. [LAC 33:III.501.C.6]
Which Months: All Year Statistical Basis: Annual maximum

46 Sulfur dioxide <= 0.06 tons/yr. [LAC 33:III.501.C.6]
Which Months: All Year Statistical Basis: Annual maximum

47 VOC, Total <= 97.87 tons/yr. [LAC 33:III.501.C.6]
Which Months: All Year Statistical Basis: Annual maximum

48 Benzene <= 3.728 tons/yr. [LAC 33:III.501.C.6]
Which Months: All Year Statistical Basis: Annual maximum

49 Ethyl benzene <= 0.192 tons/yr. [LAC 33:III.501.C.6]
Which Months: All Year Statistical Basis: Annual maximum

50 Formaldehyde <= 5.058 tons/yr. [LAC 33:III.501.C.6]
Which Months: All Year Statistical Basis: Annual maximum

51 Toluene <= 0.381 tons/yr. [LAC 33:III.501.C.6]
Which Months: All Year Statistical Basis: Annual maximum

52 Xylene (mixed isomers) <= 0.509 tons/yr. [LAC 33:III.501.C.6]
Which Months: All Year Statistical Basis: Annual maximum

LDEQ-EDMS Document 35695808, Page 23 of 185

SPECIFIC REQUIREMENTS

AI ID: 18637 - Hog Bayou Field Facility
Activity Number: PER20060001
Permit Number: 0560-00069-04
Air - Minor Source/Small Source Mod

GRP002 Entire Facility

53 n-Hexane <= 0.015 tons/yr. [LAC 33:III.501.C.6]
Which Months: All Year Statistical Basis: Annual maximum

54 Submit standby plan for the reduction or elimination of emissions during an Air Pollution Alert, Air Pollution Warning, or Air Pollution Emergency: Due within 30 days after requested by the administrative authority. [LAC 33:III.5611.A]

55 During an Air Pollution Alert, Air Pollution Warning or Air Pollution Emergency, make the standby plan available on the premises to any person authorized by the department to enforce these regulations. [LAC 33:III.5611.B]

56 All affected facilities shall comply with all applicable provisions in 40 CFR 60 Subpart A. [40 CFR 60]

57 All affected facilities shall comply with all applicable provisions in 40 CFR 63 Subpart A as delineated in Table 2 of 40 CFR 63 Subpart HH. [40 CFR 63]

GRP003 Oil Production Limitation

58 Throughput <= 292000 bbl/yr. Noncompliance with this limitation is a reportable violation of the permit. Notify the Office of Environmental Compliance, Enforcement Division if total oil throughput exceeds the maximum listed in this specific condition for any twelve consecutive month period. [LAC 33:III.501.C.6]
Which Months: All Year Statistical Basis: Annual maximum

59 Throughput monitored by technically sound method continuously. [LAC 33:III.501.C.6]
Which Months: All Year Statistical Basis: None specified

60 Throughput recordkeeping by electronic or hard copy monthly. Keep records of the total oil throughput each month, as well as the total oil throughput for the last twelve months. Make records available for inspection by DEQ personnel. [LAC 33:III.501.C.6]

61 Submit report: Due annually, by the 31st of March. Report the total oil throughput for the preceding calendar year to the Office of Environmental Compliance, Enforcement Division. [LAC 33:III.501.C.6]

Department of Environmental Quality
Air Quality Division
P.O. Box 82135
Baton Rouge, LA 70884-2135
(225) 765-0219

LOUISIANA

SINGLE POINT / AREA / VOLUME SOURCE
Emission Inventory Questionnaire (EIQ)
for Air Pollutants

Company Name	Plant location and name	Date of Submittal
Hilcorp Energy Company	Hogg Bayou Facility	1/5/2005

Source ID number	Descriptive name of the equipment serviced by this stack or vent	Approximate location of stack or vent			
06	Glycol Reboiler Burner	UTM zone no.	15	Horizontal coordinate	500.725 mE
				Vertical coordinagte	3287.581 mN

Stack and Discharge Physical Characteristics Change yes/no	Height of Stack (feet)	Diameter of Stack (feet)	Stack gas exit temperature (F)	Stack gas flow at process conditions	Stack gas exit velocity	Date of Cons./Mod.	Operating Rate (max) or tank capacity
	56	0.8	515	98768.45 cu ft/min	3023.37 ft/sec.	Jan-05	1.2 mmbtu/hr

Fuel

Type of fuel used and heat input	Type of fuel	Heat Input (MM BTU/hr)
a	nat gas	1.2
b		
c		

Operating Characteristics

Percent of annual throughput of pollutants through this emission point	Dec-Feb	Mar-May	Jun-Aug	Sep-Nov
	25	25	25	25

Normal operating time of this point	hrs/day	days/wk	wk/yr
	24	7	52

Normal Operating Rate: 1.2 mmbtu/hr

Air Pollutant Specific Information

Pollutant	Control Equipment Code	Control Equipment Efficiency	Emission Rate Average (lbs/hr)	Emission Rate Maximum (lbs/hr)	Emission Rate Annual (tons/yr)	Emission Estimation Method	Add, Change or Delete	Concentration in gases exiting at stack
Oxides of Nitrogen	0	0	0.118	0.118	0.515	3	Change	ppm/vol
Carbon Monoxide	0	0	0.099	0.099	0.433	3	Change	ppm/vol
VOC's	0	0	0.006	0.006	0.028	3	Change	ppm/vol
Sulfur Dioxide	0	0	0.001	0.001	0.003	3	Change	ppm/vol
Particulate Matter	0	0	0.009	0.009	0.039	3	Change	ppm/vol
Methane	0	0	0.003	0.003	0.012	3	Change	ppm/vol
								ppm/vol
								ppm/vol
								ppm/vol
								ppm/vol
								ppm/vol
								ppm/vol
								ppm/vol
								ppm/vol
								ppm/vol
								ppm/vol

Department of Environmental Quality
Air Quality Division
P.O. Box 82135
Baton Rouge, LA 70884-2135
(225) 765-0219

LOUISIANA

SINGLE POINT / AREA / VOLUME SOURCE

Emission Inventory Questionnaire (EIQ)

for Air Pollutants

Company Name	Plant location and name	Date of Submittal
Hilcorp Energy Company	Hogg Bayou	1/5/2005

Source ID number	Descriptive name of the equipment serviced by this stack or vent	Approximate location of stack or vent			
		UTM zone no.	15	Horizontal coordinate	500.725 mE
08	Oil Storage Tank			Vertical coordinagte	3287.581 mN

Stack and Discharge Physical Characteristics Change yes/no	Height of Stack (feet)	Diameter of Stack (feet)	Stack gas exit temperature (F)	Stack gas flow at process conditions	Stack gas exit velocity	Date of Cons./Mod.	Operating Rate (max) or tank capacity
	36	0.3	78	na cu ft/min	na ft/sec.	Jan-05	12600 gallons

Fuel	Type of fuel used and heat input			Operating Characteristics	Percent of annual throughput of pollutants through this emission point				Normal operating time of this point			Normal Operating Rate
		Type of fuel	Heat Input (MM BTU/hr)		Dec-Feb	Mar-May	Jun-Aug	Sep-Nov	hrs/day	days/wk	wk/yr	
	a	na	na		25	25	25	25	24	7	52	146000 bbl/year
	b											
	c											

Air Pollutant Specific Information

Pollutant	Control Equipment Code	Control Equipment Efficiency	Emission Rate Average (lbs/hr)	Emission Rate Maximum (lbs/hr)	Emission Rate Annual (tons/yr)	Emission Estimation Method	Add, Change or Delete	Concentration in gases exiting at stack
Methane	0	0	0.000	0.000	0.000	3 & 5	Change	ppm/vol
Ethane	0	0	0.815	0.815	3.568	3 & 5	Change	ppm/vol
Total VOC's (incl. those below)	0	0	8.583	8.583	37.596	3 & 5	Change	ppm/vol
Propane	0	0	2.268	2.268	9.936	3 & 5	Change	ppm/vol
n-Butane	0	0	1.758	1.758	7.702	3 & 5	Change	ppm/vol
2 Methylpentane	0	0	0.158	0.158	0.692	3 & 5	Change	ppm/vol
n-Pentane	0	0	0.641	0.641	2.807	3 & 5	Change	ppm/vol
3 Methylpentane	0	0	0.090	0.090	0.396	3 & 5	Change	ppm/vol
Hexane	0	0	0.193	0.193	0.846	3 & 5	Change	ppm/vol
Benzene	0	0	0.011	0.011	0.046	3 & 5	Change	ppm/vol
Toluene	0	0	0.020	0.020	0.088	3 & 5	Change	ppm/vol
Ethylbenzene	0	0	0.008	0.008	0.035	3 & 5	Change	ppm/vol
Xylene	0	0	0.050	0.050	0.219	3 & 5	Change	ppm/vol
Cyclohexane	0	0	0.008	0.008	0.035	3 & 5	Change	ppm/vol
Heptane	0	0	0.098	0.098	0.431	3 & 5	Change	ppm/vol

Department of Environmental Quality
Air Quality Division
P.O. Box 82135
Baton Rouge, LA 70884-2135
(225) 765-0219

LOUISIANA

SINGLE POINT / AREA / VOLUME SOURCE

Emission Inventory Questionnaire (EIQ)

for Air Pollutants

Company Name	Plant location and name	Date of Submittal
Hilcorp Energy Company	Hogg Bayou	1/5/2005

Source ID number	Descriptive name of the equipment serviced by this stack or vent	Approximate location of stack or vent			
09	Oil Storage Tank	UTM zone no.	15	Horizontal coordinate	500.725 mE
				Vertical coordinagte	3287.581 mN

Stack and Discharge Physical Characteristics	Height of Stack (feet)	Diameter of Stack (feet)	Stack gas exit temperature (F)	Stack gas flow at process conditions	Stack gas exit velocity	Date of Cons./Mod.	Operating Rate (max) or tank capacity
Change yes/no	36	0.3	78	na cu ft/min	na ft/sec.	Jan-05	12600 gallons

Fuel	Type of fuel used and heat input			Operating Characteristics	Percent of annual throughput of pollutants through this emission point				Normal operating time of this point			Normal Operating Rate
		Type of fuel	Heat Input (MM BTU/hr)		Dec-Feb	Mar-May	Jun-Aug	Sep-Nov	hrs/day	days/wk	wk/yr	146000 bbl/year
	a	na	na		25	25	25	25	24	7	52	
	b											
	c											

Air Pollutant Specific Information

Pollutant	Control Equipment Code	Control Equipment Efficiency	Emission Rate Average (lbs/hr)	Emission Rate Maximum (lbs/hr)	Emission Rate Annual (tons/yr)	Emission Estimation Method	Add, Change or Delete	Concentration in gases exiting at stack
Methane	0	0	0.000	0.000	0.000	3 & 5	Change	ppm/vol
Ethane	0	0	0.815	0.815	3.568	3 & 5	Change	ppm/vol
Total VOC's (incl. those below)	0	0	8.583	8.583	37.596	3 & 5	Change	ppm/vol
Propane	0	0	2.268	2.268	9.936	3 & 5	Change	ppm/vol
n-Butane	0	0	1.758	1.758	7.702	3 & 5	Change	ppm/vol
2 Methylpentane	0	0	0.158	0.158	0.692	3 & 5	Change	ppm/vol
n-Pentane	0	0	0.641	0.641	2.807	3 & 5	Change	ppm/vol
3 Methylpentane	0	0	0.090	0.090	0.396	3 & 5	Change	ppm/vol
Hexane	0	0	0.193	0.193	0.846	3 & 5	Change	ppm/vol
Benzene	0	0	0.011	0.011	0.046	3 & 5	Change	ppm/vol
Toluene	0	0	0.020	0.020	0.088	3 & 5	Change	ppm/vol
Ethylbenzene	0	0	0.008	0.008	0.035	3 & 5	Change	ppm/vol
Xylene	0	0	0.050	0.050	0.219	3 & 5	Change	ppm/vol
Cyclohexane	0	0	0.008	0.008	0.035	3 & 5	Change	ppm/vol
Heptane	0	0	0.098	0.098	0.431	3 & 5	Change	ppm/vol

Department of Environmental Quality
Air Quality Division
P.O. Box 82135
Baton Rouge, LA 70884-2135
(225) 765-0219

LOUISIANA

SINGLE POINT / AREA / VOLUME SOURCE

Emission Inventory Questionnaire (EIQ)

for Air Pollutants

Company Name	Plant location and name	Date of Submittal
Hilcorp Energy Company	Hogg Bayou	1/5/2005

Source ID number	Descriptive name of the equipment serviced by this stack or vent	Approximate location of stack or vent			
		UTM zone no.	15	Horizontal coordinate	500.725 mE
10	Saltwater Tank (standby)			Vertical coordinagte	3287.581 mN

Stack and Discharge Physical Characteristics Change yes/no	Height of Stack (feet)	Diameter of Stack (feet)	Stack gas exit temperature (F)	Stack gas flow at process conditions	Stack gas exit velocity	Date of Cons./Mod.	Operating Rate (max) or tank capacity
	36	0.3	78	na cu ft/min	na ft/sec.	Jan-05	504000 gallons

Fuel	Type of fuel used and heat input		Operating Characteristics	Percent of annual throughput of pollutants through this emission point				Normal operating time of this point			Normal Operating Rate
	Type of fuel	Heat Input (MM BTU/hr)		Dec-Feb	Mar-May	Jun-Aug	Sep-Nov	hrs/day	days/wk	wk/yr	0 bbl/year
a	na	na		25	25	25	25	24	7	52	
b											
c											

Air Pollutant Specific Information

Pollutant	Control Equipment Code	Control Equipment Efficiency	Emission Rate Average (lbs/hr)	Emission Rate Maximum (lbs/hr)	Emission Rate Annual (tons/yr)	Emission Estimation Method	Add, Change or Delete	*Concentration in gases exiting at stack*
Methane	0	0	0.000	0.000	0.000	3 & 5	Change	ppm/vol
Ethane	0	0	0.000	0.000	0.000	3 & 5	Change	ppm/vol
Total VOC's (incl. those below)	0	0	0.000	0.000	0.000	3 & 5	Change	ppm/vol
Propane	0	0	0.000	0.000	0.000	3 & 5	Change	ppm/vol
n-Butane	0	0	0.000	0.000	0.000	3 & 5	Change	ppm/vol
2 Methylpentane	0	0	0.000	0.000	0.000	3 & 5	Change	ppm/vol
n-Pentane	0	0	0.000	0.000	0.000	3 & 5	Change	ppm/vol
3 Methylpentane	0	0	0.000	0.000	0.000	3 & 5	Change	ppm/vol
Hexane	0	0	0.000	0.000	0.000	3 & 5	Change	ppm/vol
Benzene	0	0	0.000	0.000	0.000	3 & 5	Change	ppm/vol
Toluene	0	0	0.000	0.000	0.000	3 & 5	Change	ppm/vol
Ethylbenzene	0	0	0.000	0.000	0.000	3 & 5	Change	ppm/vol
Xylene	0	0	0.000	0.000	0.000	3 & 5	Change	ppm/vol
Cyclohexane	0	0	0.000	0.000	0.000	3 & 5	Change	ppm/vol
Heptane	0	0	0.000	0.000	0.000	3 & 5	Change	ppm/vol

Department of Environmental Quality
Air Quality Division
P.O. Box 82135
Baton Rouge, LA 70884-2135
(225) 765-0219

LOUISIANA

SINGLE POINT / AREA / VOLUME SOURCE

Emission Inventory Questionnaire (EIQ)

for Air Pollutants

Company Name	Plant location and name	Date of Submittal
Hilcorp Energy Company	Hogg Bayou	1/5/2005

Source ID number	Descriptive name of the equipment serviced by this stack or vent	Approximate location of stack or vent			
20	Saltwater Storage Tank	UTM zone no.	15	Horizontal coordinate	500.725 mE
				Vertical coordinagte	3287.581 mN

Stack and Discharge Physical Characteristics Change yes/no	Height of Stack (feet)	Diameter of Stack (feet)	Stack gas exit temperature (F)	Stack gas flow at process conditions	Stack gas exit velocity	Date of Cons./Mod.	Operating Rate (max) or tank capacity
	36	0.3	78	na cu ft/min	na ft/sec.	Jan-05	63000 gallons

Fuel	Type of fuel used and heat input		Operating Characteristics	Percent of annual throughput of pollutants through this emission point				Normal operating time of this point			Normal Operating Rate
		Type of fuel	Heat Input (MM BTU/hr)	Dec-Feb	Mar-May	Jun-Aug	Sep-Nov	hrs/day	days/wk	wk/yr	
	a	na	na	25	25	25	25	24	7	52	1460 bbl/year
	b										
	c										

Air Pollutant Specific Information

Pollutant	Control Equipment Code	Control Equipment Efficiency	Emission Rate Average (lbs/hr)	Emission Rate Maximum (lbs/hr)	Emission Rate Annual (tons/yr)	Emission Estimation Method	Add, Change or Delete	Concentration in gases exiting at stack
Methane	0	0	0.000	0.000	0.000	3 & 5	Change	ppm/vol
Ethane	0	0	0.008	0.008	0.036	3 & 5	Change	ppm/vol
Total VOC's (incl. those below)	0	0	0.086	0.086	0.376	3 & 5	Change	ppm/vol
Propane	0	0	0.023	0.023	0.099	3 & 5	Change	ppm/vol
n-Butane	0	0	0.018	0.018	0.077	3 & 5	Change	ppm/vol
2 Methylpentane	0	0	0.002	0.002	0.007	3 & 5	Change	ppm/vol
n-Pentane	0	0	0.006	0.006	0.028	3 & 5	Change	ppm/vol
3 Methylpentane	0	0	0.001	0.001	0.004	3 & 5	Change	ppm/vol
Hexane	0	0	0.002	0.002	0.008	3 & 5	Change	ppm/vol
Benzene	0	0	0.000	0.000	0.000	3 & 5	Change	ppm/vol
Toluene	0	0	0.000	0.000	0.001	3 & 5	Change	ppm/vol
Ethylbenzene	0	0	0.000	0.000	0.000	3 & 5	Change	ppm/vol
Xylene	0	0	0.001	0.001	0.002	3 & 5	Change	ppm/vol
Cyclohexane	0	0	0.000	0.000	0.000	3 & 5	Change	ppm/vol
Heptane	0	0	0.001	0.001	0.004	3 & 5	Change	ppm/vol

Department of Environmental Quality
Air Quality Division
P.O. Box 82135
Baton Rouge, LA 70884-2135
(225) 765-0219

LOUISIANA

SINGLE POINT / AREA / VOLUME SOURCE

Emission Inventory Questionnaire (EIQ)

for Air Pollutants

Company Name	Plant location and name	Date of Submittal
Hilcorp Energy Company	Hogg Bayou	1/5/2005

Source ID number	Descriptive name of the equipment serviced by this stack or vent	Approximate location of stack or vent			
		UTM zone no.	15	Horizontal coordinate	500.725 mE
21	Saltwater Storage Tank			Vertical coordinagte	3287.581 mN

Stack and Discharge Physical Characteristics	Height of Stack (feet)	Diameter of Stack (feet)	Stack gas exit temperature (F)	Stack gas flow at process conditions	Stack gas exit velocity	Date of Cons./Mod.	Operating Rate (max) or tank capacity
Change yes/no	36	0.3	78	na cu ft/min	na ft/sec.	Jan-05	63000 gallons

Fuel	Type of fuel used and heat input		Operating Characteristics	Percent of annual throughput of pollutants through this emission point				Normal operating time of this point			Normal Operating Rate
		Type of fuel	Heat Input (MM BTU/hr)	Dec-Feb	Mar-May	Jun-Aug	Sep-Nov	hrs/day	days/wk	wk/yr	1460 bbl/year
	a	na	na	25	25	25	25	24	7	52	
	b										
	c										

Air Pollutant Specific Information

Pollutant	Control Equipment Code	Control Equipment Efficiency	Emission Rate Average (lbs/hr)	Emission Rate Maximum (lbs/hr)	Emission Rate Annual (tons/yr)	Emission Estimation Method	Add, Change or Delete	Concentration in gases exiting at stack
Methane	0	0	0.000	0.000	0.000	3 & 5	Change	ppm/vol
Ethane	0	0	0.008	0.008	0.036	3 & 5	Change	ppm/vol
Total VOC's (incl. those below)	0	0	0.086	0.086	0.376	3 & 5	Change	ppm/vol
Propane	0	0	0.023	0.023	0.099	3 & 5	Change	ppm/vol
n-Butane	0	0	0.018	0.018	0.077	3 & 5	Change	ppm/vol
2 Methylpentane	0	0	0.002	0.002	0.007	3 & 5	Change	ppm/vol
n-Pentane	0	0	0.006	0.006	0.028	3 & 5	Change	ppm/vol
3 Methylpentane	0	0	0.001	0.001	0.004	3 & 5	Change	ppm/vol
Hexane	0	0	0.002	0.002	0.008	3 & 5	Change	ppm/vol
Benzene	0	0	0.000	0.000	0.000	3 & 5	Change	ppm/vol
Toluene	0	0	0.000	0.000	0.001	3 & 5	Change	ppm/vol
Ethylbenzene	0	0	0.000	0.000	0.000	3 & 5	Change	ppm/vol
Xylene	0	0	0.001	0.001	0.002	3 & 5	Change	ppm/vol
Cyclohexane	0	0	0.000	0.000	0.000	3 & 5	Change	ppm/vol
Heptane	0	0	0.001	0.001	0.004	3 & 5	Change	ppm/vol

Louisiana

EIQ Data Sheet

Company Name	Plant location and name	Date of Submittal
Hilcorp Energy Company	Hogg Bayou Facility	1/5/2005

Source ID number	Descriptive name of the equipment serviced by this stack or vent	Approximate location of stack or vent			
		UTM zone no.	15	Horizontal coordinate	500.725 mE
11	Fugitives			Vertical coordinagte	3287.581 mN

Stack and Discharge Physical Characteristics	Height of Stack (feet)	Diameter of Stack (feet)	Stack gas exit temperature (F)	Stack gas flow at process conditions	Stack gas exit velocity	Date of Cons./Mod.	Operating Rate (max) or tank capacity
Change yes/no	na	na	na	na cu ft/min	na ft/sec.	Jan-05	0 cuft/min

Fuel	Type of fuel used and heat input			Operating Characteristics	Percent of annual throughput of pollutants through this emission point				Normal operating time of this point			Normal Operating Rate
		Type of fuel	Heat Input (MM BTU/hr)		Dec-Feb	Mar-May	Jun-Aug	Sep-Nov	hrs/day	days/wk	wk/yr	0 cuft/min
	a	na	na		25	25	25	25	24	7	52	
	b											
	c											

Air Pollutant Specific Information

Pollutant	Control Equipment Code	Control Equipment Efficiency	Emission Rate Average (lbs/hr)	Emission Rate Maximum (lbs/hr)	Emission Rate Annual (tons/yr)	Emission Estimation Method	Add, Change or Delete	Concentration in gases exiting at stack
Methane	0	0	8.614	8.614	37.731	5	Change	ppm/vol
NMHC	0	0	0.749	0.749	3.281	5	Change	ppm/vol
Total VOC's (incl. those below)	0	0	0.328	0.328	1.435	5	Change	ppm/vol
C6+	0	0	0.032	0.032	0.139	5	Change	ppm/vol
Benzene	0	0	0.002	0.002	0.009	5	Change	ppm/vol
Toluene	0	0	0.004	0.004	0.016	5	Change	ppm/vol
Ethylbenzene	0	0	0.000	0.000	0.001	5	Change	ppm/vol
Xylene	0	0	0.001	0.001	0.004	5	Change	ppm/vol
								ppm/vol
								ppm/vol
								ppm/vol
								ppm/vol
								ppm/vol
								ppm/vol
								ppm/vol

Department of Environmental Quality
Air Quality Division
P.O. Box 82135
Baton Rouge, LA 70884-2135
(225) 765-0219

LOUISIANA

SINGLE POINT / AREA / VOLUME SOURCE

Emission Inventory Questionnaire (EIQ)

for Air Pollutants

Company Name	Plant location and name	Date of Submittal
Hilcorp Energy Company	Hogg Bayou	1/5/2005

Source ID number	Descriptive name of the equipment serviced by this stack or vent	Approximate location of stack or vent			
		UTM zone no.	15	Horizontal coordinate	500.725 mE
15	Glycol Reboiler Still Vent			Vertical coordinagte	3287.581 mN

Stack and Discharge Physical Characteristics	Height of Stack (feet)	Diameter of Stack (feet)	Stack gas exit temperature (F)	Stack gas flow at process conditions	Stack gas exit velocity	Date of Cons./Mod.	Operating Rate (max) or tank capacity
Change yes/no	na	na	na	na cu ft/min	na ft/sec.	Jan-05	14.00 mmscfd

Fuel	Type of fuel used and heat input			Operating Characteristics	Percent of annual throughput of pollutants through this emission point				Normal operating time of this point			Normal Operating Rate
		Type of fuel	Heat Input (MM BTU/hr)		Dec-Feb	Mar-May	Jun-Aug	Sep-Nov	hrs/day	days/wk	wk/yr	14.00 mmscfd
	a	na	na		25	25	25	25	24	7	52	
	b											
	c											

Air Pollutant Specific Information

Pollutant	Control Equipment Code	Control Equipment Efficiency	Emission Rate Average (lbs/hr)	Emission Rate Maximum (lbs/hr)	Emission Rate Annual (tons/yr)	Emission Estimation Method	Add, Change or Delete	Concentration in gases exiting at stack
Methane	99	98	0.001	0.001	0.005	5	Change	ppm/vol
Ethane	99	98	0.001	0.001	0.002	5	Change	ppm/vol
Total VOC's (incl. those below)	99	98	0.027	0.027	0.118	5	Change	ppm/vol
Propane	99	98	0.001	0.001	0.003	5	Change	ppm/vol
I-Butane	99	98	0.001	0.001	0.004	5	Change	ppm/vol
n-Butane	99	98	0.001	0.001	0.004	5	Change	ppm/vol
I-Pentane	99	98	0.001	0.001	0.003	5	Change	ppm/vol
n-Pentane	99	98	0.001	0.001	0.003	5	Change	ppm/vol
n-Hexane	99	98	0.000	0.000	0.000	5	Change	ppm/vol
Other Hexanes	99	98	0.000	0.000	0.000	5	Change	ppm/vol
Heptanes	99	98	0.000	0.000	0.000	5	Change	ppm/vol
Benzene	99	98	0.000	0.000	0.000	5	Change	ppm/vol
Toluene	99	98	0.000	0.000	0.000	5	Change	ppm/vol
Ethylbenzene	99	98	0.000	0.000	0.000	5	Change	ppm/vol
Xylene	99	98	0.000	0.000	0.000	5	Change	ppm/vol

Department of Environmental Quality Air Quality Division P.O. Box 82135 Baton Rouge, LA 70884-2135 (225) 765-0219	**LOUISIANA** **SINGLE POINT / AREA / VOLUME SOURCE** **Emission Inventory Questionnaire (EIQ)** **for Air Pollutants**	

Company Name	Plant location and name	Date of Submittal
Hilcorp Energy Company	Hogg Bayou	1/5/2005

Source ID number	Descriptive name of the equipment serviced by this stack or vent	Approximate location of stack or vent			
		UTM zone no.	15	Horizontal coordinate	500.725 mE
16	Emergency Vent			Vertical coordinagte	3287.581 mN

Stack and Discharge Physical Characteristics Change yes/no	Height of Stack (feet)	Diameter of Stack (feet)	Stack gas exit temperature (F)	Stack gas flow at process conditions	Stack gas exit velocity	Date of Cons./Mod.	Operating Rate (max) or tank capacity
	na	na	na	na cu ft/min	na ft/sec.	Jan-05	0.00 mmscfd

Fuel	Type of fuel used and heat input		Operating Characteristics	Percent of annual throughput of pollutants through this emission point				Normal operating time of this point			Normal Operating Rate
		Type of fuel	Heat Input (MM BTU/hr)	Dec-Feb	Mar-May	Jun-Aug	Sep-Nov	hrs/day	days/wk	wk/yr	0.00 mmscfd
	a	na	na	25	25	25	25	24	7	52	
	b										
	c										

Air Pollutant Specific Information

Pollutant	Control Equipment Code	Control Equipment Efficiency	Emission Rate Average (lbs/hr)	Emission Rate Maximum (lbs/hr)	Emission Rate Annual (tons/yr)	Emission Estimation Method	Add, Change or Delete	Concentration in gases exiting at stack
Methane			0.000	0.000	0.000	5	Change	ppm/vol
Ethane			0.000	0.000	0.000	5	Change	ppm/vol
Total VOC's (incl. those below)			0.000	0.000	0.000	5	Change	ppm/vol
Propane			0.000	0.000	0.000	5	Change	ppm/vol
I-Butane			0.000	0.000	0.000	5	Change	ppm/vol
n-Butane			0.000	0.000	0.000	5	Change	ppm/vol
I-Pentane			0.000	0.000	0.000	5	Change	ppm/vol
n-Pentane			0.000	0.000	0.000	5	Change	ppm/vol
n-Hexane			0.000	0.000	0.000	5	Change	ppm/vol
Other Hexanes			0.000	0.000	0.000	5	Change	ppm/vol
Heptanes			0.000	0.000	0.000	5	Change	ppm/vol
Benzene			0.000	0.000	0.000	5	Change	ppm/vol
Toluene			0.000	0.000	0.000	5	Change	ppm/vol
Ethylbenzene			0.000	0.000	0.000	5	Change	ppm/vol
Xylene			0.000	0.000	0.000	5	Change	ppm/vol

Department of Environmental Quality
Air Quality Division
P.O. Box 82135
Baton Rouge, LA 70884-2135
(225) 765-0219

LOUISIANA

SINGLE POINT / AREA / VOLUME SOURCE

Emission Inventory Questionnaire (EIQ)

for Air Pollutants

Company Name	Plant location and name	Date of Submittal
Hilcorp Energy Company	Hogg Bayou	1/5/2005

Source ID number	Descriptive name of the equipment serviced by this stack or vent	Approximate location of stack or vent			
17	Methanol Tank (standby)	UTM zone no.	15	Horizontal coordinate	500.725 mE
				Vertical coordinagte	3287.581 mN

Stack and Discharge Physical Characteristics	Height of Stack (feet)	Diameter of Stack (feet)	Stack gas exit temperature (F)	Stack gas flow at process conditions	Stack gas exit velocity	Date of Cons./Mod.	Operating Rate (max) or tank capacity
Change yes/no	36	0.3	78	na cu ft/min	na ft/sec.	Jan-05	12600 gallons

Fuel	Type of fuel used and heat input		Operating Characteristics	Percent of annual throughput of pollutants through this emission point				Normal operating time of this point			Normal Operating Rate
	Type of fuel	Heat Input (MM BTU/hr)		Dec-Feb	Mar-May	Jun-Aug	Sep-Nov	hrs/day	days/wk	wk/yr	
a	na	na		25	25	25	25	24	7	52	0 bbl/year
b											
c											

Air Pollutant Specific Information

Pollutant	Control Equipment Code	Control Equipment Efficiency	Emission Rate Average (lbs/hr)	Emission Rate Maximum (lbs/hr)	Emission Rate Annual (tons/yr)	Emission Estimation Method	Add, Change or Delete	Concentration in gases exiting at stack
Methane	0	0	0.000	0.000	0.000	3 & 5	Change	ppm/vol
Ethane	0	0	0.000	0.000	0.000	3 & 5	Change	ppm/vol
Total VOC's (incl. those below)	0	0	0.000	0.000	0.000	3 & 5	Change	ppm/vol
Propane	0	0	0.000	0.000	0.000	3 & 5	Change	ppm/vol
n-Butane	0	0	0.000	0.000	0.000	3 & 5	Change	ppm/vol
2 Methylpentane	0	0	0.000	0.000	0.000	3 & 5	Change	ppm/vol
n-Pentane	0	0	0.000	0.000	0.000	3 & 5	Change	ppm/vol
3 Methylpentane	0	0	0.000	0.000	0.000	3 & 5	Change	ppm/vol
Hexane	0	0	0.000	0.000	0.000	3 & 5	Change	ppm/vol
Benzene	0	0	0.000	0.000	0.000	3 & 5	Change	ppm/vol
Toluene	0	0	0.000	0.000	0.000	3 & 5	Change	ppm/vol
Ethylbenzene	0	0	0.000	0.000	0.000	3 & 5	Change	ppm/vol
Xylene	0	0	0.000	0.000	0.000	3 & 5	Change	ppm/vol
Cyclohexane	0	0	0.000	0.000	0.000	3 & 5	Change	ppm/vol
Heptane	0	0	0.000	0.000	0.000	3 & 5	Change	ppm/vol

Department of Environmental Quality
Air Quality Division
P.O. Box 82135
Baton Rouge, LA 70884-2135
(225) 765-0219

LOUISIANA

SINGLE POINT / AREA / VOLUME SOURCE

Emission Inventory Questionnaire (EIQ)

for Air Pollutants

Company Name	Plant location and name	Date of Submittal
Hilcorp Energy Company	Hogg Bayou	1/5/2005

Source ID number	Descriptive name of the equipment serviced by this stack or vent	Approximate location of stack or vent			
		UTM zone no.	15	Horizontal coordinate	500.725 mE
18	Methanol Day Tank (standby)			Vertical coordinagte	3287.581 mN

Stack and Discharge Physical Characteristics	Height of Stack (feet)	Diameter of Stack (feet)	Stack gas exit temperature (F)	Stack gas flow at process conditions	Stack gas exit velocity	Date of Cons./Mod.	Operating Rate (max) or tank capacity
Change yes/no	36	0.3	78	na cu ft/min	na ft/sec.	Jan-05	300.3 gallons

Fuel	Type of fuel used and heat input		Operating Characteristics	Percent of annual throughput of pollutants through this emission point				Normal operating time of this point			Normal Operating Rate
	Type of fuel	Heat Input (MM BTU/hr)		Dec-Feb	Mar-May	Jun-Aug	Sep-Nov	hrs/day	days/wk	wk/yr	
a	na	na		25	25	25	25	24	7	52	0 bbl/year
b											
c											

Air Pollutant Specific Information

Pollutant	Control Equipment Code	Control Equipment Efficiency	Emission Rate Average (lbs/hr)	Emission Rate Maximum (lbs/hr)	Emission Rate Annual (tons/yr)	Emission Estimation Method	Add, Change or Delete	Concentration in gases exiting at stack
Methane	0	0	0.000	0.000	0.000	3 & 5	Change	ppm/vol
Ethane	0	0	0.000	0.000	0.000	3 & 5	Change	ppm/vol
Total VOC's (incl. those below)	0	0	0.000	0.000	0.000	3 & 5	Change	ppm/vol
Propane	0	0	0.000	0.000	0.000	3 & 5	Change	ppm/vol
n-Butane	0	0	0.000	0.000	0.000	3 & 5	Change	ppm/vol
2 Methylpentane	0	0	0.000	0.000	0.000	3 & 5	Change	ppm/vol
n-Pentane	0	0	0.000	0.000	0.000	3 & 5	Change	ppm/vol
3 Methylpentane	0	0	0.000	0.000	0.000	3 & 5	Change	ppm/vol
Hexane	0	0	0.000	0.000	0.000	3 & 5	Change	ppm/vol
Benzene	0	0	0.000	0.000	0.000	3 & 5	Change	ppm/vol
Toluene	0	0	0.000	0.000	0.000	3 & 5	Change	ppm/vol
Ethylbenzene	0	0	0.000	0.000	0.000	3 & 5	Change	ppm/vol
Xylene	0	0	0.000	0.000	0.000	3 & 5	Change	ppm/vol
Cyclohexane	0	0	0.000	0.000	0.000	3 & 5	Change	ppm/vol
Heptane	0	0	0.000	0.000	0.000	3 & 5	Change	ppm/vol

Department of Environmental Quality
Air Quality Division
P.O. Box 82135
Baton Rouge, LA 70884-2135
(225) 765-0219

LOUISIANA

SINGLE POINT / AREA / VOLUME SOURCE

Emission Inventory Questionnaire (EIQ)

for Air Pollutants

Company Name	Plant location and name	Date of Submittal
Hilcorp Energy Company	Hogg Bayou	1/5/2005

Source ID number	*Descriptive name of the equipment serviced by this stack or vent*	Approximate location of stack or vent			
22	Sump Tank (emergency)	UTM zone no.	15	Horizontal coordinate	500.725 mE
				Vertical coordinagte	3287.581 mN

Stack and Discharge Physical Characteristics Change yes/no	Height of Stack (feet)	Diameter of Stack (feet)	Stack gas exit temperature (F)	Stack gas flow at process conditions	Stack gas exit velocity	Date of Cons./Mod.	Operating Rate (max) or tank capacity
	36	0.3	78	na cu ft/min	na ft/sec.	Jan-05	12012 gallons

Fuel	Type of fuel used and heat input		Operating Characteristics	Percent of annual throughput of pollutants through this emission point				Normal operating time of this point			Normal Operating Rate
	Type of fuel	Heat Input (MM BTU/hr)		Dec-Feb	Mar-May	Jun-Aug	Sep-Nov	hrs/day	days/wk	wk/yr	
a	na	na		25	25	25	25	24	7	52	0 bbl/year
b											
c											

Air Pollutant Specific Information

Pollutant	Control Equipment Code	Control Equipment Efficiency	Emission Rate Average (lbs/hr)	Emission Rate Maximum (lbs/hr)	Emission Rate Annual (tons/yr)	Emission Estimation Method	Add, Change or Delete	Concentration in gases exiting at stack
Methane	0	0	0.000	0.000	0.000	3 & 5	Change	ppm/vol
Ethane	0	0	0.000	0.000	0.000	3 & 5	Change	ppm/vol
Total VOC's (incl. those below)	0	0	0.000	0.000	0.000	3 & 5	Change	ppm/vol
Propane	0	0	0.000	0.000	0.000	3 & 5	Change	ppm/vol
n-Butane	0	0	0.000	0.000	0.000	3 & 5	Change	ppm/vol
2 Methylpentane	0	0	0.000	0.000	0.000	3 & 5	Change	ppm/vol
n-Pentane	0	0	0.000	0.000	0.000	3 & 5	Change	ppm/vol
3 Methylpentane	0	0	0.000	0.000	0.000	3 & 5	Change	ppm/vol
Hexane	0	0	0.000	0.000	0.000	3 & 5	Change	ppm/vol
Benzene	0	0	0.000	0.000	0.000	3 & 5	Change	ppm/vol
Toluene	0	0	0.000	0.000	0.000	3 & 5	Change	ppm/vol
Ethylbenzene	0	0	0.000	0.000	0.000	3 & 5	Change	ppm/vol
Xylene	0	0	0.000	0.000	0.000	3 & 5	Change	ppm/vol
Cyclohexane	0	0	0.000	0.000	0.000	3 & 5	Change	ppm/vol
Heptane	0	0	0.000	0.000	0.000	3 & 5	Change	ppm/vol

Department of Environmental Quality
Air Quality Division
P.O. Box 82135
Baton Rouge, LA 70884-2135
(225) 765-0219

LOUISIANA

SINGLE POINT / AREA / VOLUME SOURCE

Emission Inventory Questionnaire (EIQ)

for Air Pollutants

Company Name	Plant location and name	Date of Submittal
Hilcorp Energy Company	Hog Bayou	1/5/2005

Source ID number	Descriptive name of the equipment serviced by this stack or vent	Approximate location of stack or vent			
24	Pneumatic Transfer Pump	UTM zone no.	15	Horizontal coordinate	500.725 mE
				Vertical coordinagte	3287.581 mN

Stack and Discharge Physical Characteristics	Height of Stack (feet)	Diameter of Stack (feet)	Stack gas exit temperature (F)	Stack gas flow at process conditions	Stack gas exit velocity	Date of Cons./Mod.	Operating Rate (max) or tank capacity
Change yes/no	na	na	na	na cu ft/min	na ft/sec.	Jan-05	60 cuft/min

Fuel	Type of fuel used and heat input		Operating Characteristics	Percent of annual throughput of pollutants through this emission point				Normal operating time of this point			Normal Operating Rate
	Type of fuel	Heat Input (MM BTU/hr)		Dec-Feb	Mar-May	Jun-Aug	Sep-Nov	hrs/day	days/wk	wk/yr	
a	na	na		25	25	25	25	1	1	52	60 cuft/min
b											
c											

Air Pollutant Specific Information

Pollutant	Control Equipment Code	Control Equipment Efficiency	Emission Rate Average (lbs/hr)	Emission Rate Maximum (lbs/hr)	Emission Rate Annual (tons/yr)	Emission Estimation Method	Add, Change or Delete	Concentration in gases exiting at stack
Methane	0	0	140.219	140.219	3.646	5	Change	ppm/vol
Ethane	0	0	8.739	8.739	0.227	5	Change	ppm/vol
Total VOC's (incl. those below)	0	0	12.872	12.872	0.335	5	Change	ppm/vol
Propane	0	0	4.421	4.421	0.115	5	Change	ppm/vol
I-Butane	0	0	2.238	2.238	0.039	5	Change	ppm/vol
n-Butane	0	0	1.483	1.483	0.039	5	Change	ppm/vol
I-Pentane	0	0	1.061	1.061	0.028	5	Change	ppm/vol
n-Pentane	0	0	0.636	0.636	0.017	5	Change	ppm/vol
I-Hexane	0	0	3.025	3.025	0.079	5	Change	ppm/vol
n-Hexane	0	0	0.000	0.000	0.000	5	Change	ppm/vol
Benzene	0	0	0.000	0.000	0.000	5	Change	ppm/vol
Toluene	0	0	0.000	0.000	0.000	5	Change	ppm/vol
Ethylbenzene	0	0	0.000	0.000	0.000	5	Change	ppm/vol
Xylene	0	0	0.000	0.000	0.000	5	Change	ppm/vol
Decanes Plus	0	0	0.000	0.000	0.000	5	Change	ppm/vol

Department of Environmental Quality
Air Quality Division
P.O. Box 82135
Baton Rouge, LA 70884-2135
(225) 765-0219

LOUISIANA

SINGLE POINT / AREA / VOLUME SOURCE

Emission Inventory Questionnaire (EIQ)

for Air Pollutants

Company Name	Plant location and name	Date of Submittal
Hilcorp Energy Company	Hog Bayou	1/5/2005

Source ID number	Descriptive name of the equipment serviced by this stack or vent	Approximate location of stack or vent			
		UTM zone no.	15	Horizontal coordinate	500.725 mE
25	Pneumatic Transfer Pump			Vertical coordinagte	3287.581 mN

Stack and Discharge Physical Characteristics Change yes/no	Height of Stack (feet)	Diameter of Stack (feet)	Stack gas exit temperature (F)	Stack gas flow at process conditions	Stack gas exit velocity	Date of Cons./Mod.	Operating Rate (max) or tank capacity
	na	na	na	na cu ft/min	na ft/sec.	Jan-05	120 cuft/min

Fuel	Type of fuel used and heat input		Operating Characteristics	Percent of annual throughput of pollutants through this emission point				Normal operating time of this point			Normal Operating Rate
	Type of fuel	Heat Input (MM BTU/hr)		Dec-Feb	Mar-May	Jun-Aug	Sep-Nov	hrs/day	days/wk	wk/yr	
a	na	na		25	25	25	25	1	1	52	120 cuft/min
b											
c											

Air Pollutant Specific Information

Pollutant	Control Equipment Code	Control Equipment Efficiency	Emission Rate Average (lbs/hr)	Emission Rate Maximum (lbs/hr)	Emission Rate Annual (tons/yr)	Emission Estimation Method	Add, Change or Delete	Concentration in gases exiting at stack
Methane	0	0	280.438	280.438	7.291	5	Change	ppm/vol
Ethane	0	0	17.479	17.479	0.454	5	Change	ppm/vol
Total VOC's (incl. those below)	0	0	25.744	25.744	0.669	5	Change	ppm/vol
Propane	0	0	8.843	8.843	0.230	5	Change	ppm/vol
I-Butane	0	0	4.477	4.477	0.077	5	Change	ppm/vol
n-Butane	0	0	2.966	2.966	0.077	5	Change	ppm/vol
I-Pentane	0	0	2.122	2.122	0.055	5	Change	ppm/vol
n-Pentane	0	0	1.273	1.273	0.033	5	Change	ppm/vol
I-Hexane	0	0	6.049	6.049	0.157	5	Change	ppm/vol
n-Hexane	0	0	0.000	0.000	0.000	5	Change	ppm/vol
Benzene	0	0	0.000	0.000	0.000	5	Change	ppm/vol
Toluene	0	0	0.000	0.000	0.000	5	Change	ppm/vol
Ethylbenzene	0	0	0.000	0.000	0.000	5	Change	ppm/vol
Xylene	0	0	0.000	0.000	0.000	5	Change	ppm/vol
Decanes Plus	0	0	0.000	0.000	0.000	5	Change	ppm/vol

Department of Environmental Quality Air Quality Division P.O. Box 82135 Baton Rouge, LA 70884-2135 (225) 765-0219	**LOUISIANA** **SINGLE POINT / AREA / VOLUME SOURCE** **Emission Inventory Questionnaire (EIQ)** **for Air Pollutants**	

Company Name	Plant location and name	Date of Submittal
Hilcorp Energy Company	Hog Bayou	1/5/2005

Source ID number	Descriptive name of the equipment serviced by this stack or vent	Approximate location of stack or vent			
		UTM zone no.	15	Horizontal coordinate	500.725 mE
26	Pneumatic Transfer Pump			Vertical coordinagte	3287.581 mN

Stack and Discharge Physical Characteristics Change yes/no	Height of Stack (feet)	Diameter of Stack (feet)	Stack gas exit temperature (F)	Stack gas flow at process conditions	Stack gas exit velocity	Date of Cons./Mod.	Operating Rate (max) or tank capacity
	na	na	na	na cu ft/min	na ft/sec.	Jan-05	120 cuft/min

Fuel	Type of fuel used and heat input		Operating Characteristics	Percent of annual throughput of pollutants through this emission point				Normal operating time of this point			Normal Operating Rate
		Type of fuel	Heat Input (MM BTU/hr)	Dec-Feb	Mar-May	Jun-Aug	Sep-Nov	hrs/day	days/wk	wk/yr	120 cuft/min
	a	na	na	25	25	25	25	1	1	52	
	b										
	c										

Air Pollutant Specific Information

Pollutant	Control Equipment Code	Control Equipment Efficiency	Emission Rate Average (lbs/hr)	Emission Rate Maximum (lbs/hr)	Emission Rate Annual (tons/yr)	Emission Estimation Method	Add, Change or Delete	Concentration in gases exiting at stack
Methane	0	0	280.438	280.438	7.291	5	Change	ppm/vol
Ethane	0	0	17.479	17.479	0.454	5	Change	ppm/vol
Total VOC's (incl. those below)	0	0	25.744	25.744	0.669	5	Change	ppm/vol
Propane	0	0	8.843	8.843	0.230	5	Change	ppm/vol
I-Butane	0	0	4.477	4.477	0.077	5	Change	ppm/vol
n-Butane	0	0	2.966	2.966	0.077	5	Change	ppm/vol
I-Pentane	0	0	2.122	2.122	0.055	5	Change	ppm/vol
n-Pentane	0	0	1.273	1.273	0.033	5	Change	ppm/vol
I-Hexane	0	0	6.049	6.049	0.157	5	Change	ppm/vol
n-Hexane	0	0	0.000	0.000	0.000	5	Change	ppm/vol
Benzene	0	0	0.000	0.000	0.000	5	Change	ppm/vol
Toluene	0	0	0.000	0.000	0.000	5	Change	ppm/vol
Ethylbenzene	0	0	0.000	0.000	0.000	5	Change	ppm/vol
Xylene	0	0	0.000	0.000	0.000	5	Change	ppm/vol
Decanes Plus.	0	0	0.000	0.000	0.000	5	Change	ppm/vol

Department of Environmental Quality
Air Quality Division
P.O. Box 82135
Baton Rouge, LA 70884-2135
(225) 765-0219

LOUISIANA

SINGLE POINT / AREA / VOLUME SOURCE
Emission Inventory Questionnaire (EIQ)
for Air Pollutants

Company Name	Plant location and name	Date of Submittal
Hilcorp Energy Company	Hog Bayou	1/5/2005

Source ID number	Descriptive name of the equipment serviced by this stack or vent	Approximate location of stack or vent			
27	Chemical Pump	UTM zone no.	15	Horizontal coordinate	500.725 mE
				Vertical coordinagte	3287.581 mN

Stack and Discharge Physical Characteristics Change yes/no	Height of Stack (feet)	Diameter of Stack (feet)	Stack gas exit temperature (F)	Stack gas flow at process conditions	Stack gas exit velocity	Date of Cons./Mod.	Operating Rate (max) or tank capacity	
	na	na	na	na cu ft/min	na ft/sec.	Jan-05	0.24	cuft/min

Fuel

	Type of fuel used and heat input		Operating Characteristics	Percent of annual throughput of pollutants through this emission point				Normal operating time of this point			Normal Operating Rate
	Type of fuel	Heat Input (MM BTU/hr)		Dec-Feb	Mar-May	Jun-Aug	Sep-Nov	hrs/day	days/wk	wk/yr	0.24 cuft/min
a	na	na		25	25	25	25	24	7	52	
b											
c											

Air Pollutant Specific Information

Pollutant	Control Equipment Code	Control Equipment Efficiency	Emission Rate Average (lbs/hr)	Emission Rate Maximum (lbs/hr)	Emission Rate Annual (tons/yr)	Emission Estimation Method	Add, Change or Delete	Concentration in gases exiting at stack
Methane	0	0	0.561	0.561	2.457	5	Change	ppm/vol
Ethane	0	0	0.035	0.035	0.153	5	Change	ppm/vol
Total VOC's (incl. those below)	0	0	0.051	0.051	0.226	5	Change	ppm/vol
Propane	0	0	0.018	0.018	0.077	5	Change	ppm/vol
I-Butane	0	0	0.009	0.009	0.026	5	Change	ppm/vol
n-Butane	0	0	0.006	0.006	0.026	5	Change	ppm/vol
I-Pentane	0	0	0.004	0.004	0.019	5	Change	ppm/vol
n-Pentane	0	0	0.003	0.003	0.011	5	Change	ppm/vol
I-Hexane	0	0	0.012	0.012	0.053	5	Change	ppm/vol
n-Hexane	0	0	0.000	0.000	0.000	5	Change	ppm/vol
Benzene	0	0	0.000	0.000	0.000	5	Change	ppm/vol
Toluene	0	0	0.000	0.000	0.000	5	Change	ppm/vol
Ethylbenzene	0	0	0.000	0.000	0.000	5	Change	ppm/vol
Xylene	0	0	0.000	0.000	0.000	5	Change	ppm/vol
Decanes Plus	0	0	0.000	0.000	0.000	5	Change	ppm/vol

Department of Environmental Quality
Air Quality Division
P.O. Box 82135
Baton Rouge, LA 70884-2135
(225) 765-0219

LOUISIANA

SINGLE POINT / AREA / VOLUME SOURCE

Emission Inventory Questionnaire (EIQ)

for Air Pollutants

Company Name	Plant location and name	Date of Submittal
Hilcorp Energy Company	Hog Bayou	1/5/2005

Source ID number	Descriptive name of the equipment serviced by this stack or vent	Approximate location of stack or vent			
		UTM zone no.	15	Horizontal coordinate	500.725 mE
28	Chemical Pump			Vertical coordinagte	3287.581 mN

Stack and Discharge Physical Characteristics Change yes/no	Height of Stack (feet)	Diameter of Stack (feet)	Stack gas exit temperature (F)	Stack gas flow at process conditions	Stack gas exit velocity	Date of Cons./Mod.	Operating Rate (max) or tank capacity
	na	na	na	na cu ft/min	na ft/sec.	Jan-05	0.24 cuft/min

Fuel	Type of fuel used and heat input		Operating Characteristics	Percent of annual throughput of pollutants through this emission point				Normal operating time of this point			Normal Operating Rate
	Type of fuel	Heat Input (MM BTU/hr)		Dec-Feb	Mar-May	Jun-Aug	Sep-Nov	hrs/day	days/wk	wk/yr	
a	na	na		25	25	25	25	24	7	52	0.24 cuft/min
b											
c											

Air Pollutant Specific Information

Pollutant	Control Equipment Code	Control Equipment Efficiency	Emission Rate Average (lbs/hr)	Emission Rate Maximum (lbs/hr)	Emission Rate Annual (tons/yr)	Emission Estimation Method	Add, Change or Delete	Concentration in gases exiting at stack
Methane	0	0	0.561	0.561	2.457	5	Change	ppm/vol
Ethane	0	0	0.035	0.035	0.153	5	Change	ppm/vol
Total VOC's (incl. those below)	0	0	0.051	0.051	0.226	5	Change	ppm/vol
Propane	0	0	0.018	0.018	0.077	5	Change	ppm/vol
I-Butane	0	0	0.009	0.009	0.026	5	Change	ppm/vol
n-Butane	0	0	0.006	0.006	0.026	5	Change	ppm/vol
I-Pentane	0	0	0.004	0.004	0.019	5	Change	ppm/vol
n-Pentane	0	0	0.003	0.003	0.011	5	Change	ppm/vol
I-Hexane	0	0	0.012	0.012	0.053	5	Change	ppm/vol
n-Hexane	0	0	0.000	0.000	0.000	5	Change	ppm/vol
Benzene	0	0	0.000	0.000	0.000	5	Change	ppm/vol
Toluene	0	0	0.000	0.000	0.000	5	Change	ppm/vol
Ethylbenzene	0	0	0.000	0.000	0.000	5	Change	ppm/vol
Xylene	0	0	0.000	0.000	0.000	5	Change	ppm/vol
Decanes Plus	0	0	0.000	0.000	0.000	5	Change	ppm/vol

Department of Environmental Quality
Air Quality Division
P.O. Box 82135
Baton Rouge, LA 70884-2135
(225) 765-0219

LOUISIANA

SINGLE POINT / AREA / VOLUME SOURCE

Emission Inventory Questionnaire (EIQ)

for Air Pollutants

Company Name	Plant location and name	Date of Submittal
Hilcorp Energy Company	Hog Bayou	1/5/2005

Source ID number	Descriptive name of the equipment serviced by this stack or vent	Approximate location of stack or vent			
		UTM zone no.	15	Horizontal coordinate	500.725 mE
29	Chemical Pump			Vertical coordinagte	3287.581 mN

Stack and Discharge Physical Characteristics	Height of Stack (feet)	Diameter of Stack (feet)	Stack gas exit temperature (F)	Stack gas flow at process conditions	Stack gas exit velocity	Date of Cons./Mod.	Operating Rate (max) or tank capacity
Change yes/no	na	na	na	na cu ft/min	na ft/sec.	Jan-05	0.24 cuft/min

Fuel	Type of fuel used and heat input			Operating Characteristics	Percent of annual throughput of pollutants through this emission point				Normal operating time of this point			Normal Operating Rate
		Type of fuel	Heat Input (MM BTU/hr)		Dec-Feb	Mar-May	Jun-Aug	Sep-Nov	hrs/day	days/wk	wk/yr	0.24 cuft/min
	a	na	na		25	25	25	25	24	7	52	
	b											
	c											

Air Pollutant Specific Information

Pollutant	Control Equipment Code	Control Equipment Efficiency	Emission Rate Average (lbs/hr)	Emission Rate Maximum (lbs/hr)	Emission Rate Annual (tons/yr)	Emission Estimation Method	Add, Change or Delete	Concentration in gases exiting at stack
Methane	0	0	0.561	0.561	2.457	5	Change	ppm/vol
Ethane	0	0	0.035	0.035	0.153	5	Change	ppm/vol
Total VOC's (incl. those below)	0	0	0.051	0.051	0.226	5	Change	ppm/vol
Propane	0	0	0.018	0.018	0.077	5	Change	ppm/vol
I-Butane	0	0	0.009	0.009	0.026	5	Change	ppm/vol
n-Butane	0	0	0.006	0.006	0.026	5	Change	ppm/vol
I-Pentane	0	0	0.004	0.004	0.019	5	Change	ppm/vol
n-Pentane	0	0	0.003	0.003	0.011	5	Change	ppm/vol
I-Hexane	0	0	0.012	0.012	0.053	5	Change	ppm/vol
n-Hexane	0	0	0.000	0.000	0.000	5	Change	ppm/vol
Benzene	0	0	0.000	0.000	0.000	5	Change	ppm/vol
Toluene	0	0	0.000	0.000	0.000	5	Change	ppm/vol
Ethylbenzene	0	0	0.000	0.000	0.000	5	Change	ppm/vol
Xylene	0	0	0.000	0.000	0.000	5	Change	ppm/vol
Decanes Plus	0	0	0.000	0.000	0.000	5	Change	ppm/vol

Department of Environmental Quality Air Quality Division P.O. Box 82135 Baton Rouge, LA 70884-2135 (225) 765-0219	**LOUISIANA** **SINGLE POINT / AREA / VOLUME SOURCE** **Emission Inventory Questionnaire (EIQ)** **for Air Pollutants**	

Company Name	Plant location and name	Date of Submittal
Hilcorp Energy Company	Hogg Bayou	9/20/2004

Source ID number	Descriptive name of the equipment serviced by this stack or vent	Approximate location of stack or vent			
COMP1	Compressor Engine G 3516 TALE	UTM zone no.	15	Horizontal coordinate	500.725 mE
				Vertical coordinagte	3287.581 mN

Stack and Discharge Physical Characteristics Change yes/no	Height of Stack (feet)	Diameter of Stack (feet)	Stack gas exit temperature (F)	Stack gas flow at process conditions	Stack gas exit velocity	Date of Cons./Mod.	Operating Rate (max) or tank capacity
	20	1.00	855	2981 cu ft/min	62.86 ft/sec.	Sep-04	1340 hp

Fuel	Type of fuel used and heat input		Operating Characteristics	Percent of annual throughput of pollutants through this emission point				Normal operating time of this point			Normal Operating Rate
	Type of fuel	Heat input (MM BTU/hr)		Dec-Feb	Mar-May	Jun-Aug	Sep-Nov	hrs/day	days/wk	wk/yr	
a	nat gas	10.7		25	25	25	25	24	7	52	100 percent
b											
c											

Air Pollutant Specific Information

Pollutant	Control Equipment Code	Control Equipment Efficiency	Emission Rate Average (lbs/hr)	Emission Rate Maximum (lbs/hr)	Emission Rate Annual (tons/yr)	Emission Estimation Method	Add, Change or Delete	Concentration in gases exiting at stack
Oxides of Nitrogen	0	0	4.427	4.427	19.392	Manuf.	Add	ppm/vol
Carbon Monoxide	0	0	5.608	5.608	24.564	Manuf.	Add	ppm/vol
VOC's	0	0	0.266	0.266	1.164	Manuf.	Add	ppm/vol
Sulfur Dioxide	0	0	0.005	0.005	0.024	AP42	Add	ppm/vol
Particulate Matter	0	0	0.001	0.001	0.004	AP42	Add	ppm/vol
Formaldehyde	0	0	0.497	0.497	2.176	AP42	Add	ppm/vol
								ppm/vol
								ppm/vol
								ppm/vol
								ppm/vol
								ppm/vol
								ppm/vol
								ppm/vol
								ppm/vol
								ppm/vol
								ppm/vol

Department of Environmental Quality
Air Quality Division
P.O. Box 82135
Baton Rouge, LA 70884-2135
(225) 765-0219

LOUISIANA

SINGLE POINT / AREA / VOLUME SOURCE

Emission Inventory Questionnaire (EIQ)

for Air Pollutants

Company Name	Plant location and name	Date of Submittal
Hilcorp Energy Company	Hogg Bayou	1/5/2005

Source ID number	Descriptive name of the equipment serviced by this stack or vent	Approximate location of stack or vent			
COMP3	Compressor Engine 3606	UTM zone no.	15	Horizontal coordinate	500.725 mE
				Vertical coordinagte	3287.581 mN

Stack and Discharge Physical Characteristics Change yes/no	Height of Stack (feet)	Diameter of Stack (feet)	Stack gas exit temperature (F)	Stack gas flow at process conditions	Stack gas exit velocity	Date of Cons./Mod.	Operating Rate (max) or tank capacity
	20	1.00	867	12238 cu ft/min	258.07 ft/sec.	Jan-05	1775 hp

Fuel	Type of fuel used and heat input: Type of fuel	Heat Input (MM BTU/hr)	Operating Characteristics: Percent of annual throughput of pollutants through this emission point: Dec-Feb	Mar-May	Jun-Aug	Sep-Nov	Normal operating time of this point: hrs/day	days/wk	wk/yr	Normal Operating Rate
a	nat gas	11.8	25	25	25	25	24	7	52	100 percent
b										
c										

Air Pollutant Specific Information

Pollutant	Control Equipment Code	Control Equipment Efficiency	Emission Rate: Average (lbs/hr)	Maximum (lbs/hr)	Annual (tons/yr)	Emission Estimation Method	Add, Change or Delete	Concentration in gases exiting at stack
Oxides of Nitrogen	0	0	2.737	2.737	11.988	Manuf.	Add	ppm/vol
Carbon Monoxide	0	0	9.774	9.774	42.813	Manuf.	Add	ppm/vol
VOC's	0	0	2.815	2.815	12.330	Manuf.	Add	ppm/vol
Sulfur Dioxide	0	0	0.007	0.007	0.032	AP42	Add	ppm/vol
Particulate Matter	0	0	0.001	0.001	0.004	AP42	Add	ppm/vol
Formaldehyde	0	0	0.658	0.658	2.882	AP42	Add	ppm/vol
								ppm/vol
								ppm/vol
								ppm/vol
								ppm/vol
								ppm/vol
								ppm/vol
								ppm/vol
								ppm/vol
								ppm/vol

Potential to Emit Production Thresholds

Input Variables

Source Threshold	Major Source (100 tpy)	
Production	292000	*(bbl/yr)*
VOC_{Total}	97.87	*(tons/yr)*
VOC_{Limit}	74.120	*(tons/yr)*

Calculated Values Summary

Production	800	*(bbl/day)*
Limit	823	*(bbl/day)*
% Threshold	97	*(%)*

$$x = \frac{P(T - Vo + Vi)}{Vi}$$

x	=	production (bbl/day) required to generate T tons/yr VOC
P	=	production (bbl/year)
T	=	threshold value of VOC (25, 100, or 250 tons/yr)
Vo	=	total facility wide VOC
Vi	=	limiting value of VOC (loading, flash, etc)

You must produce	823	bbls/day to reach threshhold
Production is at	97	% of threshold. 95% or greater requires public notice.

§502.	§2104.

POLICY

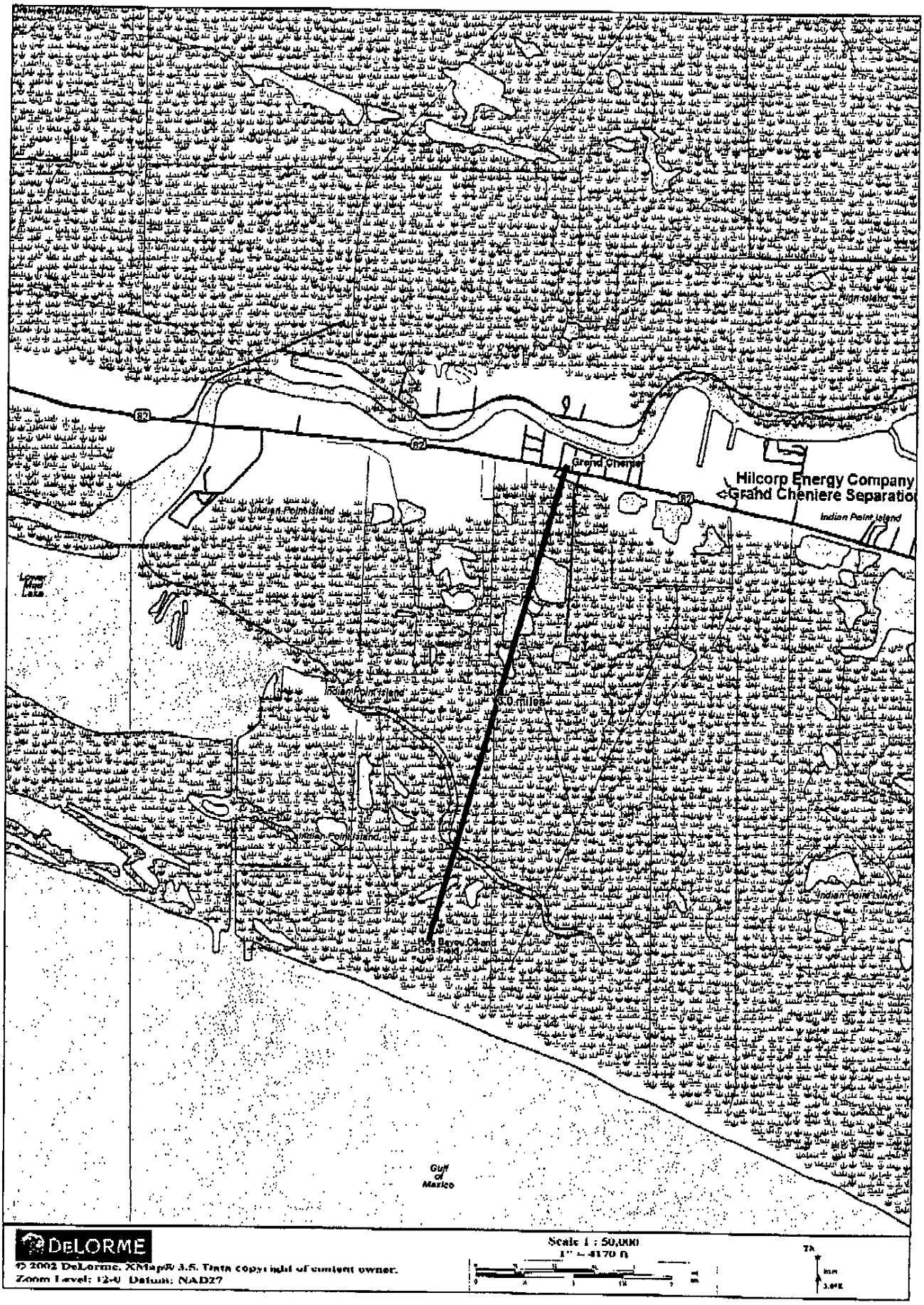
Grand Cheniere
Hilcorp Energy Company
Grand Cheniere Separatio
Indian Point Island
Indian Point Island
Indian Point Island
Indian Point Island
Indian Point Island
Hog Bayou Oil and Gas Field
Gulf of Mexico
DeLORME
© 2002 DeLorme. XMap® 3.5. Data copyright of content owner.
Zoom Level: 12-0 Datum: NAD27
Scale 1 : 50,000
1" = 4170 ft

Grand Chenier
Indian Point Island
Indian Point Island
3.0 miles
Indian Point Island
Hog Bayou Oil and Gas Field
DeLORME
© 2002 DeLorme. XMap® 3.5. Data copyright of content owner.
Zoom Level: 12.4 Datum: NAD27
Scale 1 : 25,000
1" = 2080 ft

YER2006001

COPY

original to IOA

copy to

Hilcorp Energy Company

Post Office Box 61229
Houston, TX 77208-1229

1201 Louisiana
Suite 1400
Houston, TX 77002

Phone: 713/209-2400
Fax: 713/209-2478

August 25, 2006

Office of Environmental Services
Louisiana Department of Environmental Quality
Post Office Box 4313
Baton Rouge, Louisiana 70821

Re: SOGA Amendment
Hilcorp Energy Company
Hog Bayou Field
AI No. 18637
Air Permit No. 0560-00069-03
Cameron Parish, LA

Hilcorp Energy Company requests an amendment to the referenced Standard Oil and Gas Air permit. This action will add an amine unit which will have a vent (AMINVNT) and a burner stack (AMINEX). The facility will continue to meet the eligibility requirements of the permit. All other emission sources and rates will remain the same.

Attached is the $90.00 application fee.

Should you have any questions, please call John Connolly at 225-753-4723, or e-mail me at ersses@cox.net.

Sincerely,

John T. Connolly
Agent for Hilcorp Energy Company

cc: Mr. Mike Schoch
Hilcorp Energy Company
1201 Louisiana Street, Suite 1400
Houston, Texas 77002

RECEIVED
AUG 30 2006
DEPT. OF ENVIRONMENTAL QUALITY
OFFICE OF ENVIRONMENTAL SERVICES
PERMIT DIVISION

Department of Environmental Quality
Air Quality Division
P.O. Box 82135
Baton Rouge, LA 70884-2135
(225) 765-0219

LOUISIANA

Application for Approval of Emissions of Air Pollutants

1 Please Type or Print

Company Name: Hilcorp Energy Company

Parent Company (if Company Name given above is a division):

Plant name (if any): Hogg Bayou Facility

Nearest town: Grand Chenier

Parish where located: Cameron

For Permit Section Use Only

2 PROPOSED ACTION Give a brief description of proposed action. Attach flow diagrams, illustration required to convey an understanding.

This application is for a modification to Standard Oil and Gas Air Permit No. 0560-00069-03.
This action will add an amine unit to scrub the CO2 out of the sales gas stream.
The heater exhaust on the amine reboiler will have emission point (AMINEX), and the
amine still vent will have an emission point of (AMINVNT).
All other emission points will remain the same.

3 OWNERSHIP AND USE OF ADJOINING PROPERTY INCLUDING PHYSICAL LOCATION Map or description attached.

DISTANCE TO (km): Texas _____ Arkansas _____ Mississippi _____ Alabama Same

4 TYPE OF APPLICATION

- ☐ a. Entirely new facility
- X b. Modification or expansion of existing facility
- ☐ c. Reconciliation
- d. Previously grandfathered, exempted or unpermitted
- e. Part 70 Permit
- ☐ f. General Permit _____ (type)

PROJECT FEE CALCULATION: Enter fee number, permit type, production capacity/thruput, and fee amount pursuant to LAC 33:III.Chapter 2.

FEE NO.	TYPE	CAPACITY	AMOUNT

The $90 application fee for a Standard Oil and Gas Permit is attached.

5 KEY DATES

Estimated date construction will commence: 8/06 Estimated date operation will commence: 8/06 .

Note: A completed Emission Inventory Questionnaire (EIQ) that reflects projected emissions from your facility as a whole after the project described in this application becomes operational must be submitted with this application. If you are submitting an application that is for modification or expansion of an existing facility, the Department of Environmental Quality must also have an EIQ for existing emissions. If you have already submitted an EIQ that is on file with the Department, it may fulfill this requirement. Consult instructions for further details.

RECEIVED
AUG 30 2006
DEPT. OF ENVIRONMENTAL QUALITY
OFFICE OF ENVIRONMENTAL SERVICES
PERMIT DIVISION

7 HISTORY OF PERMITTED EMISSIONS

List each emission level from facility permits (for unit specific permits, the history should be for the unit of concern only). Group by permit and show totals. Include as the last entry, the total emissions following the proposed change, entering the project name for "Permit number" and date of submittal for "Date permit issued". Consult instructions.

Permit number	Date permit issued	Pollutant	Permitted Emission Rate (tons/yr)
0560-00069-02	7/31/97	NOx	43.29
		CO	53.56
		VOC	79.53
		PM-10	.09
		SO2	.02
0560-00069-03	1/28/05	NOx	31.895
		CO	67.809
		VOC	93.37
		PM-10	.047
		SO2	.0602

9 APPLICABLE REGULATIONS, AIR POLLUTION CONTROL MEASURES, MONITORING, AND RECORDKEEPING

List in the following Tables 1-5, by emission point ID or identifier, state and federal pollution abatement programs and describe how compliance with these programs will be achieved, including test methods that will be used.

Hilcorp Energy Company
Hogg Bayou Field
Grand Cheniere, Louisiana Cameron Parish

TABLE 1: APPLICABLE LOUISIANA AND FEDERAL AIR QUALITY REQUIREMENTS

EMISSION POINT LIST

Insignificant sources include various small volume chemical tanks.

Emission Point No/ Identifier	Part 60 NSPS K	Ka	Kb	KKK	Ch 51	1313	1503	2111	2115	2103	1101	0919	2121	2113
01 – 07 Line Heaters	1-2	1-2	1-2	1-2		2-1			2-1			1-1		2-1
COMP1, 3	1-2	1-2	1-2	1-2		2-1	2-1	2-1	2-1		2-1	1-1	2-1	2-1
06, AMINEX Reboiler burner	1-2	1-2	1-2	1-2		2-1			2-1			1-1		2-1
15, AMINVNT Reboiler vent	1-2	1-2	1-2	1-2	2-1				2-1			1-1		2-1
SWD engine None	1-2	1-2	1-2	1-2		2-1	2-1	2-1			2-1	1-1		2-1
08,09,10,20, 21 Storage tanks	1-2	1-2	1-2	1-2	2-1					2-1		1-1		2-1
17,18,22 Storage tanks	1-2	1-2	1-2	1-2	2-1					2-1		1-1		2-1
23-30 Pneumatic pumps	1-2	1-2	1-2	1-2					2-1			1-1		2-1
11 Fugitives	1-2	1-2	1-2	1-2								1-1	2-1	2-1
Loading None	1-2	1-2	1-2	1-2	2-1							1-1		2-1

Hilcorp Energy Company
Hogg Bayou Field
Grand Cheniere, Louisiana Cameron Parish

TABLE 1: APPLICABLE LOUISIANA AND FEDERAL AIR QUALITY REQUIREMENTS

KEY TO MATRIX

1. - 1) The regulations have applicable requirements which apply to this particular emission source.
   - 2) The emission source may have an exemption from control stated in the regulation. The emission source may not have to be controlled but may have monitoring, recordkeeping, or reporting requirements.

2. - The regulations have applicable requirements which apply to this particular emission source but the source is currently exempt from these requirements due to meeting a specific criteria, such as it has not been constructed, modified or reconstructed since the regulations have been in place. If the specific criteria changes the source will have to comply at a future date.

3. - The regulations apply to this general type of emission source (i.e. vents, furnaces, towers, fugitives) but do not apply to this particular emission source.

Blank - The regulations clearly do not apply to this type of emission source.

Hilcorp Energy Company
Hogg Bayou Field
Grand Chénier, LA Cameron Parish

TABLE 2: STATE AND FEDERAL AIR QUALITY REQUIREMENTS

EMISSION POINT NO / IDENTIFIER	APPLICABLE REQUIREMENT	COMPLIANCE METHOD/ PROVISION	NOTES
COMP1 and 3	Stack Test Engine for NOx and CO	LDEQ Stack Test Policy Memorandum	

LDEQ-EDMS Document 35695808, Page 53 of 185

Hogg Bayou Field
Hilcorp Energy Company
Grand Chenier, Louisiana Cameron Parish

TABLE 3: COMPLIANCE MONITORING DEVICES, ACTIVITIES, OR METHODS

EMISSION POINT NO / IDENTIFIER	APPLICABLE COMPLIANCE REQUIREMENT	MONITORING, REPORTING & RECORDKEEPING (MRR) METHOD/PROVISIONS	NOTES
COMP1	Stack Test Engine	Test semi-annually for CO and NOx	
COMP3	Stack Test Engine	Test annually for CO and NOx	

LDEQ-EDMS Document 35695808, Page 54 of 185

10 CERTIFICATION OF COMPLIANCE WITH APPLICABLE REQUIREMENTS

Statement for Applicable Requirements for Which the Source Is In Compliance

Based on information and belief, formed after reasonable inquiry, the company and facility referenced in this application is in compliance with and will continue to comply with all applicable requirements pertaining to the sources covered by the permit application, as outlined in Tables 1 and 2 in the permit application.

For requirements promulgated as of the date of this certification with compliance dates effective during the permit term, I further certify that the company and facility referenced in this application will comply with such requirements on a timely basis and will continue to comply with such requirements.

CERTIFICATION: I certify, under provisions in Louisiana and United States law which provide criminal penalties for false statements, that based on information and belief formed after reasonable inquiry, the statements and information contained in this Application for Approval of Emissions of Air Pollutants, including all attachments thereto and the compliance statement above, are true, accurate, and complete.

CERTIFICATION: I certify that the engineering calculations, drawings, and design are true and accurate to the best of my knowledge.

11 PERSONNEL

a. Responsible Official

Name: Mr. Mike Schoch		
Title: Regulatory, Environmental, Safety Coordinator		
Company: Hilcorp Energy Company		
Suite, mail drop, or division: Suite 1400		
Street or P.O. Box: 1201 Louisiana Street		
City: Houston	State: TX	Zip: 77002
Business phone: 713-209-2416		

Signature of responsible official(s) (See 40 CFR 70.2)
Date: 8/28/06
Date

b. Professional Engineer

Name: John T. Connolly		
Title:		
Company: Shinteaux Environmental Services, Inc.		
Suite, mail drop, or division:		
Street or P.O. Box: 19345 Point O Woods Court		
City: Baton Rouge	State: LA	Zip: 70809
Business phone: 225-753-4723 fax 225-753-4661		

Signature of Professional Engineer Not required for Standard Oil and Gas Permit
Date
Louisiana Registration No.

Department of Environmental Quality
Air Quality Division
P. O. Box 82135
Baton Rouge, Louisiana 70884-2135
(225) 765-0219

LOUISIANA

Emission Inventory Questionnaire (EIQ) for Air Pollutants

1 Please Type or Print	Company Name: Hilcorp Energy Company	For Permit Section Use Only
	Parent Company (if Company Name given above is a division)	
	Plant name (if any): Hog Bayou Facility	
	Nearest town: Grand Chenier — Parish where located: Cameron	

2 TYPE OF EIQ _ a. *ONLY* presently existing ___ b. *BOTH* proposed additional emissions associated with an emissions application for a permit, variance, or exemption *AND* presently existing emissions expected to be still existing after facility or modification described in application becomes operational

3 CONFIDENTIALITY If you are requesting confidentiality for all information *except air pollutant emission rates*, check ___box. (You must attach justification for confidentiality request)

4 ORGANIZATIONAL ACTIVITIES

Dates of week normally *NOT* operating: _ Mon _ Tue _ Wed _ Thu _ Fri _ Sat _ Sun

Days per year facility typically operates: 365

Peak production season (list months): _____

Daily operating schedule: X 24-hours OR specify number of hours

Approximate number of employees at this location: **Unmanned**

Details of facilities that, as a whole, operate intermittently:

Ownership:

X corporation, partnership, or sole proprietorship _ regulated utility _ municipal government
_ state government _ federal government _ other, specify _____

Industrial category--Indicate Standard Industrial Classification (SIC) Code(s) that apply to facility:

1311 _____ _____

Description of operation with emphasis on air pollution sources. Use attachments if more space is needed.

Typical oil and gas production facility. Crude oil, natural gas, and saltwater are produced from natural reservoirs through deep wells. The oil, saltwater, and gas are separated in pressurized vessels. The oil is stored in fixed roof tanks prior to transport by pipeline. The gas is compressed for sales to a pipeline. The saltwater is injected. The produced saltwater is stored in fixed roof tanks prior to deep well injection.

5. Summary of Emission Sources
Hilcorp Energy Company - Hogg Bayou Facility

	Annual (TPY)
a. Particulate Matter	0.096
b. Sulfur Dioxides	0.0642
c. Nitrogen Oxides	32.539
d. Carbon Monoxide	68.35
e. Volitale Organic Compounds (Total)	94.417
Propane	21.842
i-Butane	0.276
n-Butane	15.834
i-Pentane	0.199
n-Pentane	5.79
f. Toxic Volitale Organic Compounds (Total)	5.858
(regulated under LAC 33:III Chapter 51)	
Benzene	0.101
Toluene	0.192
Ethylbenzene	0.071
Xylene	0.442
n-Hexane	0
Formaldehyde	5.052
g. Non-regulated VOC's	
Methane	102.702
Ethane	11.893

6 PERSONNEL

a. Manager of Facility on location at plant site

Name Mr. Mike Schoch		
Title Regulatory, Environmental, and Safety Coordinator		
Company Hilcorp Energy Company		
Suite, mail drop, or division Suite 1400		
Street or P.O. Box 1201 Louisiana Street		
City Houston	State TX	Zip 77002
Business phone 713-209-2416		

b. Person to contact at site about air pollution control

Name Same as a.
Title Contract Gauger
Company
Suite, mail drop, or division
Business phone 318-236-9380 (pager)

c. Headquarters of other off-site contact (see instructions)

Name Same as a.		
Title		
Company		
Suite, mail drop, or division		
Street or P.O. Box		
City	State	Zip
Business phone		

d. Person who prepared this report
_ a _ b _ c x other (specify below)

Name Mr. John Connolly		
Title President		
Company Shinteaux Environmental Services, Inc.		
Suite, mail drop, or division		
Street or P.O. Box 19345 Point O Woods Court		
City Baton Rouge	State LA	Zip 70809
Business phone 225-753-4723 225-753-4661 ersses@cox.net		

CERTIFICATION: I certify, under provisions in Louisiana and United States law which provide criminal penalties for false statements, that based on information and belief formed after reasonable inquiry, the statements and information contained in this Emission Inventory Questionnaire (EIQ) for Air Pollutants, including all attachments thereto, are true, accurate, and complete.

Signature of responsible official(s) (See 40 CFR 70.2)
Date 8/28/06
Date

Hilcorp Energy Company - Hogg Bayou Facility

Emission Point No.	Description	Operating Rate (Max) or Tank Capacity	Operating Schedule (H/D)	(D/W)	(W/Y)
06	Glycol Reboiler Burner	1.2 mmbtu/hr	24	7	52
08	Oil Storage Tank	300 bbl	24	7	52
09	Oil Storage Tank	300 bbl	24	7	52
10	Saltwater ~~Oil~~ Storage Tank (standby)	12000 bbl	24	7	52
11	Fugitives	na	24	7	52
15	Glycol Dehydrator Vent	14 mmscfd	24	7	52
16	Flash Gas/Emergency Vent	na	24	7	52
17	Methanol Storage Tank (standby)	300 bbl	24	7	52
18	Methanol Day Tank (standby)	300 gal	24	7	52
20	Saltwater Storage Tank	1500 bbl	24	7	52
21	Saltwater Storage Tank	1500 bbl	24	7	52
22	Sump Tank (emergency)	286 bbl	24	7	52
24	Gas Operated Pump (M4)	60 cuft/min	1	1	52
25	Gas Operated Pump (M8)	120 cuft/min	1	1	52
26	Gas Operated Pump (M8)	120 cuft/min	1	1	52
27	Gas Operated Chemical Pump	.24 cuft/min	24	7	52
28	Gas Operated Chemical Pump	.24 cuft/min	24	7	52
29	Gas Operated Chemical Pump	.24 cuft/min	24	7	52
COMP1	Compressor Engine	1340 hp	24	7	52
COMP3	Compressor Engine	1775 hp	24	7	52
AMINEX	Amine Reboiler Exhaust	1.5 mmbtu/hr	24	7	52
AMINVNT	Amine Reboiler Still Vent	14 mmscfd	24	7	52

Insignificant Activities List

						VOC
01	Line Heater	.5 mmbtu/hr	24	7	52	0.012
02	Line Heater	.5 mmbtu/hr	24	7	52	0.012
03	Line Heater	.75 mmbtu/hr	24	7	52	0.018
04	Line Heater	1.5 mmbtu/hr	24	7	52	0.036
05	Line Heater	1.5 mmbtu/hr	24	7	52	0.036
07	Heater Treater	.5 mmbtu/hr	24	7	52	0.012
HT1	Heater Treater	.5 mmbtu/hr	25	7	52	0.012

0.138 tpy

Emission Worksheet
Site Name: Hilcorp Energy Company - Hogg Bayou Facility

SOURCE	CO	NOx	PM	SO2	Methane	Ethane	Propane	I-Butane	N-Butane	I-Pentane	N-Pentane	Total VOC's	Benzene	Toluene	E-benzene	Xylene	n-Hexane	Formaldehyde	Total Toxic VOC's
06	0.432	0.515	0.039	0.003	0.012							0.028							0
08						3.568	9.936		7.702		2.807	37.596	0.046	0.088	0.035	0.219			0.388
09						3.568	9.936		7.702		2.807	37.596	0.046	0.088	0.035	0.219			0.388
10												0							0
11					37.731							1.435	0.009	0.016	0.001	0.004			0.03
15					0.005	0.002	0.003	0.004	0.004	0.003	0.003	0.118							0
16												0							0
17												0							0
18												0							0
20						0.036	0.099		0.077		0.028	0.376							0
21						0.036	0.099		0.077		0.028	0.376							0
22												0							0
23												0							0
24					3.646	0.227	0.115	0.039	0.039	0.028	0.017	0.335							0
25					7.291	0.454	0.23	0.077	0.077	0.055	0.033	0.669							0
26					7.291	0.454	0.23	0.077	0.077	0.055	0.033	0.669							0
27					2.457	0.153	0.077	0.026	0.026	0.019	0.011	0.226							0
28					2.457	0.153	0.077	0.026	0.026	0.019	0.011	0.226							0
29					2.457	0.153	0.077	0.026	0.026	0.019	0.011	0.226							0
30												0							0
COMP1	24.564	19.392	0.004	0.024								1.164						2.17	2.17
COMP3	42.813	11.988	0.004	0.0332								12.33						2.882	2.882
AMINEX	0.541	0.644	0.049	0.004	0.015							0.035							
AMINVNT					39.34	3.089	0.963	0.001	0.001	0.001	0.001	1.012							0
																			0
TOTALS:	68.35	32.539	0.096	0.0642	102.702	11.893	21.842	0.276	15.834	0.199	5.79	94.417	0.101	0.192	0.071	0.442	0	5.052	5.858

* Figures in tons per year.

LDEQ-EDMS Document 35695808, Page 60 of 185

Department of Environmental Quality
Air Quality Division
P.O. Box 82135
Baton Rouge, LA 70884-2135
(225) 765-0219

LOUISIANA

SINGLE POINT / AREA / VOLUME SOURCE

Emission Inventory Questionnaire (EIQ)

for Air Pollutants

Company Name	Plant location and name	Date of Submittal
Hilcorp Energy Company	Hogg Bayou Facility	8/24/2006

Source ID number	Descriptive name of the equipment serviced by this stack or vent	Approximate location of stack or vent			
AMINEX	Amine Reboiler Exhaust	UTM zone no.	15	Horizontal coordinate	500.725 mE
				Vertical coordinagte	3287.581 mN

Stack and Discharge Physical Characteristics Change yes/no	Height of Stack (feet)	Diameter of Stack (feet)	Stack gas exit temperature (F)	Stack gas flow at process conditions	Stack gas exit velocity	Date of Cons./Mod.	Operating Rate (max) or tank capacity
	56	0.8	500	476.00 cu ft/min	14.57 ft/sec.	Aug-06	1.5 mmbtu/hr

Fuel

Type of fuel used and heat input	Type of fuel	Heat Input (MM BTU/hr)
a	nat gas	1.5
b		
c		

Operating Characteristics

Percent of annual throughput of pollutants through this emission point				Normal operating time of this point			Normal Operating Rate
Dec-Feb	Mar-May	Jun-Aug	Sep-Nov	hrs/day	days/wk	wk/yr	1.5 mmbtu/hr
25	25	25	25	24	7	52	

Air Pollutant Specific Information

Pollutant	Control Equipment Code	Control Equipment Efficiency	Emission Rate Average (lbs/hr)	Emission Rate Maximum (lbs/hr)	Emission Rate Annual (tons/yr)	Emission Estimation Method	Add, Change or Delete	Concentration in gases exiting at stack
Oxides of Nitrogen	0	0	0.147	0.147	0.644	3	Add	ppm/vol
Carbon Monoxide	0	0	0.124	0.124	0.541	3	Add	ppm/vol
VOC's	0	0	0.008	0.008	0.035	3	Add	ppm/vol
Sulfur Dioxide	0	0	0.001	0.001	0.004	3	Add	ppm/vol
Particulate Matter	0	0	0.011	0.011	0.049	3	Add	ppm/vol
Methane	0	0	0.003	0.003	0.015	3	Add	ppm/vol
								ppm/vol
								ppm/vol
								ppm/vol
								ppm/vol
								ppm/vol
								ppm/vol
								ppm/vol
								ppm/vol
								ppm/vol
								ppm/vol

External Combustion Burner Sources: Heater Treaters, Line Heaters, Reboiler Firebox, etc.

Description:	Amine Reboiler Exhaust

Source ID:	AMINEX

Date:	8/24/2006

Burner Data	
Manufacturer	na
Serial Number	na
Model Number	na
Burner Rating (mmbtu/hr)	1.5
Burner Utilized (mmbtu/hr)	1.5
Thermal Efficiency (%)	95
Average Firing Rate (%)	100
Excess Air (%)	10

Location of stack or vent		
UTM Zone	15	
Horizontal	500.725	mE
Vertical	3287.581	mN

Identification	
EID	
EPN	
FIN	
CIN	

Control Efficiency		
Control		
NOx	0	%
CO	0	%
VOC	0	%

Action:	Add

Fuel Data	
Burner Size (mbtu/hr)	1500
Fuel Heat of Combustion (btu/scf)	1100
Fuel Type	Natural Gas
Fuel Consumption (scf/hr)	1363.6
Fuel Consumption (mcfd)	32.7
AP-42 btu Adjusted Fuel (scf/hr)	1470.59

Stack and Discharge Physical Characteristics		
Height above grade	56	feet
Diameter at discharge	0.8	feet
Area of stack	0.54	ft ^2
Stack exit temperature	500	deg F

Operating Characteristics		
Normal Operating Time	8760	
hours/day	24	
days/week	7	
weeks/year	52	52.145

Facility Data	
Operator	Hilcorp Energy Company
Field Name	Hogg Bayou Facility
Site Name	

Emission Factors Utilized		
Pollutant	Factor	Units
PM	7.6	lb/mmscf
SOx	0.6	lb/mmscf
NOx	100	lb/mmscf
CO	84	lb/mmscf
VOC	5.5	lb/mmscf
Methane	2.3	lb/mmscf

AP-42 and GRID-HAPCalc Air Emission Computation Factors								
Equipment	units	PM	SOx	NOx	CO	VOC	Methane	Reference
Commercial (.3 to 10)	lb/mmscf	7.6	0.6	100	84	5.5	2.3	AP-42 Table 1.4-1, -2
Residential Boiler (<.3)	lb/mmscf	7.6	0.6	94	40	11	2.3	AP-42 Table 1.4-1, -2
			AP-42 Factors @ 1020 btu/scf Fuel Gas					

Annual Process Rate =	12.88	mmscf/yr
Percentage of Maximum Emissions Potential =	100	%

BEST COPY

Department of Environmental Quality
Air Quality Division
P.O. Box 82135
Baton Rouge, LA 70884-2135
(225) 765-0219

LOUISIANA

SINGLE POINT / AREA / VOLUME SOURCE

Emission Inventory Questionnaire (EIQ)

for Air Pollutants

Company Name	Plant location and name	Date of Submittal
Hilcorp Energy Company	Hogg Bayou	8/24/2006

Source ID number	Descriptive name of the equipment serviced by this stack or vent	Approximate location of stack or vent			
		UTM zone no.	15	Horizontal coordinate	500.725 mE
AMINVNT	Amine Reboiler Still Vent			Vertical coordinagte	3287.581 mN

Stack and Discharge Physical Characteristics Change yes/no	Height of Stack (feet)	Diameter of Stack (feet)	Stack gas exit temperature (F)	Stack gas flow at process conditions	Stack gas exit velocity	Date of Cons./Mod.	Operating Rate (max) or tank capacity
	na	na	na	na cu ft/min	na ft/sec.	Aug-06	14.00 mmscfd

Fuel	Type of fuel used and heat input		Operating Characteristics	Percent of annual throughput of pollutants through this emission point				Normal operating time of this point			Normal Operating Rate
	Type of fuel	Heat Input (~~MM BTU/hr~~)		Dec-Feb	Mar-May	Jun-Aug	Sep-Nov	hrs/day	days/wk	wk/yr	14.00 mmscfd
a	na	na		25	25	25	25	24	7	52	
b											
c											

Air Pollutant Specific Information

Pollutant	Control Equipment Code	Control Equipment Efficiency	Emission Rate Average (lbs/hr)	Maximum (lbs/hr)	Annual (tons/yr)	Emission Estimation Method	Add, Change or Delete	Concentration in gases exiting at stack
Methane	99	0	8.982	8.982	39.340	5	Add	ppm/vol
Ethane	99	0	0.705	0.705	3.089	5	Add	ppm/vol
Total VOC's (incl. those below)	99	0	0.231	0.231	1.012	5	Add	ppm/vol
Propane	99	0	0.220	0.220	0.963	5	Add	ppm/vol
I-Butane	99	0	0.000	0.000	0.001	5	Add	ppm/vol
n-Butane	99	0	0.000	0.000	0.001	5	Add	ppm/vol
I-Pentane	99	0	0.000	0.000	0.001	5	Add	ppm/vol
n-Pentane	99	0	0.000	0.000	0.001	5	Add	ppm/vol
n-Hexane	99	0	0.000	0.000	0.000	5	Add	ppm/vol
Other Hexanes	99	0	0.009	0.009	0.037	5	Add	ppm/vol
Heptanes	99	0	0.002	0.002	0.008	5	Add	ppm/vol
Benzene	99	0	0.000	0.000	0.000	5	Add	ppm/vol
Toluene	99	0	0.000	0.000	0.000	5	Add	ppm/vol
Ethylbenzene	99	0	0.000	0.000	0.000	5	Add	ppm/vol
Xylene	99	0	0.000	0.000	0.000	5	Add	ppm/vol

Gas Dehydrator Still Vent

Description:	Amine Reboiler Still Vent

Source ID:	AMINVNT

Date:	8/24/2006

Reboiler Data	
Dry Gas Rate (mmscfd)	14.00
Dry Gas Water (lb/mmscf)	7
Glycol Pump	Kimray
Pump Speed	na
Controls (cnd./burn.)	no

Location of stack or vent		
UTM Zone	15	
Horizontal	500.725	mE
Vertical	3287.581	mN

Identification	
EID	
EPN	
FIN	
CIN	

Control Efficiency		
Control		
NOx	0	%
CO	0	%
VOC	0	%

Action:	Add

Operating Characteristics		
Normal Operating Time	8760	
hours/day	24.0	
days/week	7.0	
weeks/year	52	52.145

Facility Data	
Operator	Hilcorp Energy Company
Field Name	Hogg Bayou
Site Name	

Emissions Data From GRI-GLYCalc Program

Component	lb/hr	tons/year
Methane	8.982	39.34
Ethane	0.705	3.089
Propane	0.22	0.963
Isobutane	0	0.001
n-Butane	0	0.001
I-Pentane	0	0.001
n-Pentane	0	0.001
n-Hexane	0	0
Other Hexanes	0.009	0.037
Heptanes	0.002	0.008
2,2,4-TMP	0	0
Benzene	0	0
Toluene	0	0
Ethylbenzene	0	0
Xylene	0	0
Total HC	0	0
Total VOC	0.231	1.012
Total HAP	0	0

AMINECalc Stream Results

Stream 5 Acid Gas Flow from Regenerator

	----- Controlled -----		----- Uncontrolled -----	
Component	[lb/h]	[ton/yr]	[lb/h]	[ton/yr]
H2S	0.000	0.000	0.000	0.000
CO2	891.768	3905.879	891.768	3905.879
MDEA	0.000	0.000	0.000	0.000
H2O	0.000	0.000	0.000	0.000
N2	0.004	0.018	0.008	0.035
C1	4.491	19.670	8.982	39.340
C2	0.353	1.544	0.705	3.089
C3	0.110	0.482	0.220	0.963
i-C4	0.000	0.000	0.000	0.001
n-C4	0.000	0.000	0.000	0.001
i-C5	0.000	0.001	0.000	0.001
n-C5	0.000	0.000	0.000	0.001
Hexanes	0.004	0.019	0.009	0.037
Heptanes	0.001	0.004	0.002	0.008
Total:	896.731	3927.617	901.694	3949.354

Pressure	N/A	[psia]
Temperature	N/A	[F]

AMINECalc Input Data

Project Name:	Untitled Type project description here	
Model:	Gas Model	
Amine:	MDEA	
Lean Amine Pressure:	800.000	[psia]
Lean Amine Temperature:	100.000	[F]
Lean Amine Flowrate:	200.000	[gal/min]
Lean Amine Weight:	30.000	[%]
H2S Loading:	0.010	[mol/mol]
CO2 Loading:	0.010	[mol/mol]
Emission Control Efficiency	50.000	
Operating Hours/Day:	24	[hours/day]
Operating Days/Year:	365	[days/year]
Gas Feed Pressure:	935.000	[psia]
Gas Feed Temperature:	100.000	[F]
Gas Feed Flowrate:	14.000	[MMSCFD]
Number of Trays in Column:	20	
Flash Tank Pressure:	100.000	[psia]
H2S	0.00000	[%]
CO2	2.56200	[%]
MDEA	0.00000	[%]
H2O	0.00000	[%]
N2	0.19700	[%]
O2	0.00000	[%]
C1	91.81000	[%]
C2	3.10800	[%]
C3	0.94200	[%]
i-C4	0.35300	[%]
n-C4	0.24100	[%]
i-C5	0.15000	[%]
n-C5	0.09800	[%]
Hexanes	0.14600	[%]
Heptanes	0.39300	[%]
Octanes	0.00000	[%]
Nonanes	0.00000	[%]
C10+	0.00000	[%]
MeSH	0.00000	[%]
EtSH	0.00000	[%]
Benzene	0.00000	[%]
Toluene	0.00000	[%]
Ethylbenzene	0.00000	[%]
Xylenes	0.00000	[%]
n-C6	0.00000	[%]
224Trimeth	0.00000	[%]

AMINECalc Stream Results

Stream 1 Gas Feed to Absorber

Component	Mol Fraction	[lb/h]	[ton/yr]
H2S	0.000000	0.000	0.000
CO2	0.025620	1733.193	7591.257
MDEA	0.000000	0.000	0.000
H2O	0.000000	0.000	0.000
N2	0.001970	84.830	371.549
C1	0.918100	22640.810	99165.070
C2	0.031080	1436.584	6292.130
C3	0.009420	638.523	2796.682
i-C4	0.003530	315.389	1381.381
n-C4	0.002410	215.322	943.095
i-C5	0.001500	166.360	728.646
n-C5	0.000980	108.689	476.049
Hexanes	0.001460	193.404	847.095
Heptanes	0.003930	605.339	2651.338
Total:	1.000000	28138.440	123244.300

Pressure 935.000 [psia]
Temperature 100.000 [F]

Stream 2 Rich Amine From Absorber

Component	Mol Fraction	[lb/h]	[ton/yr]
H2S	0.000600	88.130	386.003
CO2	0.005330	1006.085	4406.578
MDEA	0.060450	30905.190	135362.400
H2O	0.932370	72074.060	315679.000
N2	0.000000	0.146	0.638
C1	0.001190	81.725	357.950
C2	0.000040	5.803	25.417
C3	0.000010	2.138	9.363
i-C4	0.000000	0.047	0.207
n-C4	0.000000	0.032	0.142
i-C5	0.000000	0.036	0.157
n-C5	0.000000	0.023	0.103
Hexanes	0.000000	0.224	0.979
Heptanes	0.000000	0.182	0.797
Total:	1.000000	104163.800	456229.800

Pressure 935.000 [psia]
Temperature 105.073 [F]

AMINECalc Stream Results

Stream 3 Flash Gas Vent Flow from Flash Tank

	----- Controlled -----		----- Uncontrolled -----	
Component	[lb/h]	[ton/yr]	[lb/h]	[ton/yr]
H2S	0.010	0.042	0.019	0.085
CO2	0.183	0.800	0.183	0.800
MDEA	0.000	0.001	0.000	0.001
H2O	0.450	1.971	0.900	3.942
N2	0.069	0.301	0.138	0.603
C1	36.372	159.306	72.744	318.611
C2	2.549	11.164	5.098	22.327
C3	0.959	4.200	1.918	8.401
i-C4	0.024	0.104	0.047	0.206
n-C4	0.016	0.071	0.032	0.141
i-C5	0.018	0.077	0.035	0.155
n-C5	0.012	0.051	0.023	0.101
Hexanes	0.108	0.471	0.215	0.941
Heptanes	0.090	0.395	0.180	0.789
Total:	40.860	178.952	81.532	357.104

Pressure 100.000 [psia]
Temperature 105.073 [F]

Stream 4 Rich Amine Feed to Regenerator

Component	Mol Fraction	[lb/h]	[ton/yr]
H2S	0.000600	88.111	385.919
CO2	0.005330	1005.902	4405.778
MDEA	0.060520	30905.190	135362.400
H2O	0.933410	72073.160	315675.100
N2	0.000000	0.008	0.035
C1	0.000130	8.982	39.340
C2	0.000010	0.705	3.089
C3	0.000000	0.220	0.963
i-C4	0.000000	0.000	0.001
n-C4	0.000000	0.000	0.001
i-C5	0.000000	0.000	0.001
n-C5	0.000000	0.000	0.001
Hexanes	0.000000	0.009	0.037
Heptanes	0.000000	0.002	0.008
Total:	1.000000	104082.300	455872.700

Pressure 100.000 [psia]
Temperature 105.073 [F]

AMINECalc Stream Results

Stream 5 Acid Gas Flow from Regenerator

Component	----- Controlled ----- [lb/h]	[ton/yr]	----- Uncontrolled ----- [lb/h]	[ton/yr]
H2S	0.000	0.000	0.000	0.000
CO2	891.768	3905.879	891.768	3905.879
MDEA	0.000	0.000	0.000	0.000
H2O	0.000	0.000	0.000	0.000
N2	0.004	0.018	0.008	0.035
C1	4.491	19.670	8.982	39.340
C2	0.353	1.544	0.705	3.089
C3	0.110	0.482	0.220	0.963
i-C4	0.000	0.000	0.000	0.001
n-C4	0.000	0.000	0.000	0.001
i-C5	0.000	0.001	0.000	0.001
n-C5	0.000	0.000	0.000	0.001
Hexanes	0.004	0.019	0.009	0.037
Heptanes	0.001	0.004	0.002	0.008
Total:	896.731	3927.617	901.694	3949.354

Pressure	N/A	[psia]
Temperature	N/A	[F]

Stream 6 Lean Amine from Regenerator

Component	Mol Fraction	[lb/h]	[ton/yr]
H2S	0.000610	88.372	387.061
CO2	0.000610	114.134	499.900
MDEA	0.060780	30905.200	135362.500
H2O	0.938000	72112.130	315845.800
N2	0.000000	0.000	0.000
C1	0.000000	0.000	0.000
C2	0.000000	0.000	0.000
C3	0.000000	0.000	0.000
i-C4	0.000000	0.000	0.000
n-C4	0.000000	0.000	0.000
i-C5	0.000000	0.000	0.000
n-C5	0.000000	0.000	0.000
Hexanes	0.000000	0.000	0.000
Heptanes	0.000000	0.000	0.000
Total:	1.000000	103219.800	452095.200

Pressure	800.000	[psia]
Temperature	100.000	[F]

AMINECalc Stream Results

Stream 7 Sweet Gas Flow from Absorber

Component	Mol Fraction	[lb/h]	[ton/yr]
H2S	0.000000	0.242	1.058
CO2	0.012630	841.242	3684.578
MDEA	0.000000	0.009	0.039
H2O	0.001400	38.072	166.753
N2	0.002000	84.684	370.910
C1	0.928980	22559.090	98807.130
C2	0.031430	1430.781	6266.713
C3	0.009530	636.385	2787.319
i-C4	0.003580	315.342	1381.173
n-C4	0.002450	215.290	942.954
i-C5	0.001520	166.325	728.490
n-C5	0.000990	108.665	475.947
Hexanes	0.001480	193.181	846.117
Heptanes	0.003990	605.157	2650.541
Total:	1.000000	27194.460	119109.700

Pressure	800.000	[psia]
Temperature	100.229	[F]

LAFAYETTE LABORATORY
500 AMBASSADOR CAFFERY PKWY
SCOTT, LOUISIANA 70583-1750
PHONE (337) 237-4775
FAX (337) 237-8605

Certificate of Analysis

Number: 2030-2006080262-001A

Dave Phillips
Hilcorp Energy Company
1320 Breaux Road
Lafayette LA 70506

August 23, 2006

Sample ID:		Sampled By:	DL	
Station Name :	Fuel Gas	Sample Of:	Gas	Spot
Station Number :		Sample Date:	08/21/2006	
Station Location :	Hog Bayou	Sample Conditions:	935.0 psig ,	@ 100.0°F
Sample Point:		PO / Ref. No:		

ANALYTICAL DATA

Components	Mol %	Wt %	GPM at 15.025 psia	Method	Lab Tech.	Date Analyzed
				GPA-2261 M		8/22/06 2:19
Nitrogen	0.197	0.301				
Carbon Dioxide	2.562	6.155				
Methane	91.810	80.400				
Ethane	3.108	5.102	0.847			
Propane	0.942	2.268	0.265			
Iso Butane	0.353	1.120	0.118			
n-Butane	0.241	0.765	0.077			
Iso Pentane	0.150	0.591	0.056			
n-Pentane	0.098	0.386	0.036			
Hexane	0.146	0.687	0.061			
Heptanes Plus	0.393	2.225	0.190			
	100.000	100.000	1.650			
	C2 +	C3 +	iC5 +			
GPM TOTAL :	1.650	0.803	0.343			

Relative Density	Real Gas	0.6340
Calculated Molecular Weight		18.32
Compressibility Factor		0.9974

Calculated Gross BTU per ft³ @15.025 psia & 60°F			Calculated Gross BTU per ft³ @ 14.730 psia & 60° F		
Real Gas	Dry Basis	1091	Real Gas	Dry Basis	1070
	Saturated Basis	1073		Saturated Basis	1051

Comments :

Cylinder Number 2672

Laboratory Manager

Quality Assurance: The above analyses are performed in accordance with ASTM, UOP or GPA guidelines for quality assurance, unless otherwise stated

HILCORP

SPL, Inc.

Analysis Request & Chain of Custody Record

SPL Work Order No.: 2006080262

SPL [illegible]

Page 1 of 1

Company: [illegible]

Address: 1320 Breaux Rd.

Lafayette, LA 70506

Contact: Dave Phillips

Phone/Fax: [illegible]

Field/Project:

Invoice to (company name):

Contact:

Phone/Fax:

Address:

Special Instructions: [illegible]

* Terms: Cylinders will be rented for $15/cyl. All cylinders checked out are to be returned within 21 days, whether they contain sample or not. Cylinders not returned after 30 days will be considered lost and will be billed at current replacement cost.

Requested TAT

- ☐ 24hr*
- ☐ 48hr*
- ☐ 72hr*
- ☒ Standard
- ☐ Other

* Surcharges May Apply

Sample ID	Sample Date	Sample Time	Sample Of	Duplica	Compo	Spot	Cylinder Tracking Info * Cylinder #	Date Out	Date In	GAS	Comments
[illegible]	[illegible]		GAS			✓	[illegible]			✓	
[illegible]	[illegible]		GAS			✓	[illegible]			✓	

Sampled By-Print Name: [illegible]

Signature: [illegible]

Company Name:

Relinquished By-Print Name: Date: Time:

Signature:

Received By-Print Name: Date: Time:

Signature:

Relinquished By-Print Name: Date: Time:

Signature:

Received By-Print Name: [illegible] Date: 8/21/06 Time: 1600

Signature: [illegible]

☐ 8880 Interchange Dr. Houston, TX 77054 (713) 660-0901

☐ 9221 Highway 23 Belle Chasse, LA 70037 (504) 391-1337

☐ P.O. Box 3079 Laurel, MS 39442 (601) 428-0842

☒ 500 Ambassador Caffery Pkwy. Scott, LA 70583 (337) 237-4775

☐ 1595 US 79 South Carthage, TX 75633 (903) 693-6242

☐ 459 Hughes Dr. Traverse City, MI 49686 (616) 947-5777

LDEQ-EDMS Document 35695808, Page 73 of 185

State of Louisiana

Department of Environmental Quality

KATHLEEN BABINEAUX BLANCO
GOVERNOR

MIKE D. McDANIEL, Ph.D.
SECRETARY

Certified Mail No. 7004 1350 0000 5459 5075

Agency Interest (AI) No. 18637
Activity No. PER20030001

Mr. Michael Schoch
Environmental Coordinator
Hilcorp Energy Company
PO Box 61229
Houston, TX 772081229

RE: Standard Oil and Gas Air Permit, Hog Bayou Field Facility, Hilcorp Energy Company, Grand Chenier, Cameron Parish, Louisiana

Dear Mr. Schoch:

This is to inform you that the permit modification for the above referenced facility has been approved under LAC 33:III.501. The submittal was approved on the basis of the emissions reported in the application dated February 12, 2003, submitted by ConocoPhillips Company, the resubmittal by Hilcorp dated January 26, 2004, and additional information received September 27, 2004; and the approval in no way guarantees the design scheme presented will be capable of controlling the emissions as to the types and quantities stated. A new application must be submitted if the permitted emissions are exceeded after operations begin. The synopsis and conditions are attached herewith.

It will be considered a violation of the permit if all proposed control measures and/or equipment are not installed and properly operated and maintained as specified in the application.

Operation of this facility is hereby authorized under the terms and conditions of this permit. This authorization shall expire at midnight on the 28th of January 2015, unless a timely and complete renewal application has been submitted six months prior to expiration. Terms and conditions of this permit shall remain in effect until such time as the permitting authority takes final action on the application for permit renewal. The permit number cited below and agency interest number cited above should be referenced in future correspondence regarding this facility.

Done this 28th day of January 2005.

Permit No.: 0560-00069-03

Sincerely,

Chuck Carr Brown, Ph.D.
Assistant Secretary

CCB:vth

Southwest Regional Office

AIR PERMIT BRIEFING SHEET
AIR PERMITS DIVISION
LOUISIANA DEPARTMENT OF ENVIRONMENTAL QUALITY

AI NO. 18637

I. STANDARD OIL AND GAS AIR PERMIT

This standard oil and gas permit authorizes construction, operation, and modification of crude oil and natural gas production facilities that meet the eligibility requirements outlined herein. Permit eligibility is limited to air emissions from oil and gas facilities for which the primary Standard Industrial Classification (SIC) Code is:

- 1311 - Crude Petroleum and Natural Gas

II. COVERAGE AND ELIGIBILITY

Facilities must maintain eligibility to operate under this standard permit. This permit does **not** authorize operations that are not compliant with the established eligibility conditions. Prior to initiating any modification to the facility that would prohibit it from being covered under this standard permit, the permittee must request an "individual" site-specific air permit. If a modification rendering the facility ineligible for this standard permit is effected without a site-specific permit in place, the modification would be deemed unauthorized from the date construction commenced and subject to enforcement action.

Conglomerations of contiguous oil and gas sites (groups of facilities under common control separated by 0.25 miles or less) may be covered provided that aggregate emissions from the facilities do not exceed the emissions thresholds listed in Section III; however, a separate application should be submitted for each facility.

Continuation of an Expired Standard Permit

If this permit is not reissued or replaced prior to the expiration date, it will be administratively continued and remain in force and effect. Any permittee who was granted permit coverage prior to the expiration date will automatically remain covered by the continued permit until the earlier of:

1. reissuance or replacement of this permit, at which time the permittee must comply with the conditions of the new permit to maintain authorization to operate; or
2. termination of the permit; or
3. issuance of a site-specific permit to the facility; or
4. a formal permit decision by the Department not to reissue this standard permit, at which time the permittee must seek coverage under a site-specific permit.

Requiring a Site-Specific Permit

Eligibility for this standard permit does not confer a vested right to coverage under the permit. The Department may require any person authorized by this permit to apply for and/or obtain a site-specific air permit. If the Department requires a permittee authorized to emit under this permit to apply for a site-specific air permit, the Department will notify the permittee in writing that a permit application is required. This notification will include a brief statement of the reasons for this decision, a statement setting a deadline for the permittee to file the application, and a statement that on the effective date of issuance or denial of the site-specific air permit, coverage under this standard permit will automatically

terminate. The Department may grant additional time to submit the application upon request of the applicant. If a permittee fails to submit in a timely manner a site-specific air permit application as required by the Department, then the applicability of this permit to the individual permittee will be automatically terminated at the end of the day specified by the Department for application submittal.

The Department's notification that coverage under a site-specific permit is required does not imply that the facility does not meet the eligibility requirements of this standard permit.

Severability

The provisions of this permit are severable and if any provision of this permit, or the application of any provision of this permit to any circumstance, is held invalid, the application of such provision to other circumstances and the remainder of this permit shall not be affected thereby.

Reopener Clause

This permit may be modified, revoked and reissued, or terminated for cause. If there is evidence indicating that the air emissions authorized by this permit cause or have the reasonable potential to cause or contribute to a violation of a NAAQS, the facility may be required to obtain a site-specific permit, or this standard permit may be modified to include different limitations and/or requirements.

III. FACILITIES EXCLUDED FROM COVERAGE

This standard permit does not authorize air emissions at:

1. **Major sources** as defined in LAC 33:III.502.

2. Facilities that emit or have the potential to emit criteria pollutants and/or toxic air pollutants (TAP) in amounts greater than or equal to those listed in the following table. Limits are given in tons per year (TPY).

Pollutant	Emissions
PM_{10}	25
SO_2	25
NO_X (attainment parishes)	95
CO	95
Total VOC (attainment parishes)	95
NO_X (nonattainment parishes)	23.75
Total VOC (nonattainment parishes)	23.75
Total TAPs (including, but not limited to the following)	20
benzene	8
ethylbenzene	8
toluene	8
xylene	8
n-hexane	8
formaldehyde	8
hydrogen sulfide	8

3. Facilities subject to any federal requirements contained in 40 CFR Parts 60, 61, 63, or 64, except that facilities subject to 40 CFR 61.145, National Emission Standard for Asbestos-Standard for demolition and renovation may be covered. See LAC 33:III.501.B.3.a.

4. Facilities subject to other regulatory requirements described in Section IV-Equipment Restrictions that exclude them from coverage under this standard permit.

5. Facilities that are or have operated as major sources of LAC 33:III.Chapter 51-regulated toxic air pollutants (TAP) on or after December 20, 1991, unless the site has been specifically released from reporting (in writing) by the Department.

6. Facilities subject to LAC 33:III.Chapter 59-Chemical Accident Prevention or 40 CFR Part 68-Chemical Accident Prevention Provisions.

7. Facilities that formerly operated as major sources if Best Available Control Technology (BACT) or Lowest Achievable Emission Rate (LAER) controls were installed and are being maintained on an existing point source.

8. Facilities located in Pointe Coupee Parish with equipment subject to LAC 33:III.2115.

9. Facilities with steam generating units (e.g., boilers) and/or turbines.

IV. EQUIPMENT RESTRICTIONS

Storage vessels eligible to be covered under this permit must **not** be subject to the following regulations:

- 40 CFR 60 Subpart K-Standards of Performance for Storage Vessels for Petroleum Liquids for Which Construction, Reconstruction, or Modification Commenced After June 11, 1973, and Prior to May 19, 1978;
- 40 CFR 60 Subpart Ka-Standards of Performance for Storage Vessels for Petroleum Liquids for Which Construction, Reconstruction, or Modification Commenced After May 18, 1978, and Prior to July 23, 1984;
- 40 CFR 60 Subpart Kb-Standards of Performance for Volatile Organic Liquid Storage Vessels (Including Petroleum Liquid Storage Vessels) for Which Construction, Reconstruction, or Modification Commenced After July 23, 1984; or
- LAC 33:III.2103.B.

Fugitive emissions eligible to be covered under this permit must **not** be subject to the following regulations:

- Subpart KKK-Standards of Performance for Equipment Leaks of VOC From Onshore Natural Gas Processing Plants;
- LAC 33:III.2121-Fugitive Emission Control; or
- LAC 33:III.2122-Fugitive Emission Control for Ozone Nonattainment Areas and Other Specified Areas.

AIR PERMIT BRIEFING SHEET
AIR PERMITS DIVISION
LOUISIANA DEPARTMENT OF ENVIRONMENTAL QUALITY

AI NO. 18637

Loading facilities eligible to be covered under this permit must **not**:

- employ a control device to restrict VOC emissions from marine loading for purposes of compliance with LAC 33:III.2108;
- load gasoline; or
- load compounds (other than crude or condensate) having a true vapor pressure at loading conditions of 1.5 psia or greater at a rate of 20,000 gallons per day or more (averaged over any 30-day period).

Natural gas sweetening units eligible to be covered under this permit must **not** be subject to the following regulation:

- 40 CFR 60 Subpart LLL-Standards of Performance for Onshore Natural Gas Processing: SO_2 Emissions.

V. MODIFICATIONS

Within seven (7) calendar days after effecting any modification to a facility authorized to operate under this standard oil and gas permit (generally commencement of construction), the permittee shall submit an updated Emission Point List, Emissions Inventory Questionnaire (EIQ), emissions calculations, and certification statement as described in LAC 33:III.517.B.1 to the Air Permits Division and to the regional office indicated on the signature page of this permit. The cover letter for this submittal should read "Updated SOGA Application", and include the Agency Interest No. and Activity No. found on the signature page of the issued permit.

VI. TERMINATION

Permittee shall notify the Air Permits Division by letter if operations at the facility permanently cease during the permit term.

VII. TYPE OF REVIEW

This application was reviewed for compliance with Louisiana Air Quality Regulations. New Source Performance Standards (NSPS), Prevention of Significant Deterioration (PSD), and National Emission Standards for Hazardous Air Pollutants (NESHAP) do not apply.

This facility is a minor source of LAC 33:III.Chapter 51-regulated toxic air pollutants (TAP).

VIII. PUBLIC NOTICE

Public notice is not required for permitting a minor source or for a modification to a minor source facility.

STANDARD OIL AND GAS PERMIT
GENERAL CONDITIONS

I. This permit is issued on the basis of the emissions reported in the application for approval of emissions and in no way guarantees that the design scheme presented will be capable of controlling the emissions to the type and quantities stated. Failure to install, properly operate and/or maintain all proposed control measures and/or equipment as specified in the application and supplemental information shall be considered a violation of the permit and LAC 33:III.501. If the emissions are determined to be greater than those allowed by the permit (e.g., during the shakedown period for new or modified equipment) or if proposed control measures and/or equipment are not installed or do not perform according to design efficiency, an application to modify the permit must be submitted. All terms and conditions of this permit shall remain in effect unless and until revised by the permitting authority.

II. The permittee is subject to all applicable provisions of the Louisiana Air Quality Regulations. The permittee must comply with all conditions of this permit. Violation of the terms and conditions of the permit constitutes a violation of these regulations and is grounds for enforcement action; permit termination; permit revocation and reissuance or modification; or for denial of a permit renewal application.

III. The permittee shall submit semiannual reports of progress outlining the status of construction, noting any design changes, modifications or alterations in the construction schedule which have or may have an effect on the emission rates or ambient air quality levels. These reports shall continue to be submitted until such time as construction is certified as being complete. Furthermore, for any significant change in the design, prior approval shall be obtained from the Office of Environmental Services, Air Permits Division.

IV. The permittee shall notify the Department of Environmental Quality, Office of Environmental Services, Air Permits Division within ten (10) calendar days from the date that construction is certified as complete and the estimated date of start-up of operation. The appropriate Regional Office shall also be so notified within the same time frame.

V. Any emissions testing performed shall be conducted in accordance with the methods described in this standard permit. Any deviation from or modification of the methods used for testing must have prior approval from the Office of Environmental Assessment, Environmental Technology Division.

VI. The emission testing described in paragraph V above shall be conducted within sixty (60) days after achieving normal production rate or after the end of the shakedown period, but in no event later than 180 days after initial start-up (or restart-up after modification). The Office of Environmental Assessment, Environmental Technology Division, shall be notified at least (30) days prior to testing and shall be given the opportunity to conduct a pretest meeting and observe the emission testing. The test results shall be submitted to the Environmental Technology Division within sixty (60) days after the complete testing. As required by LAC 33:III.913, the permittee shall provide necessary sampling ports in stacks or ducts and such other safe and proper sampling and testing facilities for proper determination of the emission limits.

VII. The permittee shall, within 180 days after start-up and shakedown of each project or unit, report to the Office of Environmental Compliance, Surveillance Division, any significant difference in operating emission rates as compared to those limitations specified in this standard permit. This report shall also include, but not be limited to, malfunctions and upsets. A permit modification shall be submitted, if necessary, as required in Condition I.

STANDARD OIL AND GAS PERMIT
GENERAL CONDITIONS

VIII. The permittee shall retain records of all information resulting from monitoring activities and information indicating operating parameters as specified in this standard permit for a minimum of at least five (5) years.

IX. Permittee shall submit prompt reports of all permit deviations as specified below to the Office of Environmental Compliance, Surveillance Division. All such reports shall be certified by a responsible official in accordance with LAC 33:III.517.B.1.

A. A written report shall be submitted within 7 days of any emission in excess of permit requirements by an amount greater than the Reportable Quantity established for that pollutant in LAC 33.I.Chapter 39.

B. A written report shall be submitted within 7 days of the initial occurrence of any emission in excess of permit requirements, regardless of the amount, where such emission occurs over a period of seven days or longer.

C. A written report shall be submitted quarterly to address all permit deviations not included in paragraphs A or B above. Unless required by an applicable reporting requirement, a written report is not required during periods in which there is no deviation. For previously reported permit deviations, in lieu of attaching the individual deviation reports, the quarterly report may clearly reference the communication(s)/correspondence(s) constituting the prior report, including the date the prior report was submitted. The schedule for submittal of quarterly reports shall be no later than the dates specified below for any permit deviations occurring during the corresponding specified calendar quarter:

1. Report by June 30 to cover January through March
2. Report by September 30 to cover April through June
3. Report by December 31 to cover July through September
4. Report by March 31 to cover October through December

D. Each report submitted in accordance with this condition disclosing emission limitation exceedances shall contain the following information:

1. Description of noncomplying emission(s);
2. Cause of noncompliance;
3. Anticipated time the noncompliance is expected to continue, or if corrected, the duration of the period of noncompliance;
4. Steps taken by the permittee to reduce and eliminate the noncomplying emissions; and
5. Steps taken by the permittee to prevent recurrences of the noncomplying emissions.

E. Any written report submitted in advance of the timeframes specified above, in accordance with an applicable regulation, may serve to meet the reporting requirements of this condition provided such reports are certified in accordance with LAC 33:III.517.B.1 and contain all information relevant to the permit deviation. Reporting under this condition does not relieve the permittee from the reporting requirements of any applicable regulation, including LAC 33.I.Chapter 39, LAC 33.III.Chapter 9, and LAC 33.III.5107.

STANDARD OIL AND GAS PERMIT
GENERAL CONDITIONS

X. Permittee shall allow the authorized officers and employees of the Department of Environmental Quality, at all reasonable times and upon presentation of identification, to:

A. Enter upon the permittee's premises where regulated facilities are located, regulated activities are conducted or where records required under this permit are kept;

B. Have access to and copy any records that are required to be kept under the terms and conditions of this permit, the Louisiana Air Quality Regulations, or the Act;

C. Inspect any facilities, equipment (including monitoring methods and an operation and maintenance inspection), or operations regulated under this permit; and

D. Sample or monitor, for the purpose of assuring compliance with this permit or as otherwise authorized by the Act or regulations adopted thereunder, any substances or parameters at any location.

XI. If samples are taken under Section X.D above, the officer or employee obtaining such samples shall give the owner, operator or agent in charge a receipt describing the sample obtained. If requested prior to leaving the premises, a portion of each sample equal in volume or weight to the portion retained shall be given to the owner, operator or agent in charge. If an analysis is made of such samples, a copy of the analysis shall be furnished promptly to the owner, operator or agency in charge.

XII. The permittee shall allow authorized officers and employees of the Department of Environmental Quality, upon presentation of identification, to enter upon the permittee's premises to investigate potential or alleged violations of the Act or the rules and regulations adopted thereunder. In such investigations, the permittee shall be notified at the time entrance is requested of the nature of the suspected violation. Inspections under this subsection shall be limited to the aspects of alleged violations. However, this shall not in any way preclude prosecution of all violations found.

XIII. The permittee shall comply with the reporting requirements specified under LAC 33:III.919 as well as notification requirements specified under LAC 33:III.927.

XIV. In the event of any change in ownership of the source described in this permit, the permittee and the succeeding owner shall notify the Office of Environmental Services, Air Permits Division, within ninety (90) days after the event, to amend this permit.

XV. Provisions of this permit may be appealed in writing pursuant to La. R.S. 30:2024(A) within 30 days from receipt of the permit. Only those provisions specifically appealed will be suspended by a request for hearing, unless the secretary or the assistant secretary elects to suspend other provisions as well. Construction cannot proceed except as specifically approved by the secretary or assistant secretary. A request for hearing must be sent to the following:

Attention: Office of the Secretary, Legal Services Division
La. Dept. of Environmental Quality
Post Office Box 4302
Baton Rouge, Louisiana 70821-4302

STANDARD OIL AND GAS PERMIT
GENERAL CONDITIONS

XVI. Laboratory procedures and analyses performed by commercial laboratories shall be conducted in accordance with the requirements set forth under the Laboratory Accreditation procedures established by LAC 33:I.Chapters 45-59. The Department will not accept data generated by commercial laboratories that are not accredited under this program, and retesting will be required by an accredited laboratory. Regulations on the Environmental Laboratory Accreditation Program and a list of labs that have applied for accreditation is available on the Department's website, www.deq.state.la.us/laboratory. Questions concerning the program may be directed to (225) 219-9800.

XVII. It shall not be a defense for a permittee in an enforcement action that it would have been necessary to halt or reduce the permitted activity in order to maintain compliance with the conditions of this permit.

XVIII. Pursuant to LAC 33:III.905, to aid in controlling the overall levels of air contaminants into the atmosphere, air pollution control facilities should be installed whenever practically, economically, and technologically feasible. When facilities have been installed on a property, they shall be used and diligently maintained in proper working order whenever any emissions are being made which can be controlled by the facilities, even though the ambient air quality standards in affected areas are not exceeded.

XIX. No person shall falsify, tamper with, or knowingly render inaccurate, any monitoring device or method required to be maintained under this permit.

XX. The permittee must take all reasonable steps to minimize or prevent any emissions in violation of this permit which have a reasonable likelihood of adversely affecting human health or the environment. The permittee shall also take all reasonable steps to minimize or correct any adverse impact on the environment resulting from noncompliance with the permit, including accelerated or additional monitoring as necessary to determine the nature and impact of the noncomplying emissions.

XXI. The permittee shall furnish to the Department, within a reasonable time to be specified by the Department, any information which the Department may request to determine whether cause exists for modifying, revoking and reissuing, or terminating this permit or to determine compliance with this standard permit. The permittee shall also furnish to the Department, upon request, copies of records required to be kept by this permit.

XXII. Nothing in this permit will be construed to preclude the institution of any legal action or relieve the permittee from any responsibilities, liabilities, or penalties established pursuant to any applicable federal or state law or regulation. No condition of this permit shall release the permittee from any responsibility or requirements under other environmental statutes or regulations.

General Information Sheet

Agency Interest/Facility Name: Hog Bayou Field Facility

Agency Interest/Facility ID: 18637

Permit Id: 0560-00069-03

Also Known As:

ID	Name	By/For	Dates
73-0400345	Phillips Petroleum Co - Hog Bayou Field	Federal Tax ID	11/21/1999
5722	Phillips Petro Co - Hog Bayou Field	Water Permitting	11/21/1999
LAG330024	LPDES #	LPDES Permit #	12/12/2004
0560-00069	Hog Bayou Field Facility	CDS Number	03/12/2001
	Hilcorp Energy Co	Air Permitting	07/15/2003
	Phillips Petroleum Co	Air Permitting	05/27/1993 - 01/01/2003
	ConocoPhillips Co	Air Permitting	01/01/2003 - 07/15/2003
WP2491	WPC File Number	LWDPS Permit #	05/22/2003
0560-0069	Hog Bayou Field Facility	Emission Inventory	03/03/2004

Physical Location: Hog Bayou Field
Grand Chenier, LA

Main Phone: (713)209-2400

Main FAX: (713)209-2401

Mailing Address: PO Box 61229
Houston, TX 77208-1229

Location of Front Gate: 29° 43' 31" 6 hundredths latitude, 92° 59' 23" 9 hundredths longitude

Related People:

Name	Phone	Phone Type	Relationship
James Buzan	(318)261-4142	Work phone number	Accident Prevention Billing Party for
James Buzan	(318)261-4142	Work phone number	Accident Prevention Contact for
Michael Schoch	(713)289-2756	Work fax number	Air Permit Contact For
Michael Schoch	(713)312-1838	Digital pager	Air Permit Contact For
Michael Schoch	(713)209-2400	Work phone number	Air Permit Contact For
Michael Schoch	(713)209-2400	Work phone number	Responsible Official for
Michael Schoch	(713)312-1838	Digital pager	Responsible Official for
Michael Schoch	(713)289-2756	Work fax number	Responsible Official for

Related Organizations:

Name	Phone	Phone Type	Relationship
Hilcorp Energy Co	(713)289-2756	Work fax number	Air Billing Party for
	(713)209-2400	Work phone number	Air Billing Party for
	(713)209-2400	Work phone number	Operates
	(713)289-2756	Work fax number	Operates
	(713)289-2756	Work fax number	Owns
	(713)209-2400	Work phone number	Owns

SIC Codes: 1311, Crude petroleum and natural gas

Facility Specific Requirements

Hog Bayou Field Facility

Agency Interest Number: 18637

Activity ID No.: PER20030001

Permit Id : 0560-00069-03

Limitations:

Subject Item ID	Limit [Citation]	Stat. Basis	Phases	Which Months?
AI18637	Benzene < 8 tons/yr. [LAC 33:III.501.C.6]	Annual maximum	<All>	All Year
	Carbon monoxide < 95 tons/yr. [LAC 33:III.501.C.6]	Annual maximum	<All>	All Year
	Ethyl benzene < 8 tons/yr. [LAC 33:III.501.C.6]	Annual maximum	<All>	All Year
	Formaldehyde < 8 tons/yr. [LAC 33:III.501.C.6]	Annual maximum	<All>	All Year
	Hydrogen sulfide < 8 tons/yr. [LAC 33:III.501.C.6]	Annual maximum	<All>	All Year
	Attainment parishes: Nitrogen oxides < 95 tons/yr. [LAC 33:III.501.C.6]	Annual maximum	<All>	All Year
	Nonattainment parishes: Nitrogen oxides < 23.75 tons/yr. [LAC 33:III.501.C.6]	Annual maximum	<All>	All Year
	Particulate matter (10 microns or less) < 25 tons/yr. [LAC 33:III.501.C.6]	Annual maximum	<All>	All Year
	Sulfur dioxide < 25 tons/yr. [LAC 33:III.501.C.6]	Annual maximum	<All>	All Year
	Toluene < 8 tons/yr. [LAC 33:III.501.C.6]	Annual maximum	<All>	All Year
	Toxic air pollutants (TAP) < 20 tons/yr. [LAC 33:III.501.C.6]	Annual maximum	<All>	All Year
	Attainment parishes: VOC, Total < 95 tons/yr. [LAC 33:III.501.C.6]	Annual maximum	<All>	All Year
	Nonattainment parishes: VOC, Total < 23.75 tons/yr. [LAC 33:III.501.C.6]	Annual maximum	<All>	All Year
	Xylene (mixed isomers) < 8 tons/yr. [LAC 33:III.501.C.6]	Annual maximum	<All>	All Year
	n-Hexane < 8 tons/yr. [LAC 33:III.501.C.6]	Annual maximum	<All>	All Year

Narrative (Date and Textual) Requirements:

AI18637 --

1. Facility-wide: Failure to pay the prescribed annual fee as provided herein, within 90 days after the due date, will constitute a violation of these regulations and shall subject the person to applicable enforcement actions under the Louisiana Environmental Quality Act including, but not limited to, revocation or suspension of the applicable permit. [LAC 33:III.219]
2. Facility-wide (meeting applicability requirements in LAC 33:III.919.A.1): Submit Emission Inventory by March 31st of each year for the period January 1 to December 31 of the previous year. Submit emission inventory data in the format specified by the Office of Environmental Assessment, Environmental Evaluation Division. Include all data applicable to the emissions source(s) as specified in LAC 33:III.919.A-D. [LAC 33:III.919.D]
3. Facility-wide: Emissions of smoke which pass onto or across a public road and create a traffic hazard by impairment of visibility as defined in LAC 33:III.111 or intensify an existing traffic hazard condition are prohibited. [LAC 33:III.1103]
4. Facility-wide: Outdoor burning of waste material or other combustible material is prohibited. [LAC 33:III.1109.B]
5. Facility-wide: Emissions of particulate matter which pass onto or across a public road and create a traffic hazard by impairment of visibility or intensify an existing traffic hazard condition are prohibited. [LAC 33:III.1303.B]

Facility Specific Requirements

Hog Bayou Field Facility

Agency Interest Number: 18637

Activity ID No.: PER20030001

Permit Id : 0560-00069-03

Narrative (Date and Textual) Requirements:

AI18637 --

6. Facility-wide: Prevent particulate matter from becoming airborne by taking all reasonable precautions. These precautions shall include, but not be limited to, those specified in LAC 33:III.1305.1-7. [LAC 33:III.1305]

7. Facility-wide: Maintain records to verify exemption from LAC 33:III.1503. Include total calculated sulfur dioxide emissions from the entire facility. Keep records on site and available for inspection. An alternate site to store records may be used with prior approval. [LAC 33:III.1513]

8. Facility-wide: Discharges of odorous substances at or beyond property lines which cause a perceived odor intensity of six or greater on the specified eight point butanol scale as determined by Method 41 of LAC 33:III.2901.G are prohibited. [LAC 33:III.2901.D]

9. Facility-wide: If requested to monitor for odor intensity, take and transport samples in a manner which minimizes alteration of the samples either by contamination or loss of material. Evaluate all samples as soon after collection as possible in accordance with the procedures set forth in LAC 33:III.2901.G. [LAC 33:III.2901.F]

10. Facility-wide: Submit standby plan for the reduction or elimination of emissions during an Air Pollution Alert, Air Pollution Warning, or Air Pollution Emergency: Due within 30 days after requested by DEQ. [LAC 33:III.5611.A]

11. Facility-wide: During an Air Pollution Alert, Air Pollution Warning or Air Pollution Emergency, make the standby plan available on the premises to any person authorized by DEQ to enforce these regulations. [LAC 33:III.5611.B]

12. Flares: Control emissions of smoke from a flare so that the shade or appearance of the emission does not exceed 20 percent opacity, except for a combined total of six hours in any 10 consecutive day period, for burning in connection with pressure valve releases for control over process upsets. [LAC 33:III.1105]

13. Flares: Submit notification to the Office of Environmental Compliance as soon as possible after the start of burning of pressure valve releases for control over process upsets if it appears the emergency cannot be controlled in six hours. Notify in accordance with LAC 33:I.3923. [LAC 33:III.1105]

14. Flares (requesting exemption from LAC 33:III.1105): Submit report in writing to the Office of Environmental Compliance, Surveillance Division, within seven calendar days after startup or shutdown, if flaring was not the result of failure to maintain or repair equipment. Submit report if requesting exemption from the provisions of LAC 33:III.1105. Explain the conditions and duration of the startup or shutdown and list the steps necessary to remedy, prevent and limit the excess emissions. Minimize flaring and ensure that no ambient air quality standards are jeopardized. [LAC 33:III.1107]

15. Flares (option 1 of 2): Ensure destruction of emissions to the flare stack by maintaining the heat content of the flare gas above 300 BTU/scf and by installing, maintaining, and operating according to manufacturer's specifications a heat sensing device to detect the continuous presence of a flame. Alternate devices may be used with the prior approval. To insure the heat content of the flare gas is above 300 BTU/scf, perform an annual gas analysis. Keep these records on site and available for inspection. An alternate site to store records may be used with prior approval. [LAC 33:III.501.C.6]

16. Flares (option 2 of 2): Ensure destruction of emissions to the flare stack by maintaining the heat content of the flare gas above 300 BTU/scf. Ensure the continuous presence of a flame by documenting daily visual observation of the continuous presence of a flame. To insure the heat content of the flare gas is above 300 BTU/scf, perform an annual gas analysis. Keep these records on site and available for inspection. An alternate site to store records may be used with prior approval. Develop a corrective action plan for re-lighting the flare, and keep readily available for immediate implementation in the event the flare needs to be relit. **Note compliance with this option is mandatory for a flare serving as the control device for a glycol dehydrator subject to LAC 33:III.2116 (LAC 33:III.2116.B.3)**[4]. [LAC 33:III.501.C.6]

17. Flash gas emissions (requiring control pursuant to LAC 33:III.2104): Install a vapor recovery system that directs vapors to a fuel gas system, a sales gas system, an underground gas injection system, or a control device. [LAC 33:III.2104.C]

18. Flash gas emissions (requiring control pursuant to LAC 33:III.2104 - potential to emit >= 250 tpy): Reduce aggregated facility flash gas emissions by a minimum of 95 percent. [LAC 33:III.2104.C]

19. Flash gas emissions (requiring control pursuant to LAC 33:III.2104 - potential to emit < 250 tpy - nonattainment parishes): Reduce aggregated facility flash gas emissions by a minimum of 95 percent or, by means of a federally enforceable permit revision, to a potential to emit of less than 25 tpy. [LAC 33:III.2104.C]

Facility Specific Requirements

Hog Bayou Field Facility

Agency Interest Number: 18637

Activity ID No.: PER20030001

Permit Id : 0560-00069-03

Narrative (Date and Textual) Requirements:

AI18637 --

34. Glycol dehydration units: Keep records of the results of any testing conducted in accordance with LAC 33:III.2116.D, and keep records of the date of any maintenance and repair of the required control device and the duration of uncontrolled emissions during such activities. [LAC 33:III.2116.F]

35. Glycol dehydration units (using a condenser to control emissions): Maintain a record of the final exhaust temperature and time observed recorded twice a week on different days during daylight hours; and maintain a record of all temperature exceedances greater than or equal to 120 degrees F, the date of each temperature exceedance, and a brief explanation describing the circumstances of the temperature exceedance. [LAC 33:III.2116.F.3]

36. Glycol dehydration units (requesting exemption from LAC 33:III.2116): Keep records of total hours of operation on an annual basis if claiming an exemption from LAC 33:III.2116 under LAC 33:III.2116.C.1; OR keep records of the actual throughput per day and the glycol circulation rate if claiming an exemption from LAC 33:III.2116 under LAC 33:III.2116.C.2. [LAC 33:III.2116.F.4]

37. Internal combustion engines: Stack testing requirements apply to internal combustion engines that have a maximum rated horsepower of 500hp or more and operate over 720 hours in a semiannual period. Keep records of stack testing on site and available for inspection. An alternate site to store records may be used with prior approval. [LAC 33:III.501.C.6]

38. Internal combustion engines: Submit notification at least 30 days prior to performance/emissions test to the Office of Environmental Assessment, Environmental Technology Division, Engineering Services, to provide the opportunity to conduct a pretest meeting and observe the emission testing. [LAC 33:III.501.C.6]

39. Internal combustion engines: Conduct a performance/emissions test within 180 days after initial startup (or restart-up after modification), or within 60 days after achieving normal production rate or end of the shakedown period, whichever is earliest. Repeat the test after each major engine overhaul. Test methods and procedures shall be in accordance with New Source Performance Standards, 40 CFR 60, Appendix A, Method 7E - Determination of Nitrogen Oxides Emissions from Stationary Sources and Method 10 - Determination of Carbon Monoxide Emissions from Stationary Sources. Use alternate stack test methods only with the prior approval of the Office of Environmental Assessment, Environmental Technology Division, Engineering Services. As required by LAC 33:III.913, provide necessary sampling ports in stacks or ducts and such other safe and proper sampling and testing facilities for proper determination of the emission limits. [LAC 33:III.501.C.6]

40. Internal combustion engines: Submit report within 60 days after performance/emissions test. Submit emissions test results to the Office of Environmental Assessment, Environmental Technology Division, Engineering Services. [LAC 33:III.501.C.6]

41. Internal combustion engines (no catalytic converter - option 1 of 4): Monitor and record stack gas concentrations of nitrogen oxides, carbon monoxide and oxygen with a portable analyzer six months after the stack test or previous semiannual test, plus or minus 30 days. Maintain monitored parameters in the same range as during the initial stack test. Calibrate portable analyzers before each test using a known reference gas sample. [LAC 33:III.501.C.6]

42. Internal combustion engines (no catalytic converter - option 2 of 4 - natural gas fired engines only): Monitor and record intake manifold temperature and pressure, fuel header pressure, engine speed, and spark ignition timing daily at manned stations, otherwise weekly. Maintain monitored parameters in the same range as during the initial stack test. [LAC 33:III.501.C.6]

43. Internal combustion engines (no catalytic converter - option 3 of 4 - diesel or dual-fired engines only): Monitor and record intake manifold temperature and pressure, fuel header pressure, diesel rack position (fuel flow), and injector timing daily at manned stations, otherwise weekly. Maintain monitored parameters in the same range as during the initial stack test. [LAC 33:III.501.C.6]

Facility Specific Requirements

Hog Bayou Field Facility

Agency Interest Number: 18637

Activity ID No.: PER20030001

Permit Id : 0560-00069-03

Narrative (Date and Textual) Requirements:

AI18637 --

44. Internal combustion engines (no catalytic converter - option 4 of 4, part 1 - natural gas fired engines only): Perform semiannual preventive maintenance analysis and necessary adjustment to maintain compressor/engine performance and emissions in the same range as the initial stack test. Include in this analysis a complete compressor/engine unit performance testing for the natural gas fired internal combustion engine. Include in periodic engine analysis the following: 1) Setup, calibrate, and synchronize the performance analysis equipment per manufacturer's specification. Submit a procedural write up to LDEQ and keep on site. 2) Perform a power cylinder performance analysis with checks for combustion stability, peak pressure angle, detection of misfires, detonation, and pre-ignition. 3) Perform a primary and secondary ignition analysis including checking the ignition timing on each spark plug. 4) Perform a vibration analysis for the detection of mechanical problems such as worn leaking piston rings, piston/cylinder wear, fuel injection problems, etc. 5) Perform a compressor end analysis for detection of leaking valves or rings, or unnecessary recirculation of gas. 6) Check and record the IHP (indicated horsepower) on each end of each compressor cylinder. Determine the compressor load. Observe the PT (pressure vs. time) pattern, the PV (pressure vs. volume) pattern, and vibration traces on the analyzer oscilloscope. Take pictures of these traces for each cylinder. 7) Check and record the BMEP (brake mean effective pressure) on all power cylinders and check all hydraulic lifter adjustments. 8) Balance the load on all power cylinders by indicated horsepower. 9) Reread the IHP on each power cylinder and take pictures of the traces of each cylinder (e.g., PT, PV, and vibration). [LAC 33:III.501.C.6]

45. Internal combustion engines (no catalytic converter - option 4 of 4, part 2 - natural gas fired engines only): Record a complete performance and condition analysis, adjustments made, and list for future repairs and/or maintenance work, including scheduled date, six months after the stack test or previous semiannual test, plus or minus 30 days. [LAC 33:III.501.C.6]

46. Internal combustion engines (with catalytic converter): Monitor and record stack gas concentrations of nitrogen oxides, carbon monoxide and oxygen with a portable analyzer twelve months after the stack test or previous annual test, plus or minus 30 days. Maintain monitored parameters in the same range as during the initial stack test. Calibrate portable analyzers before each test using a known reference gas sample. [LAC 33:III.501.C.6]

47. Loading facilities: Keep records to prove exemption from LAC 33:III.2107, including a daily record of the total throughput of VOC (excluding crude and condensate) loaded at the facility. Maintain records for at least five years. [LAC 33:III.2107]

48. Loading facilities (marine loading): Keep records to prove the non-applicability of LAC 33:III.2108. Maintain records for at least five years. [LAC 33:III.2108]

49. Natural gas sweetening units: Maintain records to verify non-applicability of 40 CFR 60 Subpart LLL. Keep records on site and available for inspection. An alternate site to store records may be used with prior approval. [LAC 33:III.501.C.6]

50. Storage vessels (storage capacity of >250 gallons and <=40,000 gallons used to store any volatile organic compound after lease custody transfer with a maximum true vapor pressure of 1.5 psia or greater at storage conditions): Equip with a submerged fill pipe or a vapor loss control system consisting of a gathering system capable of collecting the volatile organic compound vapors and a vapor disposal system capable of processing such organic vapors that reduces inlet emissions of total volatile organic compounds by 95 percent or greater. If the vapor loss control system was installed on or before December 31, 1992, then inlet emissions of total volatile organic compounds must be reduced by 90 percent or greater. [LAC 33:III.2103.A]

51. Storage vessels: Maintain records to verify compliance with or exemption from LAC 33:III.2103. Maintain records for at least five years. [LAC 33:III.2103.I]

52. Storage vessels: Maintain records to verify non-applicability of 40 CFR 60 Subpart K, Ka and Kb. Keep records on site and available for inspection. An alternate site to store records may be used with prior approval. [LAC 33:III.501.C.6]

External Combustion Burner Sources: Heater Treaters, Line Heaters, Reboiler Firebox, etc.

Description:	Glycol Reboiler Burner

Source ID:	06

Date:	1/5/2005

Burner Data	
Manufacturer	na
Serial Number	na
Model Number	na
Burner Rating (mmbtu/hr)	1.2
Burner Utilized (mmbtu/hr)	1.2
Thermal Efficiency (%)	95
Average Firing Rate (%)	100
Excess Air (%)	10

Location of stack or vent		
UTM Zone	15	
Horizontal	500.725	mE
Vertical	3287.581	mN

Identification	
EID	
EPN	
FIN	
CIN	

Control Efficiency		
Control		
NOx	0	%
CO	0	%
VOC	0	%

Action:	Change

Fuel Data	
Burner Size (mbtu/hr)	1200
Fuel Heat of Combustion (btu/scf)	1100
Fuel Type	Natural Gas
Fuel Consumption (scf/hr)	1090.9
Fuel Consumption (mcfd)	26.2
AP-42 btu Adjusted Fuel (scf/hr)	1176.47

Stack and Discharge Physical Characteristics		
Height above grade	56	feet
Diameter at discharge	0.8	feet
Area of stack	0.54	ft ^2
Stack exit temperature	515	deg F

Operating Characteristics		
Normal Operating Time	8760	
hours/day	24	
days/week	7	
weeks/year	52	52.145

Facility Data	
Operator	Hilcorp Energy Company
Field Name	Hogg Bayou Facility
Site Name	

Emission Factors Utilized		
Pollutant	Factor	Units
PM	7.6	lb/mmscf
SOx	0.6	lb/mmscf
NOx	100	lb/mmscf
CO	84	lb/mmscf
VOC	5.5	lb/mmscf
Methane	2.3	lb/mmscf

AP-42 and GRID-HAPCalc Air Emission Computation Factors								
Equipment	units	PM	SOx	NOx	CO	VOC	Methane	Reference
Commercial (.3 to 10)	lb/mmscf	7.6	0.6	100	84	5.5	2.3	AP-42 Table 1.4-1, -2
Residential Boiler (<.3)	lb/mmscf	7.6	0.6	94	40	11	2.3	AP-42 Table 1.4-1, -2
			AP-42 Factors @ 1020 btu/scf Fuel Gas					

Annual Process Rate =	10.31	mmscf/yr
Percentage of Maximum Emissions Potential =	100	%

Emission Calculation Sheet

Emission Factors		
Pollutant	Factor	Unit
NOx	100	lb/mm scf
CO	84	lb/mm scf
VOC	5.5	lb/mm scf
PM	7.6	lb/mm scf
SO2	0.6	lb/mm scf
Methane	2.3	lb/mm scf

Fuel Gas Basis of Heating Value for Firing Capacity (LHV/HHV)			
LHV =	927	HHV =	

Exhaust Stack Flow Calculations

Stack Exhaust Flow = (scf/hr)(10.53 flue gas/fuel gas)(T + 460/520)(1hr/60 min) = 98768.45 acfm

Stack Velocity = (Exhaust Flow)(Area)(60 sec) = $\frac{98768.45}{0.54} \cdot \frac{\text{min}}{60}$ = 3023.37046 ft/sec

Emission Rate Calculations

lb/hr = $\frac{\text{lb/mmscf} \cdot \text{scf/hr}}{1000000}$ tons/year = $\frac{\text{lb/hr} \cdot \text{operating hrs}}{2000}$

NOx =	$\frac{100 \cdot 1176.47}{1000000}$	=	0.118 lb/hr	=	0.515 tpy
CO =	$\frac{84 \cdot 1176.47}{1000000}$	=	0.099 lb/hr	=	0.433 tpy
VOC =	$\frac{5.5 \cdot 1176.47}{1000000}$	=	0.006 lb/hr	=	0.028 tpy
SO2 =	$\frac{0.6 \cdot 1176.47}{1000000}$	=	0.001 lb/hr	=	0.003 tpy
PM	$\frac{7.6 \cdot 1176.47}{1000000}$	=	0.009 lb/hr	=	0.039 tpy
Methane	$\frac{2.3 \cdot 1176.47}{1000000}$	=	0.003 lb/hr	=	0.012 tpy

VOC Emission Speciation				
Pollutant	Weight %	lb/hr	tpy	Speciation
Methane	56	0.004	0.016	AP-42 Profile
Propane	4	0.000	0.001	AP-42 Profile
n-Butane	9	0.001	0.003	AP-42 Profile
I-Pentane	9	0.001	0.003	AP-42 Profile
n-Pentane	6	0.000	0.002	AP-42 Profile
I-Hexane	1	0.000	0.000	AP-42 Profile
Cyclohaxane	1	0.000	0.000	AP-42 Profile
Formaldhyd.	8	0.001	0.002	AP-42 Profile
Benzene	4	0.000	0.001	AP-42 Profile
Toluene	2	0.000	0.001	AP-42 Profile
Total	100.000	0.006	0.028	

Tank Emissions

Description:	Oil Storage Tank

Source ID:	08

Date:	1/5/2005

Tank Data	
Manufacturer	Unknown
Volume (bbls)	300
Volume (gallons)	12600
Height (feet)	
Diameter (feet)	
Color	Gray
Vent	common
Controls	None

Location of stack or vent		
UTM Zone	15	
Horizontal	500.725	kmE
Vertical	3287.581	kmN

Identification	
EID	
EPN	
FIN	
CIN	

Control Efficiency		
Control		
NOx	0	%
CO	0	%
VOC	0	%

Action:	Change

Product Data	
True Vapor Pressure (psi)	3.40
Reid Vapor Pressure (psi)	5
Gravity (API)	40
Quantity (bbls/day)	400.0
Quantity (bbls/year)	146000.0
Vapor Molecular Weight (lb/lb mole)	50

Stack and Discharge Physical Characteristics		
Height above grade	36	feet
Diameter at discharge	0.3	inches
Area of stack	0.0003	ft ^2
Stack exit temperature	78	deg F

Operating Characteristics		
Normal Operating Time	8760	
hours/day	24	
days/week	7	
weeks/year	52	52.145

Facility Data	
Operator	Hilcorp Energy Company
Field Name	Hogg Bayou
Site Name	

Total VOC Working and Standing Emissions from Tanks Program:	0.579	lb/hr
Total VOC Flash Emissions from Vazquez-Beggs Correlation Program:	8.2	lb/hr

Total Tank Unspeciated VOC Emissions: 8.779 lb/hr

Tank Size and Dimensions		
Volume	Height	Diameter
100		
210	20	10
400	20	12
500		
1000	24	17
1500		
10000		

Common Liquid Properties			
	TVP	RVP	VMW
Crude Oil	3.4	5	50
Saltwater	0.35		20.51

Annual Process Rate =	146000.00	bbl/year

Tank VOC Emission Speciation Calculation Worksheet

Compound	Weight %	Weight of Gas (lb/hr)	Speciated lb/hr	Speciated tons/year
NITROGEN		8.779	0	0
CARBON DIOXIDE		8.779	0	0
HYDROGEN SULFIDE		8.779	0	0
METHANE		8.779	0	0
ETHANE	0.0928	8.779	0.814691	3.568494
PROPANE	0.2584	8.779	2.268494	9.93641
I-BUTANE	0.0714	8.779	0.626821	2.745587
N-BUTANE	0.2003	8.779	1.758434	7.702256
2 METHYL PENTANE	0.018	8.779	0.158022	0.692165
N-PENTANE	0.073	8.779	0.640867	2.807113
3 METHYL PENTANE	0.0103	8.779	0.090424	0.396072
HEXANE	0.022	8.779	0.193138	0.845979
BENZENE	0.0012	8.779	0.010535	0.046144
CYCLOHEXANE	0.0009	8.779	0.007901	0.034608
HEPTANE	0.0112	8.779	0.098325	0.43068
2,2,4-TMC5	0.0056	8.779	0.049162	0.21534
CYCLOPENTANE	0.0051	8.779	0.044773	0.196113
TOLUENE	0.0023	8.779	0.020192	0.088443
2 ME PROPANE	0.0714	8.779	0.626821	2.745587
OCTANES	0.007	8.779	0.061453	0.269175
ETHYL BENZENE	0.0009	8.779	0.007901	0.034608
XYLENE	0.0057	8.779	0.05004	0.219186
2 ME BUTANE	0.0629	8.779	0.552199	2.418731
OTHER	0.1501	8.779	1.317728	5.771885

TOTALS:	1.0705

* Emission Speciation based on EPA AP-42 Profile No. 1208 (for crude oil gathering tanks)

Total Methane Emissions	0	lb/hr	0	tpy
Total Ethane Emissions	0.8146912	lb/hr	3.568494	tpy
Total NM/NE Emissions	8.5832283	lb/hr	37.59608	tpy

Tank Emissions

Description:	Oil Storage Tank

Source ID:	09

Date:	1/5/2005

Tank Data	
Manufacturer	Unknown
Volume (bbls)	300
Volume (gallons)	12600
Height (feet)	
Diameter (feet)	
Color	Gray
Vent	common
Controls	None

Location of stack or vent		
UTM Zone	15	
Horizontal	500.725	kmE
Vertical	3287.581	kmN

Identification	
EID	
EPN	
FIN	
CIN	

Control Efficiency		
Control		
NOx	0	%
CO	0	%
VOC	0	%

Action:	Change

Product Data	
True Vapor Pressure (psi)	3.40
Reid Vapor Pressure (psi)	5
Gravity (API)	40
Quantity (bbls/day)	400.0
Quantity (bbls/year)	146000.0
Vapor Molecular Weight (lb/lb mole)	50

Stack and Discharge Physical Characteristics		
Height above grade	36	feet
Diameter at discharge	0.3	inches
Area of stack	0.0003	ft ^2
Stack exit temperature	78	deg F

Operating Characteristics		
Normal Operating Time	8760	
hours/day	24	
days/week	7	
weeks/year	52	52.145

Facility Data	
Operator	Hilcorp Energy Company
Field Name	Hogg Bayou
Site Name	

Total VOC Working and Standing Emissions from Tanks Program:	0.579	lb/hr
Total VOC Flash Emissions from Vazquez-Beggs Correlation Program:	8.2	lb/hr

Total Tank Unspeciated VOC Emissions:	8.779	lb/hr

Tank Size and Dimensions		
Volume	Height	Diameter
100		
210	20	10
400	20	12
500		
1000	24	17
1500		
10000		

Common Liquid Properties			
	TVP	RVP	VMW
Crude Oil	3.4	5	50
Saltwater	0.35		20.51

Annual Process Rate =	146000.00	bbl/year

Tank VOC Emission Speciation Calculation Worksheet

Compound	Weight %	Weight of Gas (lb/hr)	Speciated lb/hr	Speciated tons/year
NITROGEN		8.779	0	0
CARBON DIOXIDE		8.779	0	0
HYDROGEN SULFIDE		8.779	0	0
METHANE		8.779	0	0
ETHANE	0.0928	8.779	0.814691	3.568494
PROPANE	0.2584	8.779	2.268494	9.93641
I-BUTANE	0.0714	8.779	0.626821	2.745587
N-BUTANE	0.2003	8.779	1.758434	7.702256
2 METHYL PENTANE	0.018	8.779	0.158022	0.692165
N-PENTANE	0.073	8.779	0.640867	2.807113
3 METHYL PENTANE	0.0103	8.779	0.090424	0.396072
HEXANE	0.022	8.779	0.193138	0.845979
BENZENE	0.0012	8.779	0.010535	0.046144
CYCLOHEXANE	0.0009	8.779	0.007901	0.034608
HEPTANE	0.0112	8.779	0.098325	0.43068
2,2,4-TMC5	0.0056	8.779	0.049162	0.21534
CYCLOPENTANE	0.0051	8.779	0.044773	0.196113
TOLUENE	0.0023	8.779	0.020192	0.088443
2 ME PROPANE	0.0714	8.779	0.626821	2.745587
OCTANES	0.007	8.779	0.061453	0.269175
ETHYL BENZENE	0.0009	8.779	0.007901	0.034608
XYLENE	0.0057	8.779	0.05004	0.219186
2 ME BUTANE	0.0629	8.779	0.552199	2.418731
OTHER	0.1501	8.779	1.317728	5.771885

TOTALS:	1.0705

* Emission Speciation based on EPA AP-42 Profile No. 1208 (for crude oil gathering tanks)

Total Methane Emissions	0	lb/hr	0	tpy
Total Ethane Emissions	0.8146912	lb/hr	3.568494	tpy
Total NM/NE Emissions	8.5832283	lb/hr	37.59608	tpy

Tank Emissions

Description:	Saltwater Storage Tank

Source ID:	20

Date:	1/5/2005

Tank Data	
Manufacturer	Unknown
Volume (bbls)	1500
Volume (gallons)	63000
Height (feet)	
Diameter (feet)	
Color	Gray
Vent	common
Controls	None

Location of stack or vent		
UTM Zone	15	
Horizontal	500.725	kmE
Vertical	3287.581	kmN

Identification	
EID	
EPN	
FIN	
CIN	

Control Efficiency		
Control		
NOx	0	%
CO	0	%
VOC	0	%

Action:	Change

Product Data	
True Vapor Pressure (psi)	0.35
Reid Vapor Pressure (psi)	5
Gravity (API)	40
Quantity (bbls/day)	4.0
Quantity (bbls/year)	1460.0
Vapor Molecular Weight (lb/lb mole)	50

Stack and Discharge Physical Characteristics		
Height above grade	36	feet
Diameter at discharge	0.3	inches
Area of stack	0.0003	ft ^2
Stack exit temperature	78	deg F

Operating Characteristics		
Normal Operating Time	8760	
hours/day	24	
days/week	7	
weeks/year	52	52.145

Facility Data	
Operator	Hilcorp Energy Company
Field Name	Hogg Bayou
Site Name	

Total VOC Working and Standing Emissions from Tanks Program:	0.00579	lb/hr	1% of oil thruput
Total VOC Flash Emissions from Vazquez-Beggs Correlation Program:	0.082	lb/hr	1% of oil thruput

Total Tank Unspeciated VOC Emissions: 0.08779 lb/hr

Tank Size and Dimensions		
Volume	Height	Diameter
100		
210	20	10
400	20	12
500		
1000	24	17
1500		
10000		

Common Liquid Properties			
	TVP	RVP	VMW
Crude Oil	3.4	5	50
Saltwater	0.35		20.51

Annual Process Rate =	1460.00	bbl/year

Tank VOC Emission Speciation Calculation Worksheet

Compound	Weight %	Weight of Gas (lb/hr)	Speciated lb/hr	Speciated tons/year
NITROGEN		0.08779	0	0
CARBON DIOXIDE		0.08779	0	0
HYDROGEN SULFIDE		0.08779	0	0
METHANE		0.08779	0	0
ETHANE	0.0928	0.08779	0.008147	0.035685
PROPANE	0.2584	0.08779	0.022685	0.099364
I-BUTANE	0.0714	0.08779	0.006268	0.027456
N-BUTANE	0.2003	0.08779	0.017584	0.077023
2 METHYL PENTANE	0.018	0.08779	0.00158	0.006922
N-PENTANE	0.073	0.08779	0.006409	0.028071
3 METHYL PENTANE	0.0103	0.08779	0.000904	0.003961
HEXANE	0.022	0.08779	0.001931	0.00846
BENZENE	0.0012	0.08779	0.000105	0.000461
CYCLOHEXANE	0.0009	0.08779	7.9E-05	0.000346
HEPTANE	0.0112	0.08779	0.000983	0.004307
2,2,4-TMC5	0.0056	0.08779	0.000492	0.002153
CYCLOPENTANE	0.0051	0.08779	0.000448	0.001961
TOLUENE	0.0023	0.08779	0.000202	0.000884
2 ME PROPANE	0.0714	0.08779	0.006268	0.027456
OCTANES	0.007	0.08779	0.000615	0.002692
ETHYL BENZENE	0.0009	0.08779	7.9E-05	0.000346
XYLENE	0.0057	0.08779	0.0005	0.002192
2 ME BUTANE	0.0629	0.08779	0.005522	0.024187
OTHER	0.1501	0.08779	0.013177	0.057719

TOTALS:	1.0705

* Emission Speciation based on EPA AP-42 Profile No. 1208 (for crude oil gathering tanks)

Total Methane Emissions	0	lb/hr	0	tpy
Total Ethane Emissions	0.0081469	lb/hr	0.035685	tpy
Total NM/NE Emissions	0.0858323	lb/hr	0.375961	tpy

Tank Emissions

Description:	Saltwater Storage Tank

Source ID:	21

Date:	1/5/2005

Tank Data	
Manufacturer	Unknown
Volume (bbls)	1500
Volume (gallons)	63000
Height (feet)	
Diameter (feet)	
Color	Gray
Vent	common
Controls	None

Location of stack or vent		
UTM Zone	15	
Horizontal	500.725	kmE
Vertical	3287.581	kmN

Identification	
EID	
EPN	
FIN	
CIN	

Control Efficiency		
Control		
NOx	0	%
CO	0	%
VOC	0	%

Action:	Change

Product Data	
True Vapor Pressure (psi)	0.35
Reid Vapor Pressure (psi)	5
Gravity (API)	40
Quantity (bbls/day)	4.0
Quantity (bbls/year)	1460.0
Vapor Molecular Weight (lb/lb mole)	50

Stack and Discharge Physical Characteristics		
Height above grade	36	feet
Diameter at discharge	0.3	inches
Area of stack	0.0003	ft ^2
Stack exit temperature	78	deg F

Operating Characteristics		
Normal Operating Time	8760	
hours/day	24	
days/week	7	
weeks/year	52	52.145

Facility Data	
Operator	Hilcorp Energy Company
Field Name	Hogg Bayou
Site Name	

Total VOC Working and Standing Emissions from Tanks Program:	0.00579	lb/hr	1% of oil thruput
Total VOC Flash Emissions from Vazquez-Beggs Correlation Program:	0.082	lb/hr	1% of oil thruput

Total Tank Unspeciated VOC Emissions: 0.08779 lb/hr

Tank Size and Dimensions		
Volume	Height	Diameter
100		
210	20	10
400	20	12
500		
1000	24	17
1500		
10000		

Common Liquid Properties			
	TVP	RVP	VMW
Crude Oil	3.4	5	50
Saltwater	0.35		20.51

Annual Process Rate =	1460.00	bbl/year

Tank VOC Emission Speciation Calculation Worksheet

Compound	Weight %	Weight of Gas (lb/hr)	Speciated lb/hr	Speciated tons/year
NITROGEN		0.08779	0	0
CARBON DIOXIDE		0.08779	0	0
HYDROGEN SULFIDE		0.08779	0	0
METHANE		0.08779	0	0
ETHANE	0.0928	0.08779	0.008147	0.035685
PROPANE	0.2584	0.08779	0.022685	0.099364
I-BUTANE	0.0714	0.08779	0.006268	0.027456
N-BUTANE	0.2003	0.08779	0.017584	0.077023
2 METHYL PENTANE	0.018	0.08779	0.00158	0.006922
N-PENTANE	0.073	0.08779	0.006409	0.028071
3 METHYL PENTANE	0.0103	0.08779	0.000904	0.003961
HEXANE	0.022	0.08779	0.001931	0.00846
BENZENE	0.0012	0.08779	0.000105	0.000461
CYCLOHEXANE	0.0009	0.08779	7.9E-05	0.000346
HEPTANE	0.0112	0.08779	0.000983	0.004307
2,2,4-TMC5	0.0056	0.08779	0.000492	0.002153
CYCLOPENTANE	0.0051	0.08779	0.000448	0.001961
TOLUENE	0.0023	0.08779	0.000202	0.000884
2 ME PROPANE	0.0714	0.08779	0.006268	0.027456
OCTANES	0.007	0.08779	0.000615	0.002692
ETHYL BENZENE	0.0009	0.08779	7.9E-05	0.000346
XYLENE	0.0057	0.08779	0.0005	0.002192
2 ME BUTANE	0.0629	0.08779	0.005522	0.024187
OTHER	0.1501	0.08779	0.013177	0.057719

TOTALS:	1.0705

* Emission Speciation based on EPA AP-42 Profile No. 1208 (for crude oil gathering tanks)

Total Methane Emissions	0	lb/hr	0	tpy
Total Ethane Emissions	0.0081469	lb/hr	0.035685	tpy
Total NM/NE Emissions	0.0858323	lb/hr	0.375961	tpy

TANKS 4.0
Emissions Report - Detail Format
Tank Identification and Physical Characteristics

.579 lb/hr wis
8.38 lb/hr flash

Identification

User Identification:	300 bbl tank
City:	Lake Charles
State:	Louisiana
Company:	Hilcorp Energy Company
Type of Tank:	Vertical Fixed Roof Tank
Description:	2-300 bbl oil tanks 800 bopd, 400 bopd to each tank 40 gravity oil

Tank Dimensions

Shell Height (ft):	16.00
Diameter (ft):	12.00
Liquid Height (ft):	15.00
Avg. Liquid Height (ft):	14.00
Volume (gallons):	12,690.44
Turnovers:	483.19
Net Throughput (gal/yr):	6,131,895.80
Is Tank Heated (y/n):	N

Paint Characteristics

Shell Color/Shade:	Gray/Medium
Shell Condition:	Good
Roof Color/Shade:	Gray/Medium
Roof Condition:	Good

Roof Characteristics

Type:	Cone
Height (ft):	0.00
Slope (ft/ft) (Cone Roof):	0.06

Breather Vent Settings

Vacuum Settings (psig):	-1.00
Pressure Settings (psig):	1.00

Meteorological Data used in Emissions Calculations: Lake Charles, Louisiana (Avg Atmospheric Pressure = 14.73 psia)

Vertical Fixed Roof Tank
Lake Charles, Louisiana

TANKS 4.0
Emissions Report - Detail Format
Liquid Contents of Storage Tank

Mixture/Component	Month	Daily Liquid Surf. Temperatures (deg F) Avg.	Min.	Max.	Liquid Bulk Temp. (deg F)	Vapor Pressures (psia) Avg.	Min.	Max.	Vapor Mol. Weight	Liquid Mass Fract.	Vapor Mass Fract.	Mol. Weight	Basis for Vapor Pressure Calculations
Crude oil (RVP 5)	All	77.32	66.93	87.70	70.83	3.9996	3.2915	4.8239	50.0000			207.00	Option 4: RVP=5

Vertical Fixed Roof Tank
Lake Charles, Louisiana

TANKS 4.0
Emissions Report - Detail Format
Detail Calculations (AP-42)

Annual Emission Calculations	
Standing Losses (lb):	70.9331
Vapor Space Volume (cu ft):	240.3318
Vapor Density (lb/cu ft):	0.0347
Vapor Space Expansion Factor:	0.0338
Vented Vapor Saturation Factor:	0.6894
Tank Vapor Space Volume	
Vapor Space Volume (cu ft):	240.3318
Tank Diameter (ft):	12.0000
Vapor Space Outage (ft):	2.1250
Tank Shell Height (ft):	16.0000
Average Liquid Height (ft):	14.0000
Roof Outage (ft):	0.1250
Roof Outage (Cone Roof)	
Roof Outage (ft):	0.1250
Roof Height (ft):	0.0000
Roof Slope (ft/ft):	0.0625
Shell Radius (ft):	6.0000
Vapor Density	
Vapor Density (lb/cu ft):	0.0347
Vapor Molecular Weight (lb/lb-mole):	50.0000
Vapor Pressure at Daily Average Liquid Surface Temperature (psia):	3.9995
Daily Avg. Liquid Surface Temp. (deg. R):	536.9874
Daily Average Ambient Temp. (deg. F):	67.7458
Ideal Gas Constant R (psia cuft / (lb-mol-deg R)):	10.731
Liquid Bulk Temperature (deg. R):	530.4958
Tank Paint Solar Absorptance (Shell):	0.6800
Tank Paint Solar Absorptance (Roof):	0.6800
Daily Total Solar Insulation Factor (Btu/sqft day):	1,460.6846
Vapor Space Expansion Factor	
Vapor Space Expansion Factor:	0.0338
Daily Vapor Temperature Range (deg. R):	41.5454
Daily Vapor Pressure Range (psia):	1.5324
Breather Vent Press. Setting Range(psia):	2.0000
Vapor Pressure at Daily Average Liquid Surface Temperature (psia):	3.9995
Vapor Pressure at Daily Minimum Liquid Surface Temperature (psia):	3.2915
Vapor Pressure at Daily Maximum Liquid Surface Temperature (psia):	4.8239
Daily Avg. Liquid Surface Temp. (deg R):	536.9874
Daily Min. Liquid Surface Temp. (deg R):	526.6011
Daily Max. Liquid Surface Temp. (deg R):	547.3738
Daily Ambient Temp. Range (deg. R):	19.0750
Vented Vapor Saturation Factor	
Vented Vapor Saturation Factor:	0.6894
Vapor Pressure at Daily Average Liquid Surface Temperature (psia):	3.9995
Vapor Space Outage (ft):	2.1250

Vertical Fixed Roof Tank
Lake Charles, Louisiana

TANKS 4.0
Emissions Report - Detail Format
Detail Calculations (AP-42)- (Continued)

Working Losses (lb):	5,008.9953
Vapor Molecular Weight (lb/lb-mole):	50.0000
Vapor Pressure at Daily Average Liquid Surface Temperature (psia):	3.9995
Annual Net Throughput (gal/yr.):	6,131,895.803
	1
Annual Turnovers:	483.1900
Turnover Factor:	0.2288
Maximum Liquid Volume (gal):	12,690.4443
Maximum Liquid Height (ft):	15.0000
Tank Diameter (ft):	12.0000
Working Loss Product Factor:	0.7500
Total Losses (lb):	5,079.9283

Vertical Fixed Roof Tank
Lake Charles, Louisiana

TANKS 4.0
Emissions Report - Detail Format
Individual Tank Emission Totals

Annual Emissions Report

	Losses(lbs)		
Components	Working Loss	Breathing Loss	Total Emissions
Crude oil (RVP 5)	5,009.00	70.93	5,079.93

FLASH GAS QUANTIFICATION USING VASQUEZ-BEGGS CORRELATION

		Value	Equations / Comments	Constraints			
API	= Oil Gravity	40.00	From liquid analysis	16	> API >	58	°API
C1	= Vasquez-Beggs constant	0.0178	If APIG > 30°, then C1=0.0178; else C1=0.0362	50	> UVP+Pa >	5250	(psia)
C2	= Vasquez-Beggs constant	1.187	If APIG > 30°, then C2=1.187; else C2=1.0937	70	> T >	295	(°F)
C3	= Vasquez-Beggs constant	23.931	If APIG > 30°, then C3=23.931; else C3=25.724	0.56	> SG >	1.18	(MW/28.97)
SG	= Specific gravity of gas in separator (air = 1.0)	0.655	From gas analysis obtained from upstream vessel	18	> Mv >	125	(lb/lb-mole)
UVP	= Upstream vessel pressure (psig)	25.00	Vessel upstream of flash source (tanks)	0.00	> Me+Et >	50.00	
T	= Upstream temperature (°F)	150.00	Default = 100°F (fluid temperature in upstream vessel)	20	> GOR >	2070	
TOC	= TOC weight percent (wt. % of total stream)	99.64	Removes gas constituents such as N2, CO2, H2S, etc.				
Pa	= Atmospheric pressure (psia)	15.025	Default = 14.696				
Q	= Throughput (bbls/yr)	146000.00					
Mv	= Vapor molecular weight (lb/lb-mole)	50.00	Default: Crude = 50				
E	= Control efficiency (% reduction)	0.00	Efficiency of any control device present (flare, VRU, etc.)				
Me	= Methane weight percent	0.00					
Et	= Ethane weight percent	9.28					
	Calculated Parameters						
CSG	= Corrected specific gravity	0.55	SG*(1.0+0.00005912*API*T*log[(UVP+Pa)/114.7]				
GOR	= Gas to oil ratio (scf/bbl)	3.74	C1*CSG*(UVP+Pa)^C2*exp[(C3*API)/(T+460)]				
Lf_{TOT}	= Flash losses (tons, TOC)	35.92	GOR*Q*Mv/379*(100-E)/100*TOC/100/2000				
	VOC emissions	32.58	(TOC-ME-Et)/TOC*Lf_{TOT}				
	Methane emissions	0.00	(Me/TOC)*Lf_{TOT}				
	Ethane emissions	3.35	(Et/TOC)*Lf_{TOT}				

lb/hr= 8.20

Tank Emissions

Description:	Saltwater Tank (standby)

Source ID:	10

Date:	1/5/2005

Tank Data	
Manufacturer	Unknown
Volume (bbls)	12000
Volume (gallons)	504000
Height (feet)	
Diameter (feet)	
Color	Gray
Vent	common
Controls	None

Location of stack or vent		
UTM Zone	15	
Horizontal	500.725	kmE
Vertical	3287.581	kmN

Identification	
EID	
EPN	
FIN	
CIN	

Control Efficiency		
Control		
NOx	0	%
CO	0	%
VOC	0	%

Action:	Change

Product Data	
True Vapor Pressure (psi)	0.35
Reid Vapor Pressure (psi)	5
Gravity (API)	40
Quantity (bbls/day)	0.0
Quantity (bbls/year)	0.0
Vapor Molecular Weight (lb/lb mole)	50

Stack and Discharge Physical Characteristics		
Height above grade	36	feet
Diameter at discharge	0.3	inches
Area of stack	0.0003	ft ^2
Stack exit temperature	78	deg F

Operating Characteristics		
Normal Operating Time	8760	
hours/day	24	
days/week	7	
weeks/year	52	52.145

Facility Data	
Operator	Hilcorp Energy Company
Field Name	Hogg Bayou
Site Name	

Total VOC Working and Standing Emissions from Tanks Program:	0	lb/hr	1% of oil thruput
Total VOC Flash Emissions from Vazquez-Beggs Correlation Program:	0	lb/hr	1% of oil thruput

Total Tank Unspeciated VOC Emissions: 0 lb/hr

Tank Size and Dimensions		
Volume	Height	Diameter
100		
210	20	10
400	20	12
500		
1000	24	17
1500		
10000		

Common Liquid Properties			
	TVP	RVP	VMW
Crude Oil	3.4	5	50
Saltwater	0.35		20.51

Annual Process Rate =	0.00	bbl/year

Tank VOC Emission Speciation Calculation Worksheet

Compound	Weight %	Weight of Gas (lb/hr)	Speciated lb/hr	Speciated tons/year
NITROGEN		0	0	0
CARBON DIOXIDE		0	0	0
HYDROGEN SULFIDE		0	0	0
METHANE		0	0	0
ETHANE	0.0928	0	0	0
PROPANE	0.2584	0	0	0
I-BUTANE	0.0714	0	0	0
N-BUTANE	0.2003	0	0	0
2 METHYL PENTANE	0.018	0	0	0
N-PENTANE	0.073	0	0	0
3 METHYL PENTANE	0.0103	0	0	0
HEXANE	0.022	0	0	0
BENZENE	0.0012	0	0	0
CYCLOHEXANE	0.0009	0	0	0
HEPTANE	0.0112	0	0	0
2,2,4-TMC5	0.0056	0	0	0
CYCLOPENTANE	0.0051	0	0	0
TOLUENE	0.0023	0	0	0
2 ME PROPANE	0.0714	0	0	0
OCTANES	0.007	0	0	0
ETHYL BENZENE	0.0009	0	0	0
XYLENE	0.0057	0	0	0
2 ME BUTANE	0.0629	0	0	0
OTHER	0.1501	0	0	0

TOTALS:	1.0705

* Emission Speciation based on EPA AP-42 Profile No. 1208 (for crude oil gathering tanks)

Total Methane Emissions	0	lb/hr	0	tpy
Total Ethane Emissions	0	lb/hr	0	tpy
Total NM/NE Emissions	0	lb/hr	0	tpy

Fugitive Emissions

Description:	Fugitives

Source ID:	11

Date:	1/5/2005

Equipment Inventory	
Gas Service Vessel Count	na
Oil Service Vessel Count	na
Total Vessel Count	37
Number of Wells	na
NM/NW VOC Weight Percent	na
Valves	na
Relief Valves	na
Open Ended Lines	na
Flanges and Connections	na
Compressor Seals	na
Pump Seals	na

Location of stack or vent		
UTM Zone	15	
Horizontal	500.725	mE
Vertical	3287.581	mN

Identification	
EID	
EPN	
FIN	
CIN	

Control Efficiency		
Control		
NOx	0	%
CO	0	%
VOC	0	%

Action:	Change

Emission Totals	
224.7137	lb/day
9.363069	lb/hr

Operating Characteristics		
Normal Operating Time	8760	
hours/day	24.0	
days/week	7.0	
weeks/year	52	52.145

Facility Data	
Operator	Hilcorp Energy Company
Field Name	Hogg Bayou Facility
Site Name	

Gas Speciation (API Publication No. 4615, Table ES-4)

Pollutant	Methane	NMHC	VOC	C6+	Benzene	Toluene	Ethylbnz.	Xylene
Onshore Light Crude	0.613	0.387	0.292	0.0243	0.00027	0.00075	0.00017	0.00036
Onshore Heavy Crude	0.942	0.058	0.03	0.00752	0.00935	0.00344	0.00051	0.00372
Onshore Gas Production	0.92	0.08	0.035	0.00338	0.00023	0.00039	0.00002	0.0001
Onshore Gas Plants	0.564	0.436	0.253	0.00923	0.00123	0.00032	0.00001	0.00004
Offshore Oil & Gas	0.791	0.21	0.11	0.00673	0.00133	0.00089	0.00016	0.00027
Speciation Factors for this application	0.92	0.08	0.035	0.00338	0.00023	0.00039	0.00002	0.0001

Average Emission Factors (lb/component-day) (API Publication No. 4615, Table ES-1)

Component	Connection	Flange	Open End	Pump	Valve	Others
Light Crude	0.00866	0.00407	0.0638	0.0168	0.07	0.397
Heavy Crude	0.000422	0.00116	0.00818	0	0.000686	0.0037
Gas Production	0.017	0.00623	0.0363	0.0103	0.139	0.486
Gas Plants	0.0145	0.0232	0.0546	0.609	0.204	0.257
Offshore	0.0057	0.0104	0.0537	0.0103	0.0272	0.367
Factors for this application	0.017	0.00623	0.0363	0.0103	0.139	0.486
AP42 Component Factor	97.4	97.4	4.6	0.2	25.5	0.2
Number of Components	3603.8	3603.8	170.2	7.4	943.5	7.4
Emissions (lb/day)	61.2646	22.45167	6.17826	0.07622	131.1465	3.5964

Fugitive Emission VOC Speciation Worksheet

Compound	Weight Fraction	Gas Weight (lb/hr)	(lb/hr)	tons/year
METHANE	0.92000	9.36306892	8.61402	37.73097
NMHC	0.08000	9.36306892	0.74905	3.28095
VOC	0.03500	9.36306892	0.32771	1.43542
C6+	0.00338	9.36306892	0.03165	0.13862
BENZENE	0.00023	9.36306892	0.00215	0.00943
TOLUENE	0.00039	9.36306892	0.00365	0.01599
ETHYL BENZENE	0.00002	9.36306892	0.00019	0.00082
XYLENE	0.00010	9.36306892	0.00094	0.00410

TOTALS:	1.0

Total Gas Weight: 9.363068917

Gas Dehydrator Still Vent

Description:	Glycol Reboiler Still Vent

Source ID:	15

Date:	1/5/2005

Reboiler Data	
Dry Gas Rate (mmscfd)	14.00
Dry Gas Water (lb/mmscf)	7
Glycol Pump	Kimray
Pump Speed	na
Controls (cnd./burn.)	yes

Location of stack or vent		
UTM Zone	15	
Horizontal	500.725	mE
Vertical	3287.581	mN

Identification	
EID	
EPN	
FIN	
CIN	

Control Efficiency		
Control		
NOx	0	%
CO	0	%
VOC	98	%

Action:	Change

Operating Characteristics		
Normal Operating Time	8760	
hours/day	24.0	
days/week	7.0	
weeks/year	52	52.145

Facility Data	
Operator	Hilcorp Energy Company
Field Name	Hogg Bayou
Site Name	

Emissions Data From GRI-GLYCalc Program

Component	lb/hr	tons/year
Methane	0.0012	0.0053
Ethane	0.0005	0.002
Propane	0.0008	0.0034
Isobutane	0.0008	0.0035
n-Butane	0.0009	0.0038
I-Pentane	0.0007	0.0032
n-Pentane	0.0007	0.003
n-Hexane	0	0
Other Hexanes	0	0
Heptanes	0	0
2,2,4-TMP	0	0
Benzene	0	0
Toluene	0	0
Ethylbenzene	0	0
Xylene	0	0
Total HC	0.0286	0.1251
Total VOC	0.0269	0.1178
Total HAP	0	0

GRI-GLYCalc VERSION 3.0 - AGGREGATE CALCULATIONS REPORT

Case Name: Hog Bayou
File Name:
Date: January 05, 2005

DESCRIPTION:

Description: 14 mmscfd to reboiler
Controlled to condenser and burner

Annual Hours of Operation: 8760.0 hours/yr

EMISSIONS REPORTS:

CONTROL DEVICE EMISSIONS

Component	lbs/hr	lbs/day	tons/yr
Methane	0.0012	0.029	0.0053
Ethane	0.0005	0.011	0.0020
Propane	0.0008	0.019	0.0034
Isobutane	0.0008	0.019	0.0035
n-Butane	0.0009	0.021	0.0038
Isopentane	0.0007	0.018	0.0032
n-Pentane	0.0007	0.016	0.0030
Cyclopentane	0.0230	0.552	0.1008
Total Emissions	0.0286	0.685	0.1251

Total Hydrocarbon Emissions 0.0286 0.685 0.1251
Total VOC Emissions 0.0269 0.645 0.1178

UNCONTROLLED REGENERATOR EMISSIONS

Component	lbs/hr	lbs/day	tons/yr
Methane	0.0605	1.452	0.2650
Ethane	0.0230	0.553	0.1008
Propane	0.0394	0.945	0.1725
Isobutane	0.0403	0.966	0.1764
n-Butane	0.0434	1.041	0.1900
Isopentane	0.0369	0.885	0.1616
n-Pentane	0.0339	0.814	0.1485
Cyclopentane	1.1560	27.745	5.0634
Total Emissions	1.4334	34.401	6.2782

Total Hydrocarbon Emissions 1.4334 34.401 6.2782
Total VOC Emissions 1.3499 32.396 5.9124

FLASH TANK OFF GAS

Component	lbs/hr	lbs/day	tons/yr
Methane	10.4675	251.219	45.8475
Ethane	0.9929	23.830	4.3490
Propane	0.6518	15.644	2.8550
Isobutane	0.3938	9.451	1.7247
n-Butane	0.3069	7.366	1.3442
Isopentane	0.2132	5.116	0.9336
n-Pentane	0.1490	3.576	0.6526
Cyclopentane	1.3636	32.727	5.9727
Total Emissions	14.5386	348.927	63.6793
Total Hydrocarbon Emissions	14.5386	348.927	63.6793
Total VOC Emissions	3.0783	73.879	13.4828

EQUIPMENT REPORTS:

CONDENSER AND INCINERATOR/FLARE (Fire box)

Condenser Temperature: 95.00 deg. F
Condenser Pressure: 10.00 psia
Condenser Duty: 0.01 MM BTU/hr
Produced Water: 2.65 bbls/day
Ambient Temperature: 80.00 deg. F
Excess Oxygen: 5.00 %
Combustion Efficiency: 98.00 %
Supplemental Fuel Requirement: 5.89e-003 MM BTU/hr

Component	Emitted	Destroyed
Methane	2.00%	98.00%
Ethane	2.00%	98.00%
Propane	2.00%	98.00%
Isobutane	2.00%	98.00%
n-Butane	2.00%	98.00%
Isopentane	2.00%	98.00%
n-Pentane	2.00%	98.00%
Cyclopentane	1.99%	98.01%

ABSORBER

NOTE: Because the Calculated Absorber Stages was below the minimum allowed, GRI-GLYCalc has set the number of Absorber Stages to 1.25 and has calculated a revised Dry Gas Dew Point.

Calculated Absorber Stages: 1.25
Calculated Dry Gas Dew Point: 4.89 lbs. H2O/MMSCF

Temperature: 102.0 deg. F
Pressure: 828.0 psig
Dry Gas Flow Rate: 14.0000 MMSCF/day
Glycol Losses with Dry Gas: 0.0114 lb/hr
Wet Gas Water Content: Saturated
Calculated Wet Gas Water Content: 71.14 lbs. H2O/MMSCF
Specified Lean Glycol Recirc. Ratio: 3.00 gal/lb H2O

Component	Remaining in Dry Gas	Absorbed in Glycol
Water	6.86%	93.14%
Carbon Dioxide	99.84%	0.16%
Nitrogen	99.99%	0.01%
Methane	99.99%	0.01%
Ethane	99.96%	0.04%
Propane	99.94%	0.06%
Isobutane	99.91%	0.09%
n-Butane	99.89%	0.11%
Isopentane	99.89%	0.11%
n-Pentane	99.86%	0.14%
Cyclopentane	99.40%	0.60%

FLASH TANK

Flash Temperature: 85.0 deg. F
Flash Pressure: 5.0 psig

Component	Left in Glycol	Removed in Flash Gas
Water	99.91%	0.09%
Carbon Dioxide	8.95%	91.05%
Nitrogen	0.53%	99.47%
Methane	0.57%	99.43%
Ethane	2.27%	97.73%
Propane	5.70%	94.30%
Isobutane	9.28%	90.72%
n-Butane	12.39%	87.61%
Isopentane	15.08%	84.92%
n-Pentane	18.86%	81.14%
Cyclopentane	46.14%	53.86%

REGENERATOR

No Stripping Gas used in regenerator.

Component	Remaining in Glycol	Distilled Overhead

Water	29.00%	71.00%
Carbon Dioxide	0.00%	100.00%
Nitrogen	0.00%	100.00%
Methane	0.00%	100.00%
Ethane	0.00%	100.00%
Propane	0.00%	100.00%
Isobutane	0.00%	100.00%
n-Butane	0.00%	100.00%
Isopentane	2.53%	97.47%
n-Pentane	2.14%	97.86%
Cyclopentane	1.02%	98.98%

STREAM REPORTS:

WET GAS STREAM

Temperature: 102.00 deg. F
Pressure: 842.70 psia
Flow Rate: 5.84e+005 scfh

Component	Conc. (vol%)	Loading (lb/hr)
Water	1.50e-001	4.16e+001
Carbon Dioxide	2.24e+000	1.52e+003
Nitrogen	1.99e-001	8.57e+001
Methane	9.20e+001	2.27e+004
Ethane	3.06e+000	1.42e+003
Propane	1.06e+000	7.17e+002
Isobutane	4.05e-001	3.63e+002
n-Butane	2.69e-001	2.40e+002
Isopentane	1.55e-001	1.72e+002
n-Pentane	9.29e-002	1.03e+002
Cyclopentane	3.69e-001	3.99e+002
Total Components	100.00	2.78e+004

DRY GAS STREAM

Temperature: 102.00 deg. F
Pressure: 842.70 psia
Flow Rate: 5.83e+005 scfh

Component	Conc. (vol%)	Loading (lb/hr)
Water	1.03e-002	2.85e+000
Carbon Dioxide	2.24e+000	1.52e+003
Nitrogen	1.99e-001	8.57e+001

Methane	9.21e+001	2.27e+004
Ethane	3.06e+000	1.42e+003
Propane	1.06e+000	7.16e+002
Isobutane	4.06e-001	3.63e+002
n-Butane	2.69e-001	2.40e+002
Isopentane	1.55e-001	1.72e+002
n-Pentane	9.29e-002	1.03e+002
Cyclopentane	3.68e-001	3.97e+002
Total Components	100.00	2.77e+004

LEAN GLYCOL STREAM

Temperature: 102.00 deg. F
Flow Rate: 1.87e+000 gpm

Component	Conc. (wt%)	Loading (lb/hr)
TEG	9.85e+001	1.04e+003
Water	1.50e+000	1.58e+001
Carbon Dioxide	2.28e-011	2.40e-010
Nitrogen	1.04e-013	1.10e-012
Methane	8.57e-018	9.03e-017
Ethane	2.36e-008	2.49e-007
Propane	1.71e-009	1.81e-008
Isobutane	8.79e-010	9.26e-009
n-Butane	6.29e-010	6.63e-009
Isopentane	9.10e-005	9.58e-004
n-Pentane	7.02e-005	7.40e-004
Cyclopentane	1.14e-003	1.20e-002
Total Components	100.00	1.05e+003

RICH GLYCOL AND PUMP GAS STREAM

Temperature: 102.00 deg. F
Pressure: 842.70 psia
Flow Rate: 1.99e+000 gpm
NOTE: Stream has more than one phase.

Component	Conc. (wt%)	Loading (lb/hr)
TEG	9.34e+001	1.04e+003
Water	4.91e+000	5.45e+001
Carbon Dioxide	2.63e-001	2.93e+000
Nitrogen	3.66e-003	4.06e-002
Methane	9.48e-001	1.05e+001
Ethane	9.15e-002	1.02e+000

Propane	6.22e-002	6.91e-001
Isobutane	3.91e-002	4.34e-001
n-Butane	3.15e-002	3.50e-001
Isopentane	2.26e-002	2.51e-001
n-Pentane	1.65e-002	1.84e-001
Cyclopentane	2.28e-001	2.53e+000
Total Components	100.00	1.11e+003

FLASH TANK OFF GAS STREAM

Temperature: 85.00 deg. F
Pressure: 19.70 psia
Flow Rate: 3.04e+002 scfh

Component	Conc. (vol%)	Loading (lb/hr)
Water	3.41e-001	4.93e-002
Carbon Dioxide	7.55e+000	2.66e+000
Nitrogen	1.80e-001	4.04e-002
Methane	8.14e+001	1.05e+001
Ethane	4.12e+000	9.93e-001
Propane	1.84e+000	6.52e-001
Isobutane	8.45e-001	3.94e-001
n-Butane	6.59e-001	3.07e-001
Isopentane	3.69e-001	2.13e-001
n-Pentane	2.58e-001	1.49e-001
Cyclopentane	2.43e+000	1.36e+000
Total Components	100.00	1.73e+001

FLASH TANK GLYCOL STREAM

Temperature: 85.00 deg. F
Flow Rate: 1.95e+000 gpm

Component	Conc. (wt%)	Loading (lb/hr)
TEG	9.49e+001	1.04e+003
Water	4.98e+000	5.45e+001
Carbon Dioxide	2.40e-002	2.62e-001
Nitrogen	1.99e-005	2.17e-004
Methane	5.53e-003	6.05e-002
Ethane	2.11e-003	2.30e-002
Propane	3.60e-003	3.94e-002
Isobutane	3.68e-003	4.03e-002
n-Butane	3.97e-003	4.34e-002
Isopentane	3.46e-003	3.79e-002

n-Pentane	3.17e-003	3.46e-002
Cyclopentane	1.07e-001	1.17e+000
Total Components	100.00	1.09e+003

REGENERATOR OVERHEADS STREAM

Temperature: 212.00 deg. F
Pressure: 14.70 psia
Flow Rate: 8.26e+002 scfh

Component	Conc. (vol%)	Loading (lb/hr)
Water	9.86e+001	3.87e+001
Carbon Dioxide	2.73e-001	2.62e-001
Nitrogen	3.56e-004	2.17e-004
Methane	1.73e-001	6.05e-002
Ethane	3.52e-002	2.30e-002
Propane	4.10e-002	3.94e-002
Isobutane	3.18e-002	4.03e-002
n-Butane	3.43e-002	4.34e-002
Isopentane	2.35e-002	3.69e-002
n-Pentane	2.16e-002	3.39e-002
Cyclopentane	7.57e-001	1.16e+000
Total Components	100.00	4.04e+001

CONDENSER PRODUCED WATER STREAM

Temperature: 95.00 deg. F
Flow Rate: 7.72e-002 gpm

Component	Conc. (wt%)	Loading (lb/hr)	(ppm)
Water	1.00e+002	3.86e+001	999716.
Carbon Dioxide	1.41e-002	5.45e-003	141.
Nitrogen	2.62e-007	1.01e-007	0.
Methane	1.50e-004	5.78e-005	1.
Ethane	6.98e-005	2.70e-005	1.
Propane	9.89e-005	3.82e-005	1.
Isobutane	5.69e-005	2.20e-005	1.
n-Butane	8.37e-005	3.23e-005	1.
Isopentane	5.21e-005	2.01e-005	1.
n-Pentane	5.25e-005	2.03e-005	1.
Cyclopentane	1.37e-002	5.29e-003	137.
Total Components	100.00	3.86e+001	1000000.

CONDENSER RECOVERED OIL STREAM

Temperature: 95.00 deg. F

The calculated flow rate is less than 0.000001 #mol/hr.
The stream flow rate and composition are not reported.

CONDENSER VENT STREAM

Temperature: 95.00 deg. F
Pressure: 10.00 psia
Flow Rate: 1.24e+001 scfh

Component	Conc. (vol%)	Loading (lb/hr)
Water	8.22e+000	4.86e-002
Carbon Dioxide	1.78e+001	2.56e-001
Nitrogen	2.36e-002	2.17e-004
Methane	1.15e+001	6.04e-002
Ethane	2.33e+000	2.30e-002
Propane	2.72e+000	3.93e-002
Isobutane	2.11e+000	4.02e-002
n-Butane	2.28e+000	4.34e-002
Isopentane	1.56e+000	3.69e-002
n-Pentane	1.43e+000	3.39e-002
Cyclopentane	5.01e+001	1.15e+000
Total Components	100.00	1.73e+000

INCINERATOR OFF GAS STREAM

Temperature: 1000.00 deg. F
Pressure: 14.70 psia
Flow Rate: 1.84e-001 scfh

Component	Conc. (vol%)	Loading (lb/hr)
Methane	1.55e+001	1.21e-003
Ethane	3.15e+000	4.60e-004
Propane	3.68e+000	7.87e-004
Isobutane	2.86e+000	8.05e-004
n-Butane	3.08e+000	8.67e-004
Isopentane	2.11e+000	7.37e-004
n-Pentane	1.94e+000	6.78e-004
Cyclopentane	6.77e+001	2.30e-002
Total Components	100.00	2.86e-002

GAS MEASUREMENT SERVICES

1808 St. Louis Canal Road
Houma, LA 70364
985/876-7049 Fax 985/876-7069

GAS ANALYSIS REPORT NO.: 7-092004-2 (96163) DATE: 09/20/04

FOR: HILCORP ENERGY
ATTN: JANET LEE
P.O. BOX 61229
HOUSTON TX 77208

SAMPLE IDENTIFICATION:
COMPANY: HILCORP ENERGY
FIELD: HOG BAYOU
LEASE: TENN SALES #1
STA #:

SAMPLE DATA: DATE: 09/17/04 BY: P. CHAPMAN
PSIG: 828 TEMP: 102 DEG.F. GRAV:
MCF/D: DIF: IN. DP: LBS H20

REMARKS:

CYL #330

COMPONENT ANAYLYSIS

COMPONENT		MOL PERCENT	GPM @ 15.025 PSIA
CARBON DIOXIDE	(CO2)	2.245	
NITROGEN	(N2)	0.199	
METHANE	(C1)	92.142	
ETHANE	(C2)	3.064	0.835
PROPANE	(C3)	1.057	0.297
ISO-BUTANE	(IC4)	0.406	0.135
N-BUTANE	(NC4)	0.269	0.087
ISO-PENTANE	(IC5)	0.155	0.058
N-PENTANE	(NC5)	0.093	0.034
HEXANES PLUS	(C6+)	0.370	0.167
TOTAL		100.000	

ETHANE + GPM: 1.613
PROPANE + GPM: 0.778
ISO-PENTANE + GPM: 0.259

MOL WEIGHT: 18.13
BTU/LB: 22236.8

COMPRESSIBILITY FACTOR: 0.9975
SPECIFIC GRAVITY @ 60 DEG. F. (AIR = 1): 0.628

BTU/CUFT. (REAL) 60 DEG.F. - PSIA:	14.650	14.696	14.730	15.025
DRY:	1062.1	1065.4	1067.9	1089.3
SAT:	1043.5	1046.8	1049.3	1070.7

This document shall not be reproduced, except in full, without the written approval of Sherry Laboratories, Inc.

Tank Emissions

Description:	Methanol Tank (standby)

Source ID:	17

Date:	1/5/2005

Tank Data	
Manufacturer	Unknown
Volume (bbls)	300
Volume (gallons)	12600
Height (feet)	
Diameter (feet)	
Color	Gray
Vent	common
Controls	None

Location of stack or vent		
UTM Zone	15	
Horizontal	500.725	kmE
Vertical	3287.581	kmN

Identification	
EID	
EPN	
FIN	
CIN	

Control Efficiency		
Control		
NOx	0	%
CO	0	%
VOC	0	%

Action:	Change

Product Data	
True Vapor Pressure (psi)	0.00
Reid Vapor Pressure (psi)	0
Gravity (API)	0
Quantity (bbls/day)	0.0
Quantity (bbls/year)	0.0
Vapor Molecular Weight (lb/lb mole)	0

Stack and Discharge Physical Characteristics		
Height above grade	36	feet
Diameter at discharge	0.3	inches
Area of stack	0.0003	ft ^2
Stack exit temperature	78	deg F

Operating Characteristics		
Normal Operating Time	8760	
hours/day	24	
days/week	7	
weeks/year	52	52.145

Facility Data	
Operator	Hilcorp Energy Company
Field Name	Hogg Bayou
Site Name	

Total VOC Working and Standing Emissions from Tanks Program: 0 lb/hr

Total VOC Flash Emissions from Vazquez-Beggs Correlation Program: 0 lb/hr

Total Tank Unspeciated VOC Emissions: 0 lb/hr

Tank Size and Dimensions		
Volume	Height	Diameter
100		
210	20	10
400	20	12
500		
1000	24	17
1500		
10000		

Common Liquid Properties			
	TVP	RVP	VMW
Crude Oil	3.4	5	50
Saltwater	0.35		20.51

Annual Process Rate =	0.00	bbl/year

Tank VOC Emission Speciation Calculation Worksheet

Compound	Weight %	Weight of Gas (lb/hr)	Speciated lb/hr	Speciated tons/year
NITROGEN		0	0	0
CARBON DIOXIDE		0	0	0
HYDROGEN SULFIDE		0	0	0
METHANE		0	0	0
ETHANE	0.0928	0	0	0
PROPANE	0.2584	0	0	0
I-BUTANE	0.0714	0	0	0
N-BUTANE	0.2003	0	0	0
2 METHYL PENTANE	0.018	0	0	0
N-PENTANE	0.073	0	0	0
3 METHYL PENTANE	0.0103	0	0	0
HEXANE	0.022	0	0	0
BENZENE	0.0012	0	0	0
CYCLOHEXANE	0.0009	0	0	0
HEPTANE	0.0112	0	0	0
2,2,4-TMC5	0.0056	0	0	0
CYCLOPENTANE	0.0051	0	0	0
TOLUENE	0.0023	0	0	0
2 ME PROPANE	0.0714	0	0	0
OCTANES	0.007	0	0	0
ETHYL BENZENE	0.0009	0	0	0
XYLENE	0.0057	0	0	0
2 ME BUTANE	0.0629	0	0	0
OTHER	0.1501	0	0	0

TOTALS:	1.0705

* Emission Speciation based on EPA AP-42 Profile No. 1208 (for crude oil gathering tanks)

Total Methane Emissions	0	lb/hr	0	tpy
Total Ethane Emissions	0	lb/hr	0	tpy
Total NM/NE Emissions	0	lb/hr	0	tpy

Tank Emissions

Description:	Methanol Day Tank (standby)	Source ID: 18	Date: 1/5/2005

Tank Data	
Manufacturer	Unknown
Volume (bbls)	7.15
Volume (gallons)	300.3
Height (feet)	
Diameter (feet)	
Color	Gray
Vent	common
Controls	None

Location of stack or vent		
UTM Zone	15	
Horizontal	500.725	kmE
Vertical	3287.581	kmN

Identification	
EID	
EPN	
FIN	
CIN	

Control Efficiency		
Control		
NOx	0	%
CO	0	%
VOC	0	%

Action:	Change

Product Data	
True Vapor Pressure (psi)	0.00
Reid Vapor Pressure (psi)	0
Gravity (API)	0
Quantity (bbls/day)	0.0
Quantity (bbls/year)	0.0
Vapor Molecular Weight (lb/lb mole)	0

Stack and Discharge Physical Characteristics		
Height above grade	36	feet
Diameter at discharge	0.3	inches
Area of stack	0.0003	ft ^2
Stack exit temperature	78	deg F

Operating Characteristics		
Normal Operating Time	8760	
hours/day	24	
days/week	7	
weeks/year	52	52.145

Facility Data	
Operator	Hilcorp Energy Company
Field Name	Hogg Bayou
Site Name	

Total VOC Working and Standing Emissions from Tanks Program:	0	lb/hr
Total VOC Flash Emissions from Vazquez-Beggs Correlation Program:	0	lb/hr

Total Tank Unspeciated VOC Emissions: 0 lb/hr

Tank Size and Dimensions		
Volume	Height	Diameter
100		
210	20	10
400	20	12
500		
1000	24	17
1500		
10000		

Common Liquid Properties			
	TVP	RVP	VMW
Crude Oil	3.4	5	50
Saltwater	0.35		20.51

Annual Process Rate =	0.00	bbl/year

Tank VOC Emission Speciation Calculation Worksheet

Compound	Weight %	Weight of Gas (lb/hr)	Speciated lb/hr	Speciated tons/year
NITROGEN		0	0	0
CARBON DIOXIDE		0	0	0
HYDROGEN SULFIDE		0	0	0
METHANE		0	0	0
ETHANE	0.0928	0	0	0
PROPANE	0.2584	0	0	0
I-BUTANE	0.0714	0	0	0
N-BUTANE	0.2003	0	0	0
2 METHYL PENTANE	0.018	0	0	0
N-PENTANE	0.073	0	0	0
3 METHYL PENTANE	0.0103	0	0	0
HEXANE	0.022	0	0	0
BENZENE	0.0012	0	0	0
CYCLOHEXANE	0.0009	0	0	0
HEPTANE	0.0112	0	0	0
2,2,4-TMC5	0.0056	0	0	0
CYCLOPENTANE	0.0051	0	0	0
TOLUENE	0.0023	0	0	0
2 ME PROPANE	0.0714	0	0	0
OCTANES	0.007	0	0	0
ETHYL BENZENE	0.0009	0	0	0
XYLENE	0.0057	0	0	0
2 ME BUTANE	0.0629	0	0	0
OTHER	0.1501	0	0	0

TOTALS:	1.0705

* Emission Speciation based on EPA AP-42 Profile No. 1208 (for crude oil gathering tanks)

Total Methane Emissions	0	lb/hr	0	tpy
Total Ethane Emissions	0	lb/hr	0	tpy
Total NM/NE Emissions	0	lb/hr	0	tpy

Tank Emissions

Description:	Sump Tank (emergency)

Source ID:	22

Date:	1/5/2005

Tank Data	
Manufacturer	Unknown
Volume (bbls)	286
Volume (gallons)	12012
Height (feet)	
Diameter (feet)	
Color	Gray
Vent	common
Controls	None

Location of stack or vent		
UTM Zone	15	
Horizontal	500.725	kmE
Vertical	3287.581	kmN

Identification	
EID	
EPN	
FIN	
CIN	

Control Efficiency		
Control		
NOx	0	%
CO	0	%
VOC	0	%

Action:	Change

Product Data	
True Vapor Pressure (psi)	0.00
Reid Vapor Pressure (psi)	0
Gravity (API)	0
Quantity (bbls/day)	0.0
Quantity (bbls/year)	0.0
Vapor Molecular Weight (lb/lb mole)	0

Stack and Discharge Physical Characteristics		
Height above grade	36	feet
Diameter at discharge	0.3	inches
Area of stack	0.0003	ft ^2
Stack exit temperature	78	deg F

Operating Characteristics		
Normal Operating Time	8760	
hours/day	24	
days/week	7	
weeks/year	52	52.145

Facility Data	
Operator	Hilcorp Energy Company
Field Name	Hogg Bayou
Site Name	

Total VOC Working and Standing Emissions from Tanks Program:	0	lb/hr
Total VOC Flash Emissions from Vazquez-Beggs Correlation Program:	0	lb/hr

Total Tank Unspeciated VOC Emissions:	0	lb/hr

Tank Size and Dimensions		
Volume	*Height*	*Diameter*
100		
210	20	10
400	20	12
500		
1000	24	17
1500		
10000		

Common Liquid Properties			
	TVP	RVP	VMW
Crude Oil	3.4	5	50
Saltwater	0.35		20.51

Annual Process Rate =	0.00	bbl/year

Tank VOC Emission Speciation Calculation Worksheet

Compound	Weight %	Weight of Gas (lb/hr)	Speciated lb/hr	Speciated tons/year
NITROGEN		0	0	0
CARBON DIOXIDE		0	0	0
HYDROGEN SULFIDE		0	0	0
METHANE		0	0	0
ETHANE	0.0928	0	0	0
PROPANE	0.2584	0	0	0
I-BUTANE	0.0714	0	0	0
N-BUTANE	0.2003	0	0	0
2 METHYL PENTANE	0.018	0	0	0
N-PENTANE	0.073	0	0	0
3 METHYL PENTANE	0.0103	0	0	0
HEXANE	0.022	0	0	0
BENZENE	0.0012	0	0	0
CYCLOHEXANE	0.0009	0	0	0
HEPTANE	0.0112	0	0	0
2,2,4-TMC5	0.0056	0	0	0
CYCLOPENTANE	0.0051	0	0	0
TOLUENE	0.0023	0	0	0
2 ME PROPANE	0.0714	0	0	0
OCTANES	0.007	0	0	0
ETHYL BENZENE	0.0009	0	0	0
XYLENE	0.0057	0	0	0
2 ME BUTANE	0.0629	0	0	0
OTHER	0.1501	0	0	0

TOTALS:	1.0705

* Emission Speciation based on EPA AP-42 Profile No. 1208 (for crude oil gathering tanks)

Total Methane Emissions	0	lb/hr	0	tpy
Total Ethane Emissions	0	lb/hr	0	tpy
Total NM/NE Emissions	0	lb/hr	0	tpy

Pneumatic Pumps

Description:	Pneumatic Transfer Pump

Source ID:	24

Date:	1/5/2005

Pump Data	
Manufacturer	Wilden
Model	M4
Volume Gas (cuft/min)	60
Gas Specific Gravity	0.603
Air Density (lb/cu-ft)	0.078
Discharge Rate (gpm)	na

Location of stack or vent		
UTM Zone	15	
Horizontal	500.725	kmE
Vertical	3287.581	kmN

Identification	
EID	
EPN	
FIN	
CIN	

Control Efficiency		
Control		
NOx	0	%
CO	0	%
VOC	0	%

Action:	Change

Operating Characteristics	
Normal Operating Time	52
hours/day	1.0
days/week	1.0
weeks/year	52

Facility Data	
Operator	Hilcorp Energy Company
Field Name	Hog Bayou
Site Name	

Gas Speciation	
Compound	Mole %
Nitrogen	0.199
Carbon Dioxide	2.245
Hydrogen Sulfide	0
Methane	92.142
Ethane	3.064
Propane	1.057
I Butane	0.406
N Butane	0.269
I Pentane	0.155
N Pentane	0.093
I Hexane	0.37
N Hexane	0
Benzene	0
Toluene	0
Ethylbenzene	0
Xylene	0
N Heptane	0
Octanes	0
Decanes Plus	0
Total:	100

Various Model Gas Consumption		
Make	Model	cuft/min
Wilden	M1	
Wilden	M2	30
Wilden	M4	60
Wilden	M8	120
Texstream	3700	0.24
Sidewinder	42	4.14
Oberdorfer		30

Pneumatic Pump VOC Emission Speciation Calculation Worksheet

Compound	Mole %	Molecular Weight	Weight of Gas	Weight Fraction	Gas Weight (lb moles)	(lb/hr)	tons/year
NITROGEN	0.199	28.016	0.0558	0.003	171.731658	0.52887	0.01375
CARBON DIOXIDE	2.245	44.01	0.9880	0.055	171.731658	9.37256	0.24369
HYDROGEN SULFIDE	0.000	34.08	0.0000	0.000	171.731658	0.00000	0.00000
METHANE	92.142	16.042	14.7814	0.817	171.731658	140.21900	3.64569
ETHANE	3.064	30.068	0.9213	0.051	171.731658	8.73945	0.22723
PROPANE	1.057	44.094	0.4661	0.026	171.731658	4.42125	0.11495
I-BUTANE	0.406	58.12	0.2360	0.013	171.731658	2.23842	0.05820
N-BUTANE	0.269	58.12	0.1563	0.009	171.731658	1.48309	0.03856
I-PENTANE	0.155	72.146	0.1118	0.006	171.731658	1.06080	0.02758
N-PENTANE	0.093	72.146	0.0671	0.004	171.731658	0.63648	0.01655
I-HEXANE	0.370	86.172	0.3188	0.018	171.731658	3.02454	0.07864
N-HEXANE	0.000	86.172	0.0000	0.000	171.731658	0.00000	0.00000
BENZENE	0.000	78.108	0.0000	0.000	171.731658	0.00000	0.00000
CYCLOHEXANE	0.001	84.156	0.0008	0.000	171.731658	0.00718	0.00019
HEPTANE	0.000	100.198	0.0000	0.000	171.731658	0.00000	0.00000
2,2,4-TMC5	0.000	100.198	0.0000	0.000	171.731658	0.00000	0.00000
TOLUENE	0.000	92.134	0.0000	0.000	171.731658	0.00000	0.00000
OCTANES	0.000	114.224	0.0000	0.000	171.731658	0.00000	0.00000
ETHYL BENZENE	0.000	106.16	0.0000	0.000	171.731658	0.00000	0.00000
XYLENE	0.000	106.16	0.0000	0.000	171.731658	0.00000	0.00000
DECANES PLUS	0.000	142.276	0.0000	0.000	171.731658	0.00000	0.00000
TOTALS:	100.001		18.103	1.0000			

Volume of Gas (cuft/min) = 60
Volume of Gas (cuft/hr) = 3600

lb-moles of Gas per hour = (volume of gas (cu-ft) / 379.5 cu-ft per lb mole) x weight of gas
lb-moles of Gas / hour = 171.73166 lb-moles

Total Methane Emissions	140.21900	lb/hr	3.64569	tpy
Total Ethane Emissions	8.73945	lb/hr	0.22723	tpy
Total NM/NE Emissions	12.87177	lb/hr	0.33467	tpy

Pneumatic Pumps

Description:	Pneumatic Transfer Pump

Source ID:	25

Date:	1/5/2005

Pump Data	
Manufacturer	Wilden
Model	M8
Volume Gas (cuft/min)	120
Gas Specific Gravity	0.603
Air Density (lb/cu-ft)	0.078
Discharge Rate (gpm)	na

Location of stack or vent		
UTM Zone	15	
Horizontal	500.725	kmE
Vertical	3287.581	kmN

Identification	
EID	
EPN	
FIN	
CIN	

Control Efficiency		
Control		
NOx	0	%
CO	0	%
VOC	0	%

Action:	Change

Operating Characteristics	
Normal Operating Time	52
hours/day	1.0
days/week	1.0
weeks/year	52

Facility Data	
Operator	Hilcorp Energy Company
Field Name	Hog Bayou
Site Name	

Gas Speciation	
Compound	Mole %
Nitrogen	0.199
Carbon Dioxide	2.245
Hydrogen Sulfide	0
Methane	92.142
Ethane	3.064
Propane	1.057
I Butane	0.406
N Butane	0.269
I Pentane	0.155
N Pentane	0.093
I Hexane	0.37
N Hexane	0
Benzene	0
Toluene	0
Ethylbenzene	0
Xylene	0
N Heptane	0
Octanes	0
Decanes Plus	0

Total:	100

Various Model Gas Consumption		
Make	Model	cuft/min
Wilden	M1	
Wilden	M2	30
Wilden	M4	60
Wilden	M8	120
Texstream	3700	0.24
Sidewinder	42	4.14
Oberdorfer		30

Pneumatic Pump VOC Emission Speciation Calculation Worksheet

Compound	Mole %	Molecular Weight	Weight of Gas	Weight Fraction	Gas Weight (lb moles)	(lb/hr)	tons/year
NITROGEN	0.199	28.016	0.0558	0.003	343.463316	1.05774	0.02750
CARBON DIOXIDE	2.245	44.01	0.9880	0.055	343.463316	18.74513	0.48737
HYDROGEN SULFIDE	0.000	34.08	0.0000	0.000	343.463316	0.00000	0.00000
METHANE	92.142	16.042	14.7814	0.817	343.463316	280.43800	7.29139
ETHANE	3.064	30.068	0.9213	0.051	343.463316	17.47890	0.45445
PROPANE	1.057	44.094	0.4661	0.026	343.463316	8.84250	0.22991
I-BUTANE	0.406	58.12	0.2360	0.013	343.463316	4.47685	0.11640
N-BUTANE	0.269	58.12	0.1563	0.009	343.463316	2.96619	0.07712
I-PENTANE	0.155	72.146	0.1118	0.006	343.463316	2.12161	0.05516
N-PENTANE	0.093	72.146	0.0671	0.004	343.463316	1.27296	0.03310
I-HEXANE	0.370	86.172	0.3188	0.018	343.463316	6.04907	0.15728
N-HEXANE	0.000	86.172	0.0000	0.000	343.463316	0.00000	0.00000
BENZENE	0.000	78.108	0.0000	0.000	343.463316	0.00000	0.00000
CYCLOHEXANE	0.001	84.156	0.0008	0.000	343.463316	0.01437	0.00037
HEPTANE	0.000	100.198	0.0000	0.000	343.463316	0.00000	0.00000
2,2,4-TMC5	0.000	100.198	0.0000	0.000	343.463316	0.00000	0.00000
TOLUENE	0.000	92.134	0.0000	0.000	343.463316	0.00000	0.00000
OCTANES	0.000	114.224	0.0000	0.000	343.463316	0.00000	0.00000
ETHYL BENZENE	0.000	106.16	0.0000	0.000	343.463316	0.00000	0.00000
XYLENE	0.000	106.16	0.0000	0.000	343.463316	0.00000	0.00000
DECANES PLUS	0.000	142.276	0.0000	0.000	343.463316	0.00000	0.00000
TOTALS:	100.001		18.103	1.0000			

Volume of Gas (cuft/min) = 120
Volume of Gas (cuft/hr) = 7200

lb-moles of Gas per hour = (volume of gas (cu-ft) / 379.5 cu-ft per lb mole) x weight of gas
lb-moles of Gas / hour = 343.46332 lb-moles

Total Methane Emissions	280.43800	lb/hr	7.29139	tpy
Total Ethane Emissions	17.47890	lb/hr	0.45445	tpy
Total NM/NE Emissions	25.74355	lb/hr	0.66933	tpy

Pneumatic Pumps

Description:	Pneumatic Transfer Pump

Source ID:	26

Date:	1/5/2005

Pump Data	
Manufacturer	Wilden
Model	M8
Volume Gas (cuft/min)	120
Gas Specific Gravity	0.603
Air Density (lb/cu-ft)	0.078
Discharge Rate (gpm)	na

Location of stack or vent		
UTM Zone	15	
Horizontal	500.725	kmE
Vertical	3287.581	kmN

Identification	
EID	
EPN	
FIN	
CIN	

Control Efficiency		
Control		
NOx	0	%
CO	0	%
VOC	0	%

Action:	Change

Operating Characteristics	
Normal Operating Time	52
hours/day	1.0
days/week	1.0
weeks/year	52

Facility Data	
Operator	Hilcorp Energy Company
Field Name	Hog Bayou
Site Name	

Gas Speciation	
Compound	Mole %
Nitrogen	0.199
Carbon Dioxide	2.245
Hydrogen Sulfide	0
Methane	92.142
Ethane	3.064
Propane	1.057
I Butane	0.406
N Butane	0.269
I Pentane	0.155
N Pentane	0.093
I Hexane	0.37
N Hexane	0
Benzene	0
Toluene	0
Ethylbenzene	0
Xylene	0
N Heptane	0
Octanes	0
Decanes Plus	0

Total:	100

Various Model Gas Consumption		
Make	Model	cuft/min
Wilden	M1	
Wilden	M2	30
Wilden	M4	60
Wilden	M8	120
Texstream	3700	0.24
Sidewinder	42	4.14
Oberdorfer		30

Pneumatic Pump VOC Emission Speciation Calculation Worksheet

Compound	Mole %	Molecular Weight	Weight of Gas	Weight Fraction	Gas Weight (lb moles)	(lb/hr)	tons/year
NITROGEN	0.199	28.016	0.0558	0.003	343.463316	1.05774	0.02750
CARBON DIOXIDE	2.245	44.01	0.9880	0.055	343.463316	18.74513	0.48737
HYDROGEN SULFIDE	0.000	34.08	0.0000	0.000	343.463316	0.00000	0.00000
METHANE	92.142	16.042	14.7814	0.817	343.463316	280.43800	7.29139
ETHANE	3.064	30.068	0.9213	0.051	343.463316	17.47890	0.45445
PROPANE	1.057	44.094	0.4661	0.026	343.463316	8.84250	0.22991
I-BUTANE	0.406	58.12	0.2360	0.013	343.463316	4.47685	0.11640
N-BUTANE	0.269	58.12	0.1563	0.009	343.463316	2.96619	0.07712
I-PENTANE	0.155	72.146	0.1118	0.006	343.463316	2.12161	0.05516
N-PENTANE	0.093	72.146	0.0671	0.004	343.463316	1.27296	0.03310
I-HEXANE	0.370	86.172	0.3188	0.018	343.463316	6.04907	0.15728
N-HEXANE	0.000	86.172	0.0000	0.000	343.463316	0.00000	0.00000
BENZENE	0.000	78.108	0.0000	0.000	343.463316	0.00000	0.00000
CYCLOHEXANE	0.001	84.156	0.0008	0.000	343.463316	0.01437	0.00037
HEPTANE	0.000	100.198	0.0000	0.000	343.463316	0.00000	0.00000
2,2,4-TMC5	0.000	100.198	0.0000	0.000	343.463316	0.00000	0.00000
TOLUENE	0.000	92.134	0.0000	0.000	343.463316	0.00000	0.00000
OCTANES	0.000	114.224	0.0000	0.000	343.463316	0.00000	0.00000
ETHYL BENZENE	0.000	106.16	0.0000	0.000	343.463316	0.00000	0.00000
XYLENE	0.000	106.16	0.0000	0.000	343.463316	0.00000	0.00000
DECANES PLUS	0.000	142.276	0.0000	0.000	343.463316	0.00000	0.00000
TOTALS:	100.001		18.103	1.0000			

Volume of Gas (cuft/min) = 120
Volume of Gas (cuft/hr) = 7200

lb-moles of Gas per hour = (volume of gas (cu-ft) / 379.5 cu-ft per lb mole) x weight of gas
lb-moles of Gas / hour = 343.46332 lb-moles

Total Methane Emissions	280.43800	lb/hr	7.29139	tpy
Total Ethane Emissions	17.47890	lb/hr	0.45445	tpy
Total NM/NE Emissions	25.74355	lb/hr	0.66933	tpy

Pneumatic Pumps

Description:	Chemical Pump

Source ID:	27

Date:	1/5/2005

Pump Data	
Manufacturer	uk
Model	uk
Volume Gas (cuft/min)	0.24
Gas Specific Gravity	0.603
Air Density (lb/cu-ft)	0.078
Discharge Rate (gpm)	na

Location of stack or vent		
UTM Zone	15	
Horizontal	500.725	kmE
Vertical	3287.581	kmN

Identification	
EID	
EPN	
FIN	
CIN	

Control Efficiency		
Control		
NOx	0	%
CO	0	%
VOC	0	%

Action:	Change

Operating Characteristics	
Normal Operating Time	8760
hours/day	24.0
days/week	7.0
weeks/year	52

Facility Data	
Operator	Hilcorp Energy Company
Field Name	Hog Bayou
Site Name	

Gas Speciation	
Compound	Mole %
Nitrogen	0.199
Carbon Dioxide	2.245
Hydrogen Sulfide	0
Methane	92.142
Ethane	3.064
Propane	1.057
I Butane	0.406
N Butane	0.269
I Pentane	0.155
N Pentane	0.093
I Hexane	0.37
N Hexane	0
Benzene	0
Toluene	0
Ethylbenzene	0
Xylene	0
N Heptane	0
Octanes	0
Decanes Plus	0
Total:	100

Various Model Gas Consumption		
Make	Model	cuft/min
Wilden	M1	
Wilden	M2	30
Wilden	M4	60
Wilden	M8	120
Texstream	3700	0.24
Sidewinder	42	4.14
Oberdorfer		30

Pneumatic Pump VOC Emission Speciation Calculation Worksheet

Compound	Mole %	Molecular Weight	Weight of Gas	Weight Fraction	Gas Weight (lb moles)	(lb/hr)	tons/year
NITROGEN	0.199	28.016	0.0558	0.003	0.68692663	0.00212	0.00927
CARBON DIOXIDE	2.245	44.01	0.9880	0.055	0.68692663	0.03749	0.16420
HYDROGEN SULFIDE	0.000	34.08	0.0000	0.000	0.68692663	0.00000	0.00000
METHANE	92.142	16.042	14.7814	0.817	0.68692663	0.56088	2.45650
ETHANE	3.064	30.068	0.9213	0.051	0.68692663	0.03496	0.15311
PROPANE	1.057	44.094	0.4661	0.026	0.68692663	0.01769	0.07746
I-BUTANE	0.406	58.12	0.2360	0.013	0.68692663	0.00895	0.03922
N-BUTANE	0.269	58.12	0.1563	0.009	0.68692663	0.00593	0.02598
I-PENTANE	0.155	72.146	0.1118	0.006	0.68692663	0.00424	0.01858
N-PENTANE	0.093	72.146	0.0671	0.004	0.68692663	0.00255	0.01115
I-HEXANE	0.370	86.172	0.3188	0.018	0.68692663	0.01210	0.05299
N-HEXANE	0.000	86.172	0.0000	0.000	0.68692663	0.00000	0.00000
BENZENE	0.000	78.108	0.0000	0.000	0.68692663	0.00000	0.00000
CYCLOHEXANE	0.001	84.156	0.0008	0.000	0.68692663	0.00003	0.00013
HEPTANE	0.000	100.198	0.0000	0.000	0.68692663	0.00000	0.00000
2,2,4-TMC5	0.000	100.198	0.0000	0.000	0.68692663	0.00000	0.00000
TOLUENE	0.000	92.134	0.0000	0.000	0.68692663	0.00000	0.00000
OCTANES	0.000	114.224	0.0000	0.000	0.68692663	0.00000	0.00000
ETHYL BENZENE	0.000	106.16	0.0000	0.000	0.68692663	0.00000	0.00000
XYLENE	0.000	106.16	0.0000	0.000	0.68692663	0.00000	0.00000
DECANES PLUS	0.000	142.276	0.0000	0.000	0.68692663	0.00000	0.00000

TOTALS:	100.001	18.103	1.0000

Volume of Gas (cuft/min) = 0.24
Volume of Gas (cuft/hr) = 14.4

lb-moles of Gas per hour = (volume of gas (cu-ft) / 379.5 cu-ft per lb mole) x weight of gas
lb-moles of Gas / hour = 0.6869266 lb-moles

Total Methane Emissions	0.56088	lb/hr	2.45650	tpy
Total Ethane Emissions	0.03496	lb/hr	0.15311	tpy
Total NM/NE Emissions	0.05149	lb/hr	0.22550	tpy

Pneumatic Pumps

Description:	Chemical Pump

Source ID:	28

Date:	1/5/2005

Pump Data	
Manufacturer	uk
Model	uk
Volume Gas (cuft/min)	0.24
Gas Specific Gravity	0.603
Air Density (lb/cu-ft)	0.078
Discharge Rate (gpm)	na

Location of stack or vent		
UTM Zone	15	
Horizontal	500.725	kmE
Vertical	3287.581	kmN

Identification	
EID	
EPN	
FIN	
CIN	

Control Efficiency		
Control		
NOx	0	%
CO	0	%
VOC	0	%

Action:	Change

Operating Characteristics	
Normal Operating Time	8760
hours/day	24.0
days/week	7.0
weeks/year	52

Facility Data	
Operator	Hilcorp Energy Company
Field Name	Hog Bayou
Site Name	

Gas Speciation	
Compound	Mole %
Nitrogen	0.199
Carbon Dioxide	2.245
Hydrogen Sulfide	0
Methane	92.142
Ethane	3.064
Propane	1.057
I Butane	0.406
N Butane	0.269
I Pentane	0.155
N Pentane	0.093
I Hexane	0.37
N Hexane	0
Benzene	0
Toluene	0
Ethylbenzene	0
Xylene	0
N Heptane	0
Octanes	0
Decanes Plus	0
Total:	100

Various Model Gas Consumption		
Make	Model	cuft/min
Wilden	M1	
Wilden	M2	30
Wilden	M4	60
Wilden	M8	120
Texstream	3700	0.24
Sidewinder	42	4.14
Oberdorfer		30

Pneumatic Pump VOC Emission Speciation Calculation Worksheet

Compound	Mole %	Molecular Weight	Weight of Gas	Weight Fraction	Gas Weight (lb moles)	(lb/hr)	tons/year
NITROGEN	0.199	28.016	0.0558	0.003	0.68692663	0.00212	0.00927
CARBON DIOXIDE	2.245	44.01	0.9880	0.055	0.68692663	0.03749	0.16420
HYDROGEN SULFIDE	0.000	34.08	0.0000	0.000	0.68692663	0.00000	0.00000
METHANE	92.142	16.042	14.7814	0.817	0.68692663	0.56088	2.45650
ETHANE	3.064	30.068	0.9213	0.051	0.68692663	0.03496	0.15311
PROPANE	1.057	44.094	0.4661	0.026	0.68692663	0.01769	0.07746
I-BUTANE	0.406	58.12	0.2360	0.013	0.68692663	0.00895	0.03922
N-BUTANE	0.269	58.12	0.1563	0.009	0.68692663	0.00593	0.02598
I-PENTANE	0.155	72.146	0.1118	0.006	0.68692663	0.00424	0.01858
N-PENTANE	0.093	72.146	0.0671	0.004	0.68692663	0.00255	0.01115
I-HEXANE	0.370	86.172	0.3188	0.018	0.68692663	0.01210	0.05299
N-HEXANE	0.000	86.172	0.0000	0.000	0.68692663	0.00000	0.00000
BENZENE	0.000	78.108	0.0000	0.000	0.68692663	0.00000	0.00000
CYCLOHEXANE	0.001	84.156	0.0008	0.000	0.68692663	0.00003	0.00013
HEPTANE	0.000	100.198	0.0000	0.000	0.68692663	0.00000	0.00000
2,2,4-TMC5	0.000	100.198	0.0000	0.000	0.68692663	0.00000	0.00000
TOLUENE	0.000	92.134	0.0000	0.000	0.68692663	0.00000	0.00000
OCTANES	0.000	114.224	0.0000	0.000	0.68692663	0.00000	0.00000
ETHYL BENZENE	0.000	106.16	0.0000	0.000	0.68692663	0.00000	0.00000
XYLENE	0.000	106.16	0.0000	0.000	0.68692663	0.00000	0.00000
DECANES PLUS	0.000	142.276	0.0000	0.000	0.68692663	0.00000	0.00000
TOTALS:	100.001		18.103	1.0000			

Volume of Gas (cuft/min) = 0.24
Volume of Gas (cuft/hr) = 14.4

lb-moles of Gas per hour = (volume of gas (cu-ft) / 379.5 cu-ft per lb mole) x weight of gas
lb-moles of Gas / hour = 0.6869266 lb-moles

Total Methane Emissions	0.56088	lb/hr	2.45650	tpy
Total Ethane Emissions	0.03496	lb/hr	0.15311	tpy
Total NM/NE Emissions	0.05149	lb/hr	0.22550	tpy

Pneumatic Pumps

Description:	Chemical Pump

Source ID:	29

Date:	1/5/2005

Pump Data	
Manufacturer	uk
Model	uk
Volume Gas (cuft/min)	0.24
Gas Specific Gravity	0.603
Air Density (lb/cu-ft)	0.078
Discharge Rate (gpm)	na

Location of stack or vent		
UTM Zone	15	
Horizontal	500.725	kmE
Vertical	3287.581	kmN

Identification	
EID	
EPN	
FIN	
CIN	

Control Efficiency		
Control		
NOx	0	%
CO	0	%
VOC	0	%

Action:	Change

Operating Characteristics	
Normal Operating Time	8760
hours/day	24.0
days/week	7.0
weeks/year	52

Facility Data	
Operator	Hilcorp Energy Company
Field Name	Hog Bayou
Site Name	

Gas Speciation	
Compound	Mole %
Nitrogen	0.199
Carbon Dioxide	2.245
Hydrogen Sulfide	0
Methane	92.142
Ethane	3.064
Propane	1.057
I Butane	0.406
N Butane	0.269
I Pentane	0.155
N Pentane	0.093
I Hexane	0.37
N Hexane	0
Benzene	0
Toluene	0
Ethylbenzene	0
Xylene	0
N Heptane	0
Octanes	0
Decanes Plus	0
Total:	100

Various Model Gas Consumption		
Make	Model	cuft/min
Wilden	M1	
Wilden	M2	30
Wilden	M4	60
Wilden	M8	120
Texstream	3700	0.24
Sidewinder	42	4.14
Oberdorfer		30

Pneumatic Pump VOC Emission Speciation Calculation Worksheet

Compound	Mole %	Molecular Weight	Weight of Gas	Weight Fraction	Gas Weight (lb moles)	(lb/hr)	tons/year
NITROGEN	0.199	28.016	0.0558	0.003	0.68692663	0.00212	0.00927
CARBON DIOXIDE	2.245	44.01	0.9880	0.055	0.68692663	0.03749	0.16420
HYDROGEN SULFIDE	0.000	34.08	0.0000	0.000	0.68692663	0.00000	0.00000
METHANE	92.142	16.042	14.7814	0.817	0.68692663	0.56088	2.45650
ETHANE	3.064	30.068	0.9213	0.051	0.68692663	0.03496	0.15311
PROPANE	1.057	44.094	0.4661	0.026	0.68692663	0.01769	0.07746
I-BUTANE	0.406	58.12	0.2360	0.013	0.68692663	0.00895	0.03922
N-BUTANE	0.269	58.12	0.1563	0.009	0.68692663	0.00593	0.02598
I-PENTANE	0.155	72.146	0.1118	0.006	0.68692663	0.00424	0.01858
N-PENTANE	0.093	72.146	0.0671	0.004	0.68692663	0.00255	0.01115
I-HEXANE	0.370	86.172	0.3188	0.018	0.68692663	0.01210	0.05299
N-HEXANE	0.000	86.172	0.0000	0.000	0.68692663	0.00000	0.00000
BENZENE	0.000	78.108	0.0000	0.000	0.68692663	0.00000	0.00000
CYCLOHEXANE	0.001	84.156	0.0008	0.000	0.68692663	0.00003	0.00013
HEPTANE	0.000	100.198	0.0000	0.000	0.68692663	0.00000	0.00000
2,2,4-TMC5	0.000	100.198	0.0000	0.000	0.68692663	0.00000	0.00000
TOLUENE	0.000	92.134	0.0000	0.000	0.68692663	0.00000	0.00000
OCTANES	0.000	114.224	0.0000	0.000	0.68692663	0.00000	0.00000
ETHYL BENZENE	0.000	106.16	0.0000	0.000	0.68692663	0.00000	0.00000
XYLENE	0.000	106.16	0.0000	0.000	0.68692663	0.00000	0.00000
DECANES PLUS	0.000	142.276	0.0000	0.000	0.68692663	0.00000	0.00000
TOTALS:	100.001		18.103	1.0000			

Volume of Gas (cuft/min) = 0.24
Volume of Gas (cuft/hr) = 14.4

lb-moles of Gas per hour = (volume of gas (cu-ft) / 379.5 cu-ft per lb mole) x weight of gas
lb-moles of Gas / hour = 0.6869266 lb-moles

Total Methane Emissions	0.56088	lb/hr	2.45650	tpy
Total Ethane Emissions	0.03496	lb/hr	0.15311	tpy
Total NM/NE Emissions	0.05149	lb/hr	0.22550	tpy

Natural Gas Fired Stationary Reciprocating Internal Combustion And Turbine Engine Emission Calculation Worksheet

Description:	Compressor Engine

Source ID:	COMP1

Date:	9/20/2004

Engine Data	
Manufacturer	Caterpillar
Serial Number	
Model Number	G 3516 TALE
Horsepower Rating	1340
Horsepower Utilized	1340
Eng. Type (2/4 cycle)	4
Rich or Lean Burn	Lean
Controls (yes or no)	no
Engine Load (%)	100

Location of stack or vent		
UTM Zone	15	
Horizontal	500.725	kmE
Vertical	3287.581	kmN

Identification	
EID	
EPN	
FIN	
CIN	

Control Efficiency		
Control		
NOx	0	%
CO	0	%
VOC	0	%

Common Standards
Fuel Use: 7.143 scf/hp-hr
Fuel Gas Sulfur:3.33 ppm

Action:	Add

Fuel Data	
Heat input (mmbtu/hr)	10.7
Heat input (btu/hp-hr)	8000
Heat content (btu/scf)	1015
Fuel type	nat gas
Fuel use (mcf/hour)	10.561576
Fuel use (mcf/day)	253.47783

Stack and Discharge Physical Characteristics		
Height above grade	20	feet
Diameter at discharge	1.0	feet
Area of stack	0.79	ft ^2
Stack exit temperature	855	deg F
Exhaust Flow	2981	acfm

Operating Characteristics		
Continuous (yes/no)	yes	
Normal Operating Time	8760	
hours/day	24	
days/week	7	
weeks/year	52	52.145

Facility Data	
Operator	Hilcorp Energy Company
Field Name	Hogg Bayou
Site Name	
Site Operator	
Rental Company	

Emission Factors Utilized

Pollutant	Factor	Units	
PM	0.0000771	lb/mmbtu	ap-42
SOx	0.00185	gm/bhp-hr	ap-42
NOx	1.5	gm/bhp-hr	manuf
CO	1.9	gm/bhp-hr	manuf
VOC	0.09	gm/bhp-hr	manuf
Frmldhyd.	0.1683	gm/bhp-hr	ap-42
Methane			

AP-42 and GRID-HAPCalc Air Emission Computation Factors

Equipment	Methane	PM	SOx	NOx	CO	VOC	Formaldehyde	Reference
		lb/mmbtu	gm/bhp-hr	gm/bhp-hr	gm/bhp-hr	gm/bhp-hr	gm/bhp-hr	GRID-HAPCalc V1
NG Turbines			0.00247	1.3	0.83	0.01	0.0159	AP42 3.2-1 & 3.1-1
NG 2-cycle lean burn		0.0384	0.00185	10.9	1.5	0.43	0.2432	AP42 3.2-1
NG 4-cycle lean burn		0.0000771	0.00185	11.8	1.6	0.72	0.1683	AP42 3.2-1
NG 4-cycle rich burn		0.0095	0.00185	10	8.6	0.14	0.0381	AP42 3.2-1

Formaldehyde emission factors from GRID-HAPCalc Version 1, for gas fired engines.

Emission Calculation Sheet

COMP1

Emission Factors		
Pollutant	Factor	Unit
NOx	1.5	gm/bhp-hr
CO	1.9	gm/bhp-hr
VOC	0.09	gm/bhp-hr
PM	0.0000771	lb/mmbtu
SO2	0.00185	gm/bhp-hr
Frmldhyd.	0.1683	gm/bhp-hr

Process Air Data: Air/Fuel Ratio (lb/lb)

Fuel Gas Basis of Heating Value for Firing Capacity (LHV/HHV)

LHV = 927 HHV =

* Horsepower (hp) is the same as break horsepower (bhp)

* All calculations are based on the standard conditions of 60 def F and 1 atm

Fuel Flow Rate Calculations

Fuel Flow= 1340 (hp) x 8000 (btu/hp-hr) / 1015 (btu/scf fuel) = 10561.58 scf/hr = 253.4778 mcfd

Exhaust Stack Flow Calculations

Stack Exhaust Flow = 2981 acfm

10.53 flue gas/fuel gas

Stack Velocity = Exhaust Flow/(Area X 60 sec) = 2981 / 0.79 / min / 60 = 62.86244 ft/sec

Emission Rate Calculations

lb/hr = # hp / # gms / hp-hr / load factor / lb / 454 gms

tons/year = # hp / # gms / hp-hr / load factor / lb / 454 gms / ton / 2000 lb / hr / yr

	# hp	# gms / hp-hr	load factor	lb / 454 gm		lb/hr		tons/yr
NOx =	1340	1.5	1	lb / 454 gm	=	4.427 lb/hr	=	19.392 tons/yr
CO =	1340	1.9	1	lb / 454 gm	=	5.608 lb/hr	=	24.564 tons/yr
VOC =	1340	0.09	1	lb / 454 gm	=	0.266 lb/hr	=	1.164 tons/yr
SO2 =	1340	0.00185	1	lb / 454 gm	=	0.005 lb/hr	=	0.024 tons/yr
PM-10 =	10.72	0.0000771	(Formula in lb/mmbtu)		=	0.001 lb/hr	=	0.004 tons/yr
Frmldhyd. =	1340	0.1683	1	lb / 454 gm	=	0.497 lb/hr	=	2.176 tons/yr

Properties Used in Emission Inventories							
Engine Design Capacity	=	1340.00	8000.00	1/1000000	=	10.72	MM Btu/hr
Annual Process Rate	=	10561.58	8760.36	1/1000000	=	92.52	MM scf/yr
Percentage of Max. Emissions Potential	=	1.00	8760	1/8760	=	100	%

MIRATECH Emissions Control Equipment Specification Summary

Reference: CDM Unit 03-154 Project:

Engine Data

# of Engines:	1
Engine Operation:	Gas Compression
Engine Make:	Caterpillar
Engine Model:	G3516 TALE
Power Output:	1340 bhp
Fuel:	Natural Gas
Design Exhaust Temp:	855 F
Design Exhaust Flow Rate:	13,292 lb/hr
Lubrication Oil:	0.6 wt% sulfated ash or less

Catalytic Converter System Data

Catalytic Converter Model:	MCS-30Y3021-12-HSG (housing only; no catalyst ir
Inlet / Outlet Pipe Size:	12 inches
Overall Length:	102 inches
Diameter:	30 inches
Weight (including catalyst):	968 lbs
Converter Pressure Loss:	5.57 Inches of WC (with catalyst element installed)
Sound Attenuation:	25-30 dBA
Catalyst Section Internals:	304 SS
Shell / Body Constructions:	Carbon Steel
Inlet / Outlet Connection:	Standard 125# ANSI Bolt Pattern Flanges - FF
Instrumentation Ports:	1 inlet / 1 outlet / 2 catalyst (1/2" NPT)
Oxygen Sensor Ports:	1 inlet / 1 outlet (18 mm)
Operation Temperature Limits:	750 - 1,250 degrees F (inlet); 1350 degrees F (outlet

Emission Requirements

Exhaust Gases	Engine Outputs (g/ bhp-hr)	Reduction (%)	Converter Outputs (g/ bhp-hr)
NOx	1.50	0%	1.50
CO	1.90	TBD	TBD
NMHC	0.46	TBD	TBD
CH2O	0.40	TBD	TBD
PM10	0.05	0%	0.05
Oxygen	8.30%		

 Copyright 2003, all rights reserved

Natural Gas Fired Stationary Reciprocating Internal Combustion And Turbine Engine Emission Calculation Worksheet

Description:	Compressor Engine

Source ID:	COMP3

Date:	1/5/2005

Engine Data	
Manufacturer	Caterpillar
Serial Number	
Model Number	3606
Horsepower Rating	1775
Horsepower Utilized	1775
Eng. Type (2/4 cycle)	4
Rich or Lean Burn	Lean
Controls (yes or no)	no
Engine Load (%)	100

Location of stack or vent		
UTM Zone	15	
Horizontal	500.725	kmE
Vertical	3287.581	kmN

Identification	
EID	
EPN	
FIN	
CIN	

Control Efficiency		
Control		
NOx	0	%
CO	0	%
VOC	0	%

Common Standards
Fuel Use: 7.143 scf/hp-hr
Fuel Gas Sulfur:3.33 ppm

Action:	Add

Fuel Data	
Heat input (mmbtu/hr)	11.8
Heat input (btu/hp-hr)	6620
Heat content (btu/scf)	1015
Fuel type	nat gas
Fuel use (mcf/hour)	11.576847
Fuel use (mcf/day)	277.84433

Stack and Discharge Physical Characteristics		
Height above grade	20	feet
Diameter at discharge	1.0	feet
Area of stack	0.79	ft ^2
Stack exit temperature	867	deg F
Exhaust Flow	12238	acfm

Operating Characteristics		
Continuous (yes/no)	yes	
Normal Operating Time	8760	
hours/day	24	
days/week	7	
weeks/year	52	52.145

Facility Data	
Operator	Hilcorp Energy Company
Field Name	Hogg Bayou
Site Name	
Site Operator	
Rental Company	

Emission Factors Utilized

Pollutant	Factor	Units	
PM	0.0000771	lb/mmbtu	ap-42
SOx	0.00185	gm/bhp-hr	ap-42
NOx	0.7	gm/bhp-hr	manuf
CO	2.5	gm/bhp-hr	manuf
VOC	0.72	gm/bhp-hr	ap-42
Frmldhyd.	0.1683	gm/bhp-hr	ap-42
Methane			

AP-42 and GRID-HAPCalc Air Emission Computation Factors

Equipment	Methane	PM	SOx	NOx	CO	VOC	Formaldehyde	Reference
		lb/mmbtu	gm/bhp-hr	gm/bhp-hr	gm/bhp-hr	gm/bhp-hr	gm/bhp-hr	GRID-HAPCalc V1
NG Turbines			0.00247	1.3	0.83	0.01	0.0159	AP42 3.2-1 & 3.1-1
NG 2-cycle lean burn		0.0384	0.00185	10.9	1.5	0.43	0.2432	AP42 3.2-1
NG 4-cycle lean burn		0.0000771	0.00185	11.8	1.6	0.72	0.1683	AP42 3.2-1
NG 4-cycle rich burn		0.0095	0.00185	10	8.6	0.14	0.0381	AP42 3.2-1

Formaldehyde emission factors from GRID-HAPCalc Version 1, for gas fired engines.

Emission Calculation Sheet

COMP3

Emission Factors		
Pollutant	Factor	Unit
NOx	0.7	gm/bhp-hr
CO	2.5	gm/bhp-hr
VOC	0.72	gm/bhp-hr
PM	0.0000771	lb/mmbtu
SO2	0.00185	gm/bhp-hr
Frmldhyd.	0.1683	gm/bhp-hr

Process Air Data: Air/Fuel Ratio (lb/lb)

Fuel Gas Basis of Heating Value for Firing Capacity (LHV/HHV)

LHV = 927 HHV =

* Horsepower (hp) is the same as break horsepower (bhp)

* All calculations are based on the standard conditions of 60 def F and 1 atm

Fuel Flow Rate Calculations

$$\text{Fuel Flow} = \frac{1775 \text{ (hp)} \times 6620 \text{ (btu/hp-hr)}}{1015 \text{ (btu/scf fuel)}} = 11576.85 \text{ scf/hr} = 277.8443 \text{ mcfd}$$

Exhaust Stack Flow Calculations

Stack Exhaust Flow = 12238 acfm

10.53 flue gas/fuel gas

$$\text{Stack Velocity} = \text{Exhaust Flow/(Area X 60 sec)} = \frac{12238}{0.79} \cdot \frac{\text{min}}{60} = 258.0713 \text{ ft/sec}$$

Emission Rate Calculations

$$\text{lb/hr} = \frac{\text{\# hp}}{} \cdot \frac{\text{\# gms}}{\text{hp-hr}} \cdot \text{load factor} \cdot \frac{\text{lb}}{454 \text{ gms}}$$

$$\text{tons/year} = \frac{\text{\# hp}}{} \cdot \frac{\text{\# gms}}{\text{hp-hr}} \cdot \text{load factor} \cdot \frac{\text{lb}}{454 \text{ gms}} \cdot \frac{\text{ton}}{2000 \text{ lb}} \cdot \frac{\text{hr}}{\text{yr}}$$

	# hp	# gms / hp-hr	load factor	lb / 454 gms		lb/hr		tons/yr
NOx =	1775	0.7	1	lb / 454 gm	=	2.737 lb/hr	=	11.988 tons/yr
CO =	1775	2.5	1	lb / 454 gm	=	9.774 lb/hr	=	42.813 tons/yr
VOC =	1775	0.72	1	lb / 454 gm	=	2.815 lb/hr	=	12.330 tons/yr
SO2 =	1775	0.00185	1	lb / 454 gm	=	0.007 lb/hr	=	0.032 tons/yr
PM-10 =	11.7505	0.0000771	(Formula in lb/mmbtu)		=	0.001 lb/hr	=	0.004 tons/yr
Frmldhyd. =	1775	0.1683	1	lb / 454 gm	=	0.658 lb/hr	=	2.882 tons/yr

Properties Used in Emission Inventories							
Engine Design Capacity	=	1775.00	6620.00	1/1000000	=	11.75	MM Btu/hr
Annual Process Rate	=	11576.85	8760.36	1/1000000	=	101.42	MM scf/yr
Percentage of Max. Emissions Potential	=	1.00	8760	1/8760	=	100	%

G3606

GAS ENGINE TECHNICAL DATA

CATERPILLAR®

Industrial/Petroleum

01/02

ENGINE SPEED (rpm):	1000	FUEL TYPE:	Nat Gas
COMPRESSION RATIO:	9:1	MIN. FUEL PRESSURE (PSIG):	43
AFTERCOOLER WATER (°F)	129	MIN. RATED METHANE NUMBER:	66
JACKET WATER OUTLET (°F)	190	RATED ALTITUDE @ 77°F (ft):	5000
IGNITION SYSTEM:	CIS/A3	FUEL LHV (BTU/SCF):	905
EXHAUST MANIFOLD:	DRY		

RATING		NOTES	LOAD	100%	75%	50%
ENGINE POWER		(2)	bhp	1775	1331	887
ENGINE EFFICIENCY	(ISO 3046/1)	(1)	%	38.4	36.9	34.4
ENGINE EFFICIENCY	(NOMINAL)	(1)	%	37.5	36.0	33.5

ENGINE DATA						
FUEL CONSUMPTION	(ISO 3046/1)	(1)	BTU/bhp-hr	6620	6903	7406
FUEL CONSUMPTION	(NOMINAL)	(1)	BTU/bhp-hr	6781	7071	7586
AIR FLOW (@ 77°F, 13.9 psia)			ft3/min	4,618	3,753	2,528
AIR MASS FLOW			lb/hr	20,202	15,736	10,599
COMPRESSOR OUTLET PRESSURE			psi (abs)	36.8	28.7	20.6
COMPRESSOR OUTLET TEMPERATURE			°F	300	248	163
INLET MANIFOLD PRESSURE			psi (abs)	35.5	27.7	19.7
INLET MANIFOLD TEMPERATURE			°F	144	140	135
LAMBDA				2.07	2.06	1.94
TIMING			°BTDC	19.7	19.7	19.1
EXHAUST STACK TEMPERATURE			°F	867	891	959
EXHAUST GAS FLOW (@ stack temp, 14.5 psia)			ft3/min	12,238	9,701	6,863
EXHAUST GAS MASS FLOW			lb/hr	20,818	16,217	10,923

EMISSIONS					
NOx (as NO)	(3)	g/bhp-hr	0.7	0.7	0.7
CO	(3)	g/bhp-hr	2.5	2.5	2.5
THC (molecular weight of 15.84)	(3)	g/bhp-hr	6.01	6.21	6.46
NMHC (molecular weight of 15.84)	(3)	g/bhp-hr	0.91	0.94	0.97
EXHAUST OXYGEN		%	12.5	11.6	10.8

ENERGY BALANCE DATA						
FUEL INPUT ENERGY (LHV)	(NOMINAL)	(1)	BTU/min	200,574	156,865	112,194
WORK ENERGY	(NOMINAL)	(2)	BTU/min	75,272	56,454	37,636
HEAT REJ. TO JACKET WATER	(NOMINAL)	(4)	BTU/min	17,921	15,400	12,849
HEAT REJ. TO ATMOSPHERE	(NOMINAL)	(5)	BTU/min	7,020	6,588	6,171
HEAT REJ. TO LUBE OIL	(NOMINAL)	(6)	BTU/min	9,026	8,628	8,415
HEAT REJ. TO EXH. (LHV to 77°F)	(NOMINAL)	(4)	BTU/min	78,044	62,513	45,745
HEAT REJ. TO EXH. (LHV to 350°F)	(NOMINAL)	(4)	BTU/min	47,583	38,803	29,629
HEAT REJ. TO AFTERCOOLER	(NOMINAL)	(7) (8)	BTU/min	13,291	7,281	1,379

CONDITIONS AND DEFINITIONS

ENGINE RATING OBTAINED AND PRESENTED IN ACCORDANCE WITH ISO 3046/1 (STD. REF. CONDITIONS OF 25°C, 100 KPA, 152 m). NO OVERLOAD PERMITTED AT RATING SHOWN. CONSULT ALTITUDE CURVES FOR APPLICATIONS ABOVE MAXIMUM RATED ALTITUDE AND/OR TEMPERATURE.

NOTES

1) FUEL CONSUMPTION TOLERANCE. ISO 3046/1 IS 0, + 5% OF FULL LOAD DATA. NOMINAL IS ± 2.5 % OF FULL LOAD DATA.
2) ENGINE POWER AND WORK ENERGY INCLUDE 2 ENGINE DRIVEN WATER PUMPS.
3) EMISSION DATA SHOWN ARE DRY AND NOT TO EXCEED VALUES.
4) HEAT REJECTION TO JACKET AND EXHAUST TOLERANCE IS ± 10% OF FULL LOAD DATA. (heat rate based on treated water)
5) HEAT REJECTION TO ATMOSPHERE TOLERANCE IS ± 50% OF FULL LOAD DATA. (heat rate based on treated water)
6) HEAT REJECTION TO LUBE OIL TOLERANCE IS ± 20% OF FULL LOAD DATA. (heat rate based on treated water)
7) HEAT REJECTION TO AFTERCOOLER TOLERANCE IS ± 5% OF FULL LOAD DATA. (heat rate based on treated water)
8) TOTAL AFTERCOOLER HEAT = AFTERCOOLER HEAT x ACHRF (heat rate based on treated water)

DM5433-01

G3606

GAS ENGINE TECHNICAL DATA

CATERPILLAR®

FUEL USAGE GUIDE

DERATE FACTOR vs CATERPILLAR METHANE NUMBER

Methane Number	30	35	40	45	50	55	60	65	70>=100
Rating Factor	0.00	0.00	0.00	0.76	0.82	0.87	0.93	0.98	1.00

Minimum Methane Number for Full Rating = 66.3

Fuel System Limit (minimum Wobbe Index) = 1128 BTU/SCF

TOTAL DERATION FACTORS - ALTITUDE & COOLING

AIR TO TURBO (°F)	0	1000	2000	3000	4000	5000	6000	7000	8000	9000	10000	11000	12000
130	0.95	0.91	0.87	0.83	0.79	0.76	0.72	0.69	0.66	0.63	0.60	0.57	0.54
120	1.00	0.96	0.92	0.88	0.84	0.80	0.77	0.73	0.70	0.67	0.63	0.60	0.57
110	1.00	1.00	0.97	0.93	0.89	0.85	0.81	0.78	0.74	0.71	0.67	0.64	0.61
100	1.00	1.00	1.00	0.99	0.94	0.90	0.86	0.82	0.79	0.75	0.71	0.68	0.65
90	1.00	1.00	1.00	1.00	1.00	0.96	0.91	0.87	0.83	0.80	0.76	0.72	0.69
80	1.00	1.00	1.00	1.00	1.00	0.99	0.96	0.92	0.88	0.85	0.81	0.77	0.73
70	1.00	1.00	1.00	1.00	1.00	1.00	0.97	0.94	0.90	0.86	0.83	0.80	0.76
60	1.00	1.00	1.00	1.00	1.00	1.00	0.99	0.95	0.92	0.88	0.85	0.81	0.78
50	1.00	1.00	1.00	1.00	1.00	1.00	1.00	0.97	0.94	0.90	0.86	0.83	0.70

ALTITUDE (FEET ABOVE SEA LEVEL)

AFTERCOOLER HEAT REJECTION FACTORS

AIR TO TURBO (°F)	0	1000	2000	3000	4000	5000	6000	7000	8000	9000	10000	11000	12000
130	1.43	1.49	1.56	1.63	1.70	1.77	1.77	1.77	1.77	1.77	1.77	1.77	1.77
120	1.34	1.40	1.47	1.54	1.61	1.68	1.68	1.68	1.68	1.68	1.68	1.68	1.68
110	1.25	1.32	1.38	1.45	1.52	1.59	1.59	1.59	1.59	1.59	1.59	1.59	1.59
100	1.17	1.23	1.29	1.36	1.43	1.49	1.49	1.49	1.49	1.49	1.49	1.49	1.49
90	1.08	1.14	1.21	1.27	1.34	1.40	1.40	1.40	1.40	1.40	1.40	1.40	1.40
80	1.00	1.06	1.12	1.18	1.25	1.31	1.31	1.31	1.31	1.31	1.31	1.31	1.31
70	1.00	1.00	1.03	1.09	1.15	1.22	1.22	1.22	1.22	1.22	1.22	1.22	1.22
60	1.00	1.00	1.00	1.00	1.06	1.13	1.13	1.13	1.13	1.13	1.13	1.13	1.13
50	1.00	1.00	1.00	1.00	1.00	1.04	1.04	1.04	1.04	1.04	1.04	1.04	1.04

ALTITUDE (FEET ABOVE SEA LEVEL)

MINIMUM SPEED CAPABILITY AT MAX SITE TORQUE (RPM)

AIR TO TURBO (°F)	0	1000	2000	3000	4000	5000	6000	7000	8000	9000	10000	11000	12000
130	760	780	800	850	850	850	850	850	850	850	850	850	850
120	760	770	790	850	850	850	850	850	850	850	850	850	850
110	750	770	780	800	850	850	850	850	850	850	850	850	850
100	750	760	770	790	850	850	850	850	850	850	850	850	850
90	750	750	770	780	800	850	850	850	850	850	850	850	850
80	750	750	760	770	790	850	850	850	850	850	850	850	850
70	750	750	750	770	780	800	850	850	850	850	850	850	850
60	750	750	750	760	770	790	850	850	850	850	850	850	850
50	750	750	750	750	770	780	800	850	850	850	850	850	850

ALTITUDE (FEET ABOVE SEA LEVEL)

ALLOWABLE INERTS IN THE FUEL:
The maximum amount of free inerts in the fuel is limited to 5%.

FUEL SYSTEM LIMIT:
Fuels with a Wobbe index lower than the limit, require a custom fuel system and engine control system mapping from the factory. The Wobbe Index is determined using the Caterpillar Methane Number Calculation program.

FUEL USAGE GUIDE:
This table shows the derate factor required for a given fuel. Note that detonation occurs as the methane number decreases. Methane number is a scale to measure detonation characteristics of various fuels. The methane number of a fuel is determined by using the Caterpillar Methane Number Calculation program.

TOTAL DERATION FACTORS:
This table shows the deration required for various air inlet temperatures and altitudes. Use this information along with the fuel usage guide chart to help determine actual engine power for your site. The total deration factor includes deration due to altitude and ambient temperature, and air inlet manifold temperature deration.

ACTUAL ENGINE RATING:
It is important to note that the Altitude/Temperature deration and the Fuel Usage Guide deration are not cumulative. They are not to be added together. To determine the actual power available, take the lowest rating between the Altitude/Temperature Deration and the Fuel Usage Guide Deration.

EXHAUST STACK TEMPERATURE:
The exhaust stack temperature listed in the technical data is a nominal value with a tolerance = +36°C, -30°C (+63°F, -54°F)

AFTERCOOLER HEAT REJECTION FACTORS:
Aftercooler heat rejection is given for standard conditions of 77°F and 500 ft altitude. To maintain a constant air inlet manifold temperature, as the air to turbo temperature goes up, so must the heat rejection. As altitude increases, the turbocharger must work harder to overcome the lower atmospheric pressure. This increases the amount of heat that must be removed from the inlet air by the aftercooler. Use the aftercooler heat rejection factor to adjust for ambient and altitude conditions. Multiply this factor by the standard aftercooler heat rejection. Failure to properly account for these factors could result in detonation and cause the engine to shutdown or fail.

MINIMUM SPEED CAPABILITY AT MAX SITE TORQUE:
This table shows the minimum allowable engine operating speed for site-specific ratings as determined by the Total Deration Factor chart. The minimum allowable engine operating speed cannot be lowered even if the actual engine power falls below the site-specific rating allowed by the Total Deration Factor chart. Turbocharger compressor surge or damage will result if the engine is operated lower than the minimum allowable speed.

DM5433-01

CATERPILLAR

Gas Petroleum Engine

G3606

1600-1775 bhp
1200-1324 bkW
900-1000 rpm

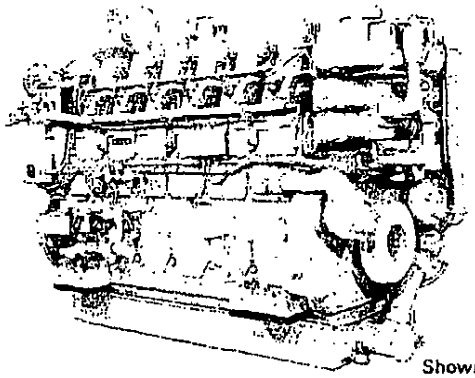

Shown with Optional Equipment

CATERPILLAR® ENGINE SPECIFICATIONS

In-Line 6, 4-Stroke-Cycle
Bore — in (mm) 11.8 (300)
Stroke — in (mm)..... 11.8 (300)
Displacement — cu in (L) 7762 (127.2)
Aspiration..... Turbocharged and Aftercooled
Capacity for Liquids — U.S. gal (L)
Jacket Water Circuit[1]..... 90 (340)
Aftercooler Circuit[1]..... 16 (61)
Lube Oil System (refill) 187 (708)
Package Shipping Weight
(Dry) — lb (kg)..... 34,560 (15 640)

[1]Engine only

FEATURES

- **FULL RANGE OF ATTACHMENTS**
  - Wide range of bolt-on system expansion attachments, factory designed and tested
- **UNMATCHED PRODUCT SUPPORT OFFERED THROUGH WORLDWIDE CATERPILLAR DEALER NETWORK**
  - More than 1,500 dealer outlets
  - Caterpillar factory-trained dealer technicians service every aspect of your petroleum engine
  - 99.7% of parts orders filled within 24 hours — worldwide
  - Caterpillar parts and labor warranty
  - Preventive maintenance agreements available for "repair before failure" options
  - Scheduled Oil Sampling (S•O•S℠) program matches your oil sample against Caterpillar set standards to determine:
    - internal engine component condition
    - presence of unwanted fluids
    - presence of combustion by-products
- **SINGLE-SOURCE SUPPLIER**
  - Caterpillar:
    - casts engine blocks, heads, cylinder liners, and flywheel housings
    - machines critical components
    - assembles complete engine

    Ownership of these manufacturing processes enables Caterpillar to produce high quality, dependable product.
  - Factory-designed systems built at Caterpillar ISO certified facilities
- **G3606**
  - Low emissions
  - Broad operating speed range and ability to burn a wide spectrum of gaseous fuels
  - Caterpillar Advanced Digital Engine Management (ADEM III) control system with detonation-sensitive timing control for individual cylinders
  - Robust diesel strength design provides prolonged life and lower owning and operating costs.
- **TESTING**
  - Prototype testing on every model:
    - proves computer design
    - verifies system torsional stability
    - functionality tests every model
  - Every Caterpillar engine is dynamometer tested under full load to ensure proper engine performance.
- **WEB SITE**
  - For additional information on all your petroleum power requirements, visit www.cat-oilandgas.com.

CATERPILLAR FACILITIES ISO 9001 CERTIFIED

CE

LEHW0812-01

CATERPILLAR

G3606 GAS PETROLEUM ENGINE

FACTORY INSTALLED STANDARD & OPTIONAL EQUIPMENT

SYSTEM	STANDARD	OPTIONAL
Air Inlet	Air cleaner — standard-duty Inlet air adapter	Heavy-duty air cleaner with precleaners Heavy-duty air cleaner with rain protection
Charging System		Charging alternators
Control System	Caterpillar ADEM III control system provides electronic governing integrated with air/fuel ratio control and individual cylinder ignition timing control	Custom control system software is available for non-standard ratings. Software is field programmable using flash memory.
Cooling System	Jacket water pump Jacket water thermostats and housing Aftercooler pump Aftercooler water thermostats and housing Single-stage aftercooler	Expansion tank Flexible connections Jacket water heater
Exhaust System	Dry wrapped exhaust manifolds Vertical outlet adapter	Flexible bellows adapters Exhaust expander Weld flanges
Flywheel/ Flywheel Housing	SAE No. 00 flywheel SAE No. 00 flywheel housing SAE standard rotation	
Fuel System	Gas admission valves with electronically controlled fuel supply pressure	Fuel filter Gas pressure regulator Flexible connection Low energy fuel system Corrosive gas fuel system
Ignition System	ADEM III control system senses individual cylinder detonation and controls individual cylinder timing	CSA certification
Instrumentation	LCD display panel monitors engine parameters and displays diagnostic codes	Remote data monitoring and speed control Compatible with Cat Electronic Technician (ET) and Data View Customer Communication Module (CCM) Display panel deletion is optional
Lube System	Crankcase breathers (top mounted) Oil cooler Oil filter Oil pan drain valve	Air or electric motor-driven prelube Duplex oil filter LH or RH service Lube oil makeup system
Mounting System	Engine mounting feet (six total)	Mounting plates (set of six)
Power Take-Offs		Front stub shafts
Protection	Electronic shutoff system with purge cycle Crankcase explosion relief valves Gas shutoff valve	
Starting System	Air starting system	Air pressure reducing valve Natural gas starting system
General	Paint, Caterpillar yellow Vibration dampers	Engine barring device Damper guard

LEHW0812-01

G3606 GAS PETROLEUM ENGINE

CATERPILLAR

TECHNICAL DATA

G3606 Gas Petroleum Engine — 900-1000 rpm

		DM5435-00	DM5433-00
Engine Power			
@ 100% Load	bhp (bkW)	1600 (1193)	1775 (1324)
@ 75% Load	bhp (bkW)	1200 (895)	1331 (993)
Engine Speed	rpm	900	1000
SCAC Temperature	°F (°C)	129 (54)	129 (54)
Compression Ratio		9.0:1	9.0:1
Emissions*			
NO_x	g/bhp-hr	0.70	0.70
CO	g/bhp-hr	2.50	2.50
Total Hydrocarbons	g/bhp-hr	7.48	6.01
Fuel Consumption			
@ 100% Load	Btu/bhp-hr (MJ/bkW-hr)	6,557 (9.29)	6,620 (9.38)
@ 75% Load	Btu/bhp-hr (MJ/bkW-hr)	6,837 (9.68)	6,903 (9.78)
Heat Balance			
Heat Rejection to Jacket Water			
@ 100% Load	Btu/mn (bkW)	15,101 (266)	17,921 (315)
@ 75% Load	Btu/mn (bkW)	12,946 (228)	15,400 (271)
Heat Rejection to Aftercooler			
@ 100% Load	Btu/mn (bkW)	11,060 (194)	13,291 (234)
@ 75% Load	Btu/mn (bkW)	6,008 (106)	7,281 (128)
Heat Rejection to Exhaust			
@ 100% Load	Btu/mn (bkW)	70,736 (1244)	78,044 (1372)
@ 75% Load	Btu/mn (bkW)	56,622 (996)	62,513 (1098)
Exhaust System			
Exhaust Gas Flow Rate			
@ 100% Load	cfm (m^3/min)	10,978 (314)	12,238 (350)
@ 75% Load	cfm (m^3/min)	8,701 (249)	9,701 (277)
Exhaust Stack Temperature			
@ 100% Load	°F (°C)	850 (454)	867 (464)
@ 75% Load	°F (°C)	873 (467)	891 (477)
Intake System			
Air Inlet Flow Rate			
@ 100% Load	cfm (m^3/min)	4,381 (124)	4,818 (136)
@ 75% Load	cfm (m^3/min)	3,413 (97)	3,763 (106)
Gas Pressure	psi (kPa)	45 (310)	45 (310)

*at 100% load and speed

CATERPILLAR®

G3606 GAS PETROLEUM ENGINE

GAS PETROLEUM ENGINE

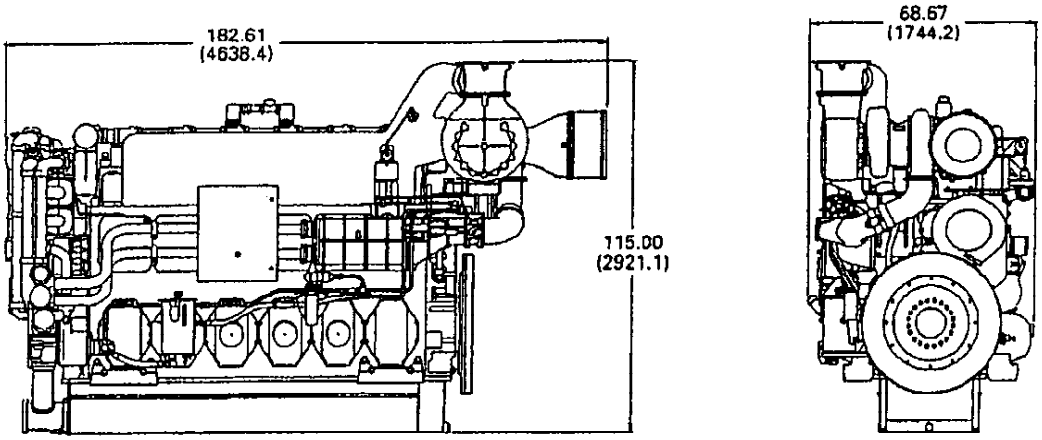

DIMENSIONS		
Length	in (mm)	182.61 (4638.4)
Width	in (mm)	68.67 (1744.2)
Height	in (mm)	115.00 (2921.1)
Shipping Weight	lb (kg)	34,560 (15 640)

Note: General configuration not to be used for installation. See general dimension drawings for detail.

RATING DEFINITIONS AND CONDITIONS

Engine performance is obtained in accordance with SAE J1995, ISO3046/1, BS5514/1, and DIN6271/1 standards.

Transient response data is acquired from an engine/generator combination at normal operating temperature and in accordance with ISO3046/1 standard ambient conditions. Also in accordance with SAE J1995, BS5514/1, and DIN6271/1 standard reference conditions.

Conditions: Power for gas engines is based on fuel having an LHV of 905 Btu/cu ft (33.74 kJ/L) at 29.91 in. Hg (101 kPa) and 59° F (15° C). Fuel rate is based on a cubic meter at 29.61 in. Hg (100 kPa) and 60.1° F (15.6° C). Air flow is based on a cubic foot at 29.61 in. Hg (100 kPa) and 77° F (25° C). Exhaust flow is based on a cubic foot at 29.61 in. Hg (100 kPa) and stack temperature.

TMI Reference No.: DM5435-00, DM5433-00
Materials and specifications are subject to change without notice.
The International System of Units (SI) is used in this publication.
LEHW0812-01 (9-01)
Printed in U.S.A.
©2001 Caterpillar
All rights reserved.

External Combustion Burner Sources: Heater Treaters, Line Heaters, Reboiler Firebox, etc.

Description:	Heater Treater

Source ID:	HT1

Date:	1/5/2005

Burner Data	
Manufacturer	na
Serial Number	na
Model Number	na
Burner Rating (mmbtu/hr)	0.6
Burner Utilized (mmbtu/hr)	0.5
Thermal Efficiency (%)	95
Average Firing Rate (%)	100
Excess Air (%)	10

Location of stack or vent		
UTM Zone	15	
Horizontal	500.725	mE
Vertical	3287.581	mN

Identification	
EID	
EPN	
FIN	
CIN	

Control Efficiency		
Control		
NOx	0	%
CO	0	%
VOC	0	%

Action:	Add

Fuel Data	
Burner Size (mbtu/hr)	500
Fuel Heat of Combustion (btu/scf)	1100
Fuel Type	Natural Gas
Fuel Consumption (scf/hr)	454.5
Fuel Consumption (mcfd)	10.9
AP-42 btu Adjusted Fuel (scf/hr)	490.20

Stack and Discharge Physical Characteristics		
Height above grade	56	feet
Diameter at discharge	0.8	feet
Area of stack	0.54	ft ^2
Stack exit temperature	500	deg F

Operating Characteristics		
Normal Operating Time	8760	
hours/day	24	
days/week	7	
weeks/year	52	52.145

Facility Data	
Operator	Hilcorp Energy Company
Field Name	Hogg Bayou Facility
Site Name	

Emission Factors Utilized		
Pollutant	Factor	Units
PM	7.6	lb/mmscf
SOx	0.6	lb/mmscf
NOx	100	lb/mmscf
CO	84	lb/mmscf
VOC	5.5	lb/mmscf
Methane	2.3	lb/mmscf

AP-42 and GRID-HAPCalc Air Emission Computation Factors								
Equipment	units	PM	SOx	NOx	CO	VOC	Methane	Reference
Commercial (.3 to 10)	lb/mmscf	7.6	0.6	100	84	5.5	2.3	AP-42 Table 1.4-1, -2
Residential Boiler (<.3)	lb/mmscf	7.6	0.6	94	40	11	2.3	AP-42 Table 1.4-1, -2
			AP-42 Factors @ 1020 btu/scf Fuel Gas					

Annual Process Rate =	4.29	mmscf/yr
Percentage of Maximum Emissions Potential =	100	%

Emission Calculation Sheet

Emission Factors		
Pollutant	Factor	Unit
NOx	100	lb/mm scf
CO	84	lb/mm scf
VOC	5.5	lb/mm scf
PM	7.6	lb/mm scf
SO2	0.6	lb/mm scf
Methane	2.3	lb/mm scf

Fuel Gas Basis of Heating Value for Firing Capacity (LHV/HHV)			
LHV =	927	HHV =	

Exhaust Stack Flow Calculations

Stack Exhaust Flow = (scf/hr)(10.53 flue gas/fuel gas)(T + 460/520)(1hr/60 min) = 39956.93 acfm

Stack Velocity = (Exhaust Flow)(Area)(60 sec) = $\frac{39956.93}{0.54} \cdot \frac{\text{min}}{60}$ = 1223.10922 ft/sec

Emission Rate Calculations

lb/hr = $\frac{\text{lb/mmscf} \cdot \text{scf/hr}}{1000000}$ tons/year = $\frac{\text{lb/hr} \cdot \text{operating hrs}}{2000}$

NOx =	$\frac{100 \cdot 490.20}{1000000}$	=	0.049 lb/hr	=	0.215 tpy
CO =	$\frac{84 \cdot 490.20}{1000000}$	=	0.041 lb/hr	=	0.180 tpy
VOC =	$\frac{5.5 \cdot 490.20}{1000000}$	=	0.003 lb/hr	=	0.012 tpy
SO2 =	$\frac{0.6 \cdot 490.20}{1000000}$	=	0.000 lb/hr	=	0.001 tpy
PM	$\frac{7.6 \cdot 490.20}{1000000}$	=	0.004 lb/hr	=	0.016 tpy
Methane	$\frac{2.3 \cdot 490.20}{1000000}$	=	0.001 lb/hr	=	0.005 tpy

VOC Emission Speciation				
Pollutant	Weight %	lb/hr	tpy	Speciation
Methane	56	0.002	0.007	AP-42 Profile
Propane	4	0.000	0.000	AP-42 Profile
n-Butane	9	0.000	0.001	AP-42 Profile
I-Pentane	9	0.000	0.001	AP-42 Profile
n-Pentane	6	0.000	0.001	AP-42 Profile
I-Hexane	1	0.000	0.000	AP-42 Profile
Cyclohaxane	1	0.000	0.000	AP-42 Profile
Formaldhyd.	8	0.000	0.001	AP-42 Profile
Benzene	4	0.000	0.000	AP-42 Profile
Toluene	2	0.000	0.000	AP-42 Profile
Total	100.000	0.003	0.012	

112049

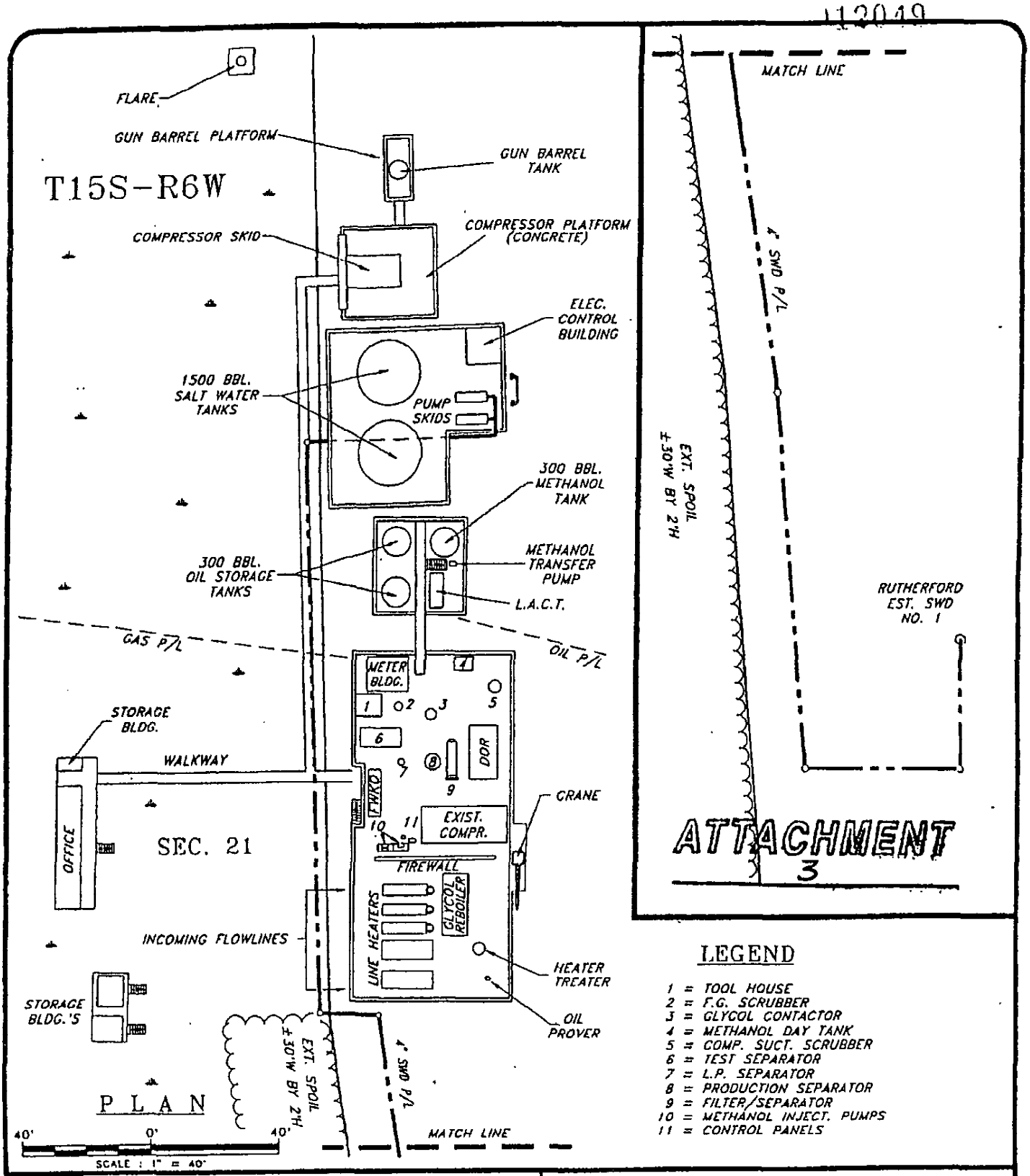

PHILLIPS PETROLEUM COMPANY
EXPLORATION AND PRODUCTION GROUP
101 FEU FOLLET
LAFAYETTE, LOUISIANA 70508

FACILITY DRAWING
RUTHERFORD EST SWD NO. 1
HOG BAYOU FIELD
CAMERON PARISH, LOUISIANA

PREPARED BY C & C TECHNOLOGIES, INC.	JOB # 93-0137	REVISED	DATE 03/03/93

BEST COPY

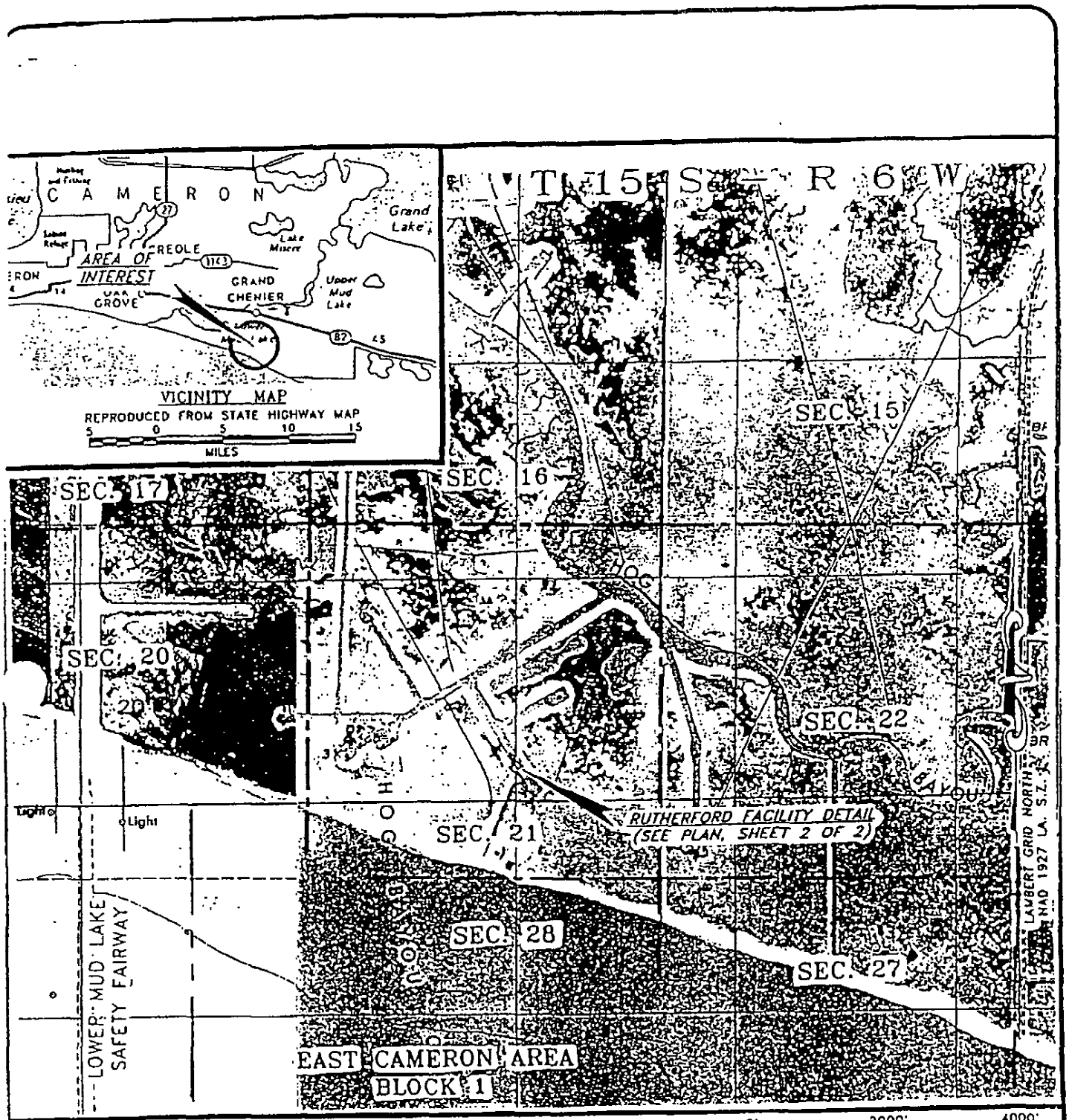

LOCATION MAP

REPRODUCED FROM USGS HOG BAYOU QUADRANGLE

PHILLIPS PETROLEUM COMPANY
EXPLORATION AND PRODUCTION GROUP
101 FEU FOLLET
LAFAYETTE, LOUISIANA 70508

SPCC FACILITY LAYOUT PLANS
HOG BAYOU FIELD
CAMERON PARISH, LOUISIANA

PREPARED BY C & C TECHNOLOGIES, INC. 730 EAST KALISTE SALOOM ROAD LAFAYETTE, LA. 70508 (318) 261-0660	JOB # 96-3637	REVISED	DATE: 12/30/96
	MAP NO. C963637A		SHEET 1 OF 2

original to TOA
copy to [illegible]

For Your Convenience

COPY

We are taking the opportunity of forwarding the attached information without a cover letter in the belief that promptness may be more important to you than formality.

Date: 1/8/07 PER20060001

To: Scott Pierce

From: John Connolly

Re: Hilcorp Energy Company – Hog Bayou Air Permit

DEQ - OES
2007 JAN 10 AM 11: 19

Comments: Scott, Attached are the revised calculations, EIQ's, and summary sheets for the glycol reboiler still vent and the amine vent. The gas dehydrator reboiler still vent is controlled to a condenser and then to the fire box. There is no flash tank on this unit. The amine vent is not controlled. Total EIQ emissions are the sum of the acid gas vent and the flash tank.

Thank you.

John T. Connolly
Energy Research Services, Inc.
19345 Point O Woods Court
Baton Rouge, Louisiana 70809
225-753-4723

Hilcorp Energy Company - Hogg Bayou Facility

Emission Point No.	Description	Operating Rate (Max) or Tank Capacity	Operating Schedule (H/D)	(D/W)	(W/Y)
06	Glycol Reboiler Burner	1.2 mmbtu/hr	24	7	52
08	Oil Storage Tank	300 bbl	24	7	52
09	Oil Storage Tank	300 bbl	24	7	52
10	Oil Storage Tank (standby)	12000 bbl	24	7	52
11	Fugitives	na	24	7	52
15	Glycol Dehydrator Vent	6 mmscfd	24	7	52
16	Flash Gas/Emergency Vent	na	24	7	52
17	Methanol Storage Tank (standby)	300 bbl	24	7	52
18	Methanol Day Tank (standby)	300 gal	24	7	52
20	Saltwater Storage Tank	1500 bbl	24	7	52
21	Saltwater Storage Tank	1500 bbl	24	7	52
22	Sump Tank (emergency)	286 bbl	24	7	52
24	Gas Operated Pump (M4)	60 cuft/min	1	1	52
25	Gas Operated Pump (M8)	120 cuft/min	1	1	52
26	Gas Operated Pump (M8)	120 cuft/min	1	1	52
27	Gas Operated Chemical Pump	.24 cuft/min	24	7	52
28	Gas Operated Chemical Pump	.24 cuft/min	24	7	52
29	Gas Operated Chemical Pump	.24 cuft/min	24	7	52
COMP1	Compressor Engine	1340 hp	24	7	52
COMP3	Compressor Engine	1775 hp	24	7	52
AMINEX	Amine Reboiler Exhaust	1.5 mmbtu/hr	24	7	52
AMINVNT	Amine Reboiler Still Vent	1.3 mmscfd	24	7	52

Insignificant Activities List

01	Line Heater	.5 mmbtu/hr	24	7	52
02	Line Heater	.5 mmbtu/hr	24	7	52
03	Line Heater	.75 mmbtu/hr	24	7	52
04	Line Heater	1.5 mmbtu/hr	24	7	52
05	Line Heater	1.5 mmbtu/hr	24	7	52
07	Heater Treater	.5 mmbtu/hr	24	7	52
HT1	Heater Treater	.5 mmbtu/hr	25	7	52

Emission Worksheet
Site Name: Hilcorp Energy Company - Hogg Bayou Facility

SOURCE	CO	NOx	PM	SO2	Methane	Ethane	Propane	I-Butane	N-Butane	I-Pentane	N-Pentane	Total VOC's	Benzene	Toluene	E-benzene	Xylene	n-Hexane	Formaldehyde	Total Toxic VOC's
06	0.432	0.515	0.039	0.003	0.012							0.028							0
08						3.568	9.936		7.702		2.807	37.596	0.046	0.088	0.035	0.219			0.388
09						3.568	9.936		7.702		2.807	37.596	0.046	0.088	0.035	0.219			0.388
10												0							0
11					37.731							1.435	0.009	0.016	0.001	0.004			0.03
15					0.193	0.019	0.011	0.006	0.005	0.003	0.003	0.104	0.028	0.014	0.005	0.022			0.069
16												0							0
17												0							0
18												0							0
20						0.036	0.099		0.077		0.028	0.376							0
21						0.036	0.099		0.077		0.028	0.376							0
22												0							0
23												0							0
24					3.646	0.227	0.115	0.039	0.039	0.028	0.017	0.335							0
25					7.291	0.454	0.23	0.077	0.077	0.055	0.033	0.669							0
26					7.291	0.454	0.23	0.077	0.077	0.055	0.033	0.669							0
27					2.457	0.153	0.077	0.026	0.026	0.019	0.011	0.226							0
28					2.457	0.153	0.077	0.026	0.026	0.019	0.011	0.226							0
29					2.457	0.153	0.077	0.026	0.026	0.019	0.011	0.226							0
30												0							0
COMP1	24.564	19.392	0.004	0.024								1.164						2.17	2.17
COMP3	42.813	11.988	0.004	0.0332								12.33						2.882	2.882
AMINEX	0.541	0.644	0.049	0.004	0.015							0.035							
AMINVNT					12.144	1.085	0.451	0.008	0.005	0.005	0.003	4.444	3.599	0.173	0.116	0.041			3.929
																			0
TOTALS:	68.35	32.539	0.096	0.0642	75.694	9.906	21.338	0.285	15.839	0.203	5.792	97.835	3.728	0.379	0.192	0.505	0	5.052	9.856

* Figures in tons per year.

5. Summary of Emission Sources
Hilcorp Energy Company - Hogg Bayou Facility

	Annual (TPY)
a. Particulate Matter	0.096
b. Sulfur Dioxides	0.0642
c. Nitrogen Oxides	32.539
d. Carbon Monoxide	68.35
e. Volitale Organic Compounds (Total)	97.835
Propane	21.338
i-Butane	0.285
n-Butane	15.839
i-Pentane	0.203
n-Pentane	5.792
f. Toxic Volitale Organic Compounds (Total)	9.856
(regulated under LAC 33:III Chapter 51)	
Benzene	3.728
Toluene	0.379
Ethylbenzene	0.192
Xylene	0.505
n-Hexane	0
Formaldehyde	5.052
g. Non-regulated VOC's	
Methane	75.694
Ethane	9.906

Department of Environmental Quality
Air Quality Division
P.O. Box 82135
Baton Rouge, LA 70884-2135
(225) 765-0219

LOUISIANA

SINGLE POINT / AREA / VOLUME SOURCE

Emission Inventory Questionnaire (EIQ)

for Air Pollutants

Company Name	Plant location and name	Date of Submittal
Hilcorp Energy Company	Hogg Bayou	12/20/2006

Source ID number	Descriptive name of the equipment serviced by this stack or vent	Approximate location of stack or vent			
15	Glycol Reboiler Still Vent	UTM zone no.	15	Horizontal coordinate	500.725 mE
				Vertical coordinagte	3287.581 mN

Stack and Discharge Physical Characteristics	Height of Stack (feet)	Diameter of Stack (feet)	Stack gas exit temperature (F)	Stack gas flow at process conditions	Stack gas exit velocity	Date of Cons./Mod.	Operating Rate (max) or tank capacity
Change yes/no	na	na	na	na cu ft/min	na ft/sec.	Dec-06	6.00 mmscfd

Fuel	Type of fuel used and heat input		Operating Characteristics	Percent of annual throughput of pollutants through this emission point				Normal operating time of this point			Normal Operating Rate
	Type of fuel	Heat Input (MM BTU/hr)		Dec-Feb	Mar-May	Jun-Aug	Sep-Nov	hrs/day	days/wk	wk/yr	6.00 mmscfd
a	na	na		25	25	25	25	24	7	52	
b											
c											

Air Pollutant Specific Information

Pollutant	Control Equipment Code	Control Equipment Efficiency	Emission Rate Average (lbs/hr)	Emission Rate Maximum (lbs/hr)	Emission Rate Annual (tons/yr)	Emission Estimation Method	Add, Change or Delete	Concentration in gases exiting at stack
Methane	99	98	0.044	0.044	0.193	5	Change	ppm/vol
Ethane	99	98	0.004	0.004	0.019	5	Change	ppm/vol
Total VOC's (incl. those below)	99	98	0.024	0.024	0.104	5	Change	ppm/vol
Propane	99	98	0.002	0.002	0.011	5	Change	ppm/vol
I-Butane	99	98	0.001	0.001	0.006	5	Change	ppm/vol
n-Butane	99	98	0.001	0.001	0.005	5	Change	ppm/vol
I-Pentane	99	98	0.001	0.001	0.003	5	Change	ppm/vol
n-Pentane	99	98	0.001	0.001	0.003	5	Change	ppm/vol
n-Hexane	99	98	0.000	0.000	0.001	5	Change	ppm/vol
Other Hexanes	99	98	0.001	0.001	0.003	5	Change	ppm/vol
Heptanes	99	98	0.001	0.001	0.004	5	Change	ppm/vol
Benzene	99	98	0.006	0.006	0.028	5	Change	ppm/vol
Toluene	99	98	0.003	0.003	0.014	5	Change	ppm/vol
Ethylbenzene	99	98	0.001	0.001	0.005	5	Change	ppm/vol
Xylene	99	98	0.005	0.005	0.022	5	Change	ppm/vol

Gas Dehydrator Still Vent

Description:	**Glycol Reboiler Still Vent**

Source ID:	15

Date:	**12/20/2006**

Reboiler Data	
Dry Gas Rate (mmscfd)	**6.00**
Dry Gas Water (lb/mmscf)	**7**
Glycol Pump	**Kimray**
Pump Speed	**na**
Controls (cnd./burn.)	**yes**

Location of stack or vent		
UTM Zone	**15**	
Horizontal	**500.725**	mE
Vertical	**3287.581**	mN

Identification	
EID	
EPN	
FIN	
CIN	

Control Efficiency		
Control		
NOx	0	%
CO	0	%
VOC	98	%

Action:	**Change**

Operating Characteristics		
Normal Operating Time	8760	
hours/day	**24.0**	
days/week	**7.0**	
weeks/year	**52**	52.145

Facility Data	
Operator	**Hilcorp Energy Company**
Field Name	**Hogg Bayou**
Site Name	

Emissions Data From GRI-GLYCalc Program

Component	lb/hr	tons/year
Methane	0.044	0.1927
Ethane	0.0043	0.0187
Propane	0.0024	0.0105
Isobutane	0.0013	0.0058
n-Butane	0.0011	0.0049
I-Pentane	0.0007	0.0032
n-Pentane	0.0006	0.0025
n-Hexane	0.0003	0.0014
Other Hexanes	0.0007	0.0029
Heptanes	0.0009	0.0038
2,2,4-TMP	0	0
Benzene	0.0063	0.0275
Toluene	0.0031	0.0137
Ethylbenzene	0.0011	0.005
Xylene	0.0051	0.0223
Total HC	0.072	0.3153
Total VOC	0.0237	0.104
Total HAP	0.016	0.07

GRI-GLYCalc VERSION 3.0 - AGGREGATE CALCULATIONS REPORT

Case Name: Hog Bayou
File Name: C:\GLYCALC\HOG.DDF
Date: December 21, 2006

DESCRIPTION:

Description: 6 mmscfd to reboiler
Controlled to condenser and burner
No flash tank.

Annual Hours of Operation: 8760.0 hours/yr

EMISSIONS REPORTS:

CONTROL DEVICE EMISSIONS

Component	lbs/hr	lbs/day	tons/yr
Methane	0.0440	1.056	0.1927
Ethane	0.0043	0.102	0.0187
Propane	0.0024	0.058	0.0105
Isobutane	0.0013	0.032	0.0058
n-Butane	0.0011	0.027	0.0049
Isopentane	0.0007	0.018	0.0032
n-Pentane	0.0006	0.014	0.0025
n-Hexane	0.0003	0.008	0.0014
Cyclohexane	0.0007	0.016	0.0029
Heptanes	0.0009	0.021	0.0038
Benzene	0.0063	0.151	0.0275
Toluene	0.0031	0.075	0.0137
Ethylbenzene	0.0011	0.027	0.0050
Xylenes	0.0051	0.122	0.0223
C8+ Heavies	0.0001	0.002	0.0003
Total Emissions	0.0720	1.728	0.3153
Total Hydrocarbon Emissions	0.0720	1.728	0.3153
Total VOC Emissions	0.0237	0.570	0.1040
Total HAP Emissions	0.0160	0.383	0.0700
Total BTEX Emissions	0.0157	0.376	0.0686

UNCONTROLLED REGENERATOR EMISSIONS

Component	lbs/hr	lbs/day	tons/yr
Methane	4.0068	96.164	17.5500
Ethane	0.3910	9.384	1.7127
Propane	0.2306	5.534	1.0099
Isobutane	0.1349	3.238	0.5909
n-Butane	0.1182	2.836	0.5175

Isopentane	0.0928	2.227	0.4065
n-Pentane	0.0767	1.840	0.3358
n-Hexane	0.0690	1.655	0.3020
Cyclohexane	0.1753	4.208	0.7679
Heptanes	0.3854	9.251	1.6882
Benzene	2.1480	51.553	9.4084
Toluene	3.0823	73.976	13.5006
Ethylbenzene	2.5351	60.842	11.1037
Xylenes	14.6887	352.528	64.3364
C8+ Heavies	8.0925	194.220	35.4451
Total Emissions	36.2273	869.455	158.6755

Total Hydrocarbon Emissions	36.2273	869.455	158.6755
Total VOC Emissions	31.8294	763.906	139.4129
Total HAP Emissions	22.5231	540.554	98.6510
Total BTEX Emissions	22.4541	538.899	98.3490

EQUIPMENT REPORTS:

CONDENSER AND INCINERATOR/FLARE

Condenser Temperature: 96.00 deg. F
Condenser Pressure: 10.00 psia
Condenser Duty: 0.03 MM BTU/hr
Hydrocarbon Recovery: 2.39 bbls/day
Produced Water: 0.70 bbls/day
Ambient Temperature: 80.00 deg. F
Excess Oxygen: 5.00 %
Combustion Efficiency: 98.90 %
Supplemental Fuel Requirement: 2.96e-002 MM BTU/hr

Component	Emitted	Destroyed
Methane	1.10%	98.90%
Ethane	1.09%	98.91%
Propane	1.04%	98.96%
Isobutane	0.99%	99.01%
n-Butane	0.95%	99.05%
Isopentane	0.79%	99.21%
n-Pentane	0.74%	99.26%
n-Hexane	0.46%	99.54%
Cyclohexane	0.37%	99.63%
Heptanes	0.22%	99.78%
Benzene	0.29%	99.71%
Toluene	0.10%	99.90%
Ethylbenzene	0.04%	99.96%
Xylenes	0.03%	99.97%
C8+ Heavies	0.00%	100.00%

ABSORBER

NOTE: Because the Calculated Absorber Stages was below the minimum allowed, GRI-GLYCalc has set the number of Absorber Stages to 1.25 and has calculated a revised Dry Gas Dew Point.

Calculated Absorber Stages: 1.25
Calculated Dry Gas Dew Point: 3.37 lbs. H2O/MMSCF

Temperature: 90.0 deg. F
Pressure: 930.0 psig
Dry Gas Flow Rate: 6.0000 MMSCF/day
Glycol Losses with Dry Gas: 0.0021 lb/hr
Wet Gas Water Content: Saturated
Calculated Wet Gas Water Content: 46.17 lbs. H2O/MMSCF
Specified Lean Glycol Recirc. Ratio: 3.00 gal/lb H2O

Component	Remaining in Dry Gas	Absorbed in Glycol
Water	7.29%	92.71%
Carbon Dioxide	99.87%	0.13%
Nitrogen	99.99%	0.01%
Methane	99.99%	0.01%
Ethane	99.96%	0.04%
Propane	99.94%	0.06%
Isobutane	99.92%	0.08%
n-Butane	99.90%	0.10%
Isopentane	99.90%	0.10%
n-Pentane	99.87%	0.13%
n-Hexane	99.79%	0.21%
Cyclohexane	99.07%	0.93%
Heptanes	99.63%	0.37%
Benzene	92.71%	7.29%
Toluene	89.00%	11.00%
Ethylbenzene	85.54%	14.46%
Xylenes	79.65%	20.35%
C8+ Heavies	98.69%	1.31%

REGENERATOR

No Stripping Gas used in regenerator.

Component	Remaining in Glycol	Distilled Overhead
Water	27.80%	72.20%
Carbon Dioxide	0.00%	100.00%
Nitrogen	0.00%	100.00%

Methane	0.00%	100.00%
Ethane	0.00%	100.00%
Propane	0.00%	100.00%
Isobutane	0.00%	100.00%
n-Butane	0.00%	100.00%
Isopentane	0.39%	99.61%
n-Pentane	0.41%	99.59%
n-Hexane	0.44%	99.56%
Cyclohexane	3.10%	96.90%
Heptanes	0.46%	99.54%
Benzene	4.98%	95.02%
Toluene	7.88%	92.12%
Ethylbenzene	10.37%	89.63%
Xylenes	12.87%	87.13%
C8+ Heavies	11.75%	88.25%

STREAM REPORTS:

WET GAS STREAM

Temperature: 90.00 deg. F
Pressure: 944.70 psia
Flow Rate: 2.50e+005 scfh

Component	Conc. (vol%)	Loading (lb/hr)
Water	9.73e-002	1.16e+001
Carbon Dioxide	2.50e+000	7.26e+002
Nitrogen	2.03e-001	3.75e+001
Methane	9.14e+001	9.67e+003
Ethane	3.07e+000	6.10e+002
Propane	9.31e-001	2.71e+002
Isobutane	3.37e-001	1.29e+002
n-Butane	2.41e-001	9.23e+001
Isopentane	1.50e-001	7.13e+001
n-Pentane	1.03e-001	4.90e+001
n-Hexane	5.09e-002	2.90e+001
Cyclohexane	3.30e-002	1.83e+001
Heptanes	1.48e-001	9.78e+001
Benzene	5.69e-002	2.93e+001
Toluene	4.59e-002	2.79e+001
Ethylbenzene	2.50e-002	1.75e+001
Xylenes	1.03e-001	7.21e+001
C8+ Heavies	5.39e-001	6.06e+002
Total Components	100.00	1.26e+004

DRY GAS STREAM

Temperature: 90.00 deg. F
Pressure: 944.70 psia
Flow Rate: 2.50e+005 scfh

Component	Conc. (vol%)	Loading (lb/hr)
Water	7.10e-003	8.43e-001
Carbon Dioxide	2.50e+000	7.25e+002
Nitrogen	2.03e-001	3.75e+001
Methane	9.15e+001	9.67e+003
Ethane	3.08e+000	6.09e+002
Propane	9.32e-001	2.71e+002
Isobutane	3.37e-001	1.29e+002
n-Butane	2.41e-001	9.22e+001
Isopentane	1.50e-001	7.13e+001
n-Pentane	1.03e-001	4.89e+001
n-Hexane	5.09e-002	2.89e+001
Cyclohexane	3.27e-002	1.81e+001
Heptanes	1.48e-001	9.74e+001
Benzene	5.29e-002	2.72e+001
Toluene	4.10e-002	2.49e+001
Ethylbenzene	2.14e-002	1.50e+001
Xylenes	8.21e-002	5.74e+001
C8+ Heavies	5.33e-001	5.98e+002
Total Components	100.00	1.25e+004

LEAN GLYCOL STREAM

Temperature: 90.00 deg. F
Flow Rate: 4.88e-001 gpm

Component	Conc. (wt%)	Loading (lb/hr)
TEG	9.71e+001	2.66e+002
Water	1.51e+000	4.13e+000
Carbon Dioxide	3.52e-011	9.65e-011
Nitrogen	1.97e-013	5.39e-013
Methane	1.51e-017	4.14e-017
Ethane	3.72e-008	1.02e-007
Propane	2.27e-009	6.22e-009
Isobutane	1.07e-009	2.93e-009
n-Butane	8.29e-010	2.27e-009
Isopentane	1.32e-004	3.63e-004
n-Pentane	1.15e-004	3.14e-004
n-Hexane	1.11e-004	3.04e-004

Cyclohexane	2.05e-003	5.61e-003
Heptanes	6.54e-004	1.79e-003
Benzene	4.11e-002	1.13e-001
Toluene	9.61e-002	2.64e-001
Ethylbenzene	1.07e-001	2.93e-001
Xylenes	7.92e-001	2.17e+000
C8+ Heavies	3.93e-001	1.08e+000
Total Components	100.00	2.74e+002

RICH GLYCOL AND PUMP GAS STREAM

Temperature: 90.00 deg. F
Pressure: 944.70 psia
Flow Rate: 5.93e-001 gpm
NOTE: Stream has more than one phase.

Component	Conc. (wt%)	Loading (lb/hr)
TEG	8.26e+001	2.66e+002
Water	4.61e+000	1.48e+001
Carbon Dioxide	3.64e-001	1.17e+000
Nitrogen	5.02e-003	1.62e-002
Methane	1.24e+000	4.01e+000
Ethane	1.21e-001	3.91e-001
Propane	7.16e-002	2.31e-001
Isobutane	4.19e-002	1.35e-001
n-Butane	3.67e-002	1.18e-001
Isopentane	2.89e-002	9.32e-002
n-Pentane	2.39e-002	7.70e-002
n-Hexane	2.15e-002	6.93e-002
Cyclohexane	5.62e-002	1.81e-001
Heptanes	1.20e-001	3.87e-001
Benzene	7.02e-001	2.26e+000
Toluene	1.04e+000	3.35e+000
Ethylbenzene	8.78e-001	2.83e+000
Xylenes	5.23e+000	1.69e+001
C8+ Heavies	2.85e+000	9.17e+000
Total Components	100.00	3.22e+002

REGENERATOR OVERHEADS STREAM

Temperature: 212.00 deg. F
Pressure: 14.70 psia
Flow Rate: 4.46e+002 scfh

Component	Conc. (vol%)	Loading (lb/hr)

CONDENSER RECOVERED OIL STREAM

Temperature: 96.00 deg. F
Flow Rate: 6.98e-002 gpm

Component	Conc. (wt%)	Loading (lb/hr)
Water	3.32e-002	9.87e-003
Carbon Dioxide	1.96e-002	5.82e-003
Nitrogen	1.52e-004	4.53e-005
Methane	2.38e-002	7.05e-003
Ethane	1.19e-002	3.52e-003
Propane	4.01e-002	1.19e-002
Isobutane	4.62e-002	1.37e-002
n-Butane	5.33e-002	1.58e-002
Isopentane	8.69e-002	2.58e-002
n-Pentane	8.37e-002	2.49e-002
n-Hexane	1.34e-001	3.99e-002
Cyclohexane	3.90e-001	1.16e-001
Heptanes	1.03e+000	3.07e-001
Benzene	5.31e+000	1.58e+000
Toluene	9.42e+000	2.80e+000
Ethylbenzene	8.19e+000	2.43e+000
Xylenes	4.79e+001	1.42e+001
C8+ Heavies	2.72e+001	8.09e+000
Total Components	100.00	2.97e+001

CONDENSER VENT STREAM

Temperature: 96.00 deg. F
Pressure: 10.00 psia
Flow Rate: 1.32e+002 scfh

Component	Conc. (vol%)	Loading (lb/hr)
Water	8.51e+000	5.32e-001
Carbon Dioxide	7.65e+000	1.17e+000
Nitrogen	1.66e-001	1.61e-002
Methane	7.19e+001	4.00e+000
Ethane	3.71e+000	3.87e-001
Propane	1.43e+000	2.19e-001
Isobutane	6.01e-001	1.21e-001
n-Butane	5.07e-001	1.02e-001
Isopentane	2.68e-001	6.70e-002
n-Pentane	2.07e-001	5.18e-002
n-Hexane	9.72e-002	2.91e-002

Cyclohexane	2.04e-001	5.95e-002
Heptanes	2.26e-001	7.86e-002
Benzene	2.11e+000	5.71e-001
Toluene	8.92e-001	2.85e-001
Ethylbenzene	2.80e-001	1.03e-001
Xylenes	1.26e+000	4.64e-001
C8+ Heavies	1.10e-002	6.52e-003
Total Components	100.00	8.26e+000

INCINERATOR OFF GAS STREAM

Temperature: 1000.00 deg. F
Pressure: 14.70 psia
Flow Rate: 1.21e+000 scfh

Component	Conc. (vol%)	Loading (lb/hr)
Methane	8.59e+001	4.40e-002
Ethane	4.44e+000	4.26e-003
Propane	1.71e+000	2.41e-003
Isobutane	7.18e-001	1.33e-003
n-Butane	6.06e-001	1.13e-003
Isopentane	3.20e-001	7.37e-004
n-Pentane	2.47e-001	5.70e-004
n-Hexane	1.16e-001	3.20e-004
Cyclohexane	2.43e-001	6.54e-004
Heptanes	2.70e-001	8.65e-004
Benzene	2.52e+000	6.28e-003
Toluene	1.07e+000	3.14e-003
Ethylbenzene	3.35e-001	1.13e-003
Xylenes	1.50e+000	5.10e-003
C8+ Heavies	1.32e-002	7.17e-005
Total Components	100.00	7.20e-002

LAFAYETTE LABORATORY
500 AMBASSADOR CAFFERY PKWY.
SCOTT, LOUISIANA 70583-1790
PHONE (337) 237-4775
FAX (337) 237-8005

Certificate of Analysis Number: 2006120201-001A

FOR: Hilcorp Energy Company
Mike Schoch
PO Box 61229
Houston TX 77208-1229

CUSTOMER: Hilcorp Energy Company
FIELD : Hog Bayou
LOCATION : S/L 1170-1
SAMPLE POINT: Up Stream Amine Unit
REPORT DATE: 12/20/2006
SAMPLE DATE: 12/19/06 @ 12:00
SAMPLED BY: D. LeMaire
REMARKS1:
REMARKS2:

TYPE: Gas
REPORT: C10+ (GPA Method 2286)
CYLINDER: 2511
PRESSURE: 930
TEMPERATURE: 90

COMPONENT	MOL %	WEIGHT %	GPM's @ 15.025
N2	0.203	0.304	
CO2	2.502	5.877	
METHANE	91.466	78.328	
ETHANE	3.076	4.938	0.839
PROPANE	0.932	2.194	0.262
I-BUTANE	0.337	1.046	0.113
N-BUTANE	0.241	0.747	0.077
I-PENTANE	0.150	0.577	0.056
N-PENTANE	0.103	0.395	0.038
I-HEXANES	0.099	0.454	0.041
N-HEXANE	0.051	0.238	0.021
I-HEPTANES	0.106	0.538	0.045
N-HEPTANE	0.042	0.228	0.020
BENZENE	0.057	0.242	0.016
CYCLOHEXANE	0.033	0.152	0.012
TOLUENE	0.046	0.229	0.016
I-OCTANES	0.124	0.713	0.057
N-OCTANE	0.064	0.393	0.033
*E-BENZENE	0.025	0.143	0.010
*m,o,&p-XYLENE	0.103	0.594	0.041
I-NONANES	0.124	0.848	0.066
N-NONANE	0.055	0.380	0.031
I-DECANES	0.058	0.424	0.032
N-DECANE	0.001	0.009	0.001
I-UNDECANES +	0.002	0.009	0.001
TOTALS	100.000	100.000	1.828

LAFAYETTE LABORATORY
500 AMBASSADOR CAFFERY PKWY.
SCOTT, LOUISIANA 70583-1790
PHONE (337) 237-4775
FAX (337) 237-8005

Certificate of Analysis Number: 2006120201-001A

FOR: Hilcorp Energy Company
Mike Schoch
PO Box 61229
Houston TX 77208-1229

CUSTOMER: Hilcorp Energy Company
FIELD : Hog Bayou
LOCATION : S/L 1170-1
SAMPLE POINT: Up Stream Amine Unit
REPORT DATE: 12/20/2006
SAMPLE DATE: 12/19/06 @ 12:00
SAMPLED BY: D. LeMaire
REMARKS1:
REMARKS2:

TYPE: Gas
REPORT: C6+
CYLINDER: 2511
PRESSURE: 930
TEMPERATURE: 90

COMPONENT	MOL %	WEIGHT %	GPM's @ 15.025
N2	0.203	0.304	
CO2	2.502	5.877	
METHANE	91.466	78.328	
ETHANE	3.076	4.938	0.839
PROPANE	0.932	2.194	0.262
I-BUTANE	0.337	1.046	0.113
N-BUTANE	0.241	0.747	0.077
I-PENTANE	0.150	0.577	0.056
N-PENTANE	0.103	0.395	0.038
HEXANES PLUS	0.990	5.594	0.443
TOTALS	100.000	100.000	1.828

CALCULATED VALUES	TOTAL	C6+	C7+
MOLECULAR WEIGHT	18.733	105.82	109.661
REAL DRY BTU AT 15.025 PSIA, 60 DEG.F	1112.6	5635.0	5788.0
REAL WET BTU AT 15.025 PSIA, 60 DEG.F	1094.5	5539.7	5690.1
RELATIVE DENSITY	0.6478	3.607	3.7275

	C2+	IC5+
GPM's AT 15.025	1.828	0.537

COMPRESSIBILITY FACTOR 0.99720

LAFAYETTE LABORATORY
500 AMBASSADOR CAFFERY PKWY.
SCOTT, LOUISIANA 70583-1790
PHONE (337) 237-4775
FAX (337) 237-8005

Certificate of Analysis Number: 2006120201-001A

FOR: Hilcorp Energy Company
Mike Schoch
PO Box 61229
Houston TX 77208-1229

CUSTOMER: Hilcorp Energy Company
FIELD : Hog Bayou
LOCATION : S/L 1170-1
SAMPLE POINT: Up Stream Amine Uni
REPORT DATE: 12/20/2006
SAMPLE DATE: 12/19/06 @ 12:00
SAMPLED BY: D. LeMaire
REMARKS1:
REMARKS2:

TYPE: Gas
REPORT: C7+
CYLINDER: 2511
PRESSURE: 930
TEMPERATURE: 90

COMPONENT	MOL %	WEIGHT %	GPM's @ 15.025
N2	0.203	0.304	
CO2	2.502	5.877	
METHANE	91.466	78.328	
ETHANE	3.076	4.938	0.839
PROPANE	0.932	2.194	0.262
I-BUTANE	0.337	1.046	0.113
N-BUTANE	0.241	0.747	0.077
I-PENTANE	0.150	0.577	0.056
N-PENTANE	0.103	0.395	0.038
HEXANES	0.150	0.692	0.062
HEPTANES PLUS	0.840	4.902	0.381
TOTALS	100.000	100.000	1.828

CALCULATED VALUES	TOTAL	C6+	C7+
MOLECULAR WEIGHT	18.733	105.82	109.661
REAL DRY BTU AT 15.025 PSIA, 60 DEG.F	1112.6	5635.0	5788.0
REAL WET BTU AT 15.025 PSIA, 60 DEG.F	1094.5	5539.7	5690.1
RELATIVE DENSITY	0.6478	3.607	3.7275

	C2+	IC5+
GPM's AT 15.025	1.828	0.537

COMPRESSIBILITY FACTOR 0.9972

SPL, Inc.
Analysis Request & Chain of Custody Record

SPL Work Order No.: 20061220201

SPL S 50897

Page 1 of 1

Company: Hilcorp Energy Co.

Address: P.O. Box 61229

Houston, TX 77208-1229

Contact: Matt Ballard

Phone/Fax: 337-824-0843

Field/Project: Hog Bayou #L1170-1

Invoice to (company name): Hilcorp

Contact:

Phone/Fax:

Address:

Special Instructions: Email to Hilcorp Mike Schock, Matt Ballard, Llemarieda@AOL.com

* Terms: Cylinders will be rented for $15/cyl. All cylinders checked out are to be returned within 21 days, whether they contain sample or not. Cylinders not returned after 30 days will be considered lost and will be billed at current replacement cost.

Requested TAT

- [x] 24hr*
- [ ] 48hr*
- [ ] 72hr*
- [ ] Standard
- [ ] Other

_____

_____

_____

* Surcharges May Apply

Requested Analysis

Sample ID	Sample Date	Sample Time	Sample Of	Duplica	Compo	Spot	Cylinder Tracking Info * Cylinder #	Date Out	Date In	GID + GAS											Comments
Hog Bayou Wet Gas	12-19-06	12PM	Gas				2511			✓											930# @ 90°

Sampled By-Print Name: Doug Le Maire

Signature: Doug Le Maire

Company Name: D.L. Measurement Svc.

Relinquished By-Print Name: Doug Le Maire Date: 12/19/06 Time: 1400

Signature: Doug Le Maire

Received By-Print Name:

Signature:

Date: Time:

Relinquished By-Print Name: Date: Time:

Signature:

Received By-Print Name:

Signature:

Date: 12/19/06 Time: 1440

- [ ] 8880 Interchange Dr. Houston, TX 77054 (713) 660-0901
- [ ] 9221 Highway 23 Belle Chasse, LA 70037 (504) 391-1337
- [ ] P.O. Box 3079 Laurel, MS 39442 (601) 428-0842
- [x] 500 Ambassador Caffery Pkwy, Scott, LA 70583 (337) 237-4775
- [ ] 1595 US 79 South Carthage, TX 75633 (903) 693-6242
- [ ] 459 Hughes Dr. Traverse City, MI 49686 (616) 947-5777

LDEQ-EDMS Document 35695808, Page 169 of 185

Scott Pierce

From: John Connolly [ersses@cox.net]
Sent: Monday, January 22, 2007 3:14 PM
To: Scott Pierce
Subject: RE: hilcorp - hog bayou

Scott, There is not a control device. The AmineCALC program automatically calculates a 50% control. We do not have controls, so I selected the uncontrolled output data. I noticed the same thing with the program. Let me know if this explanation is acceptable. John

---

From: Scott Pierce [mailto:Scott.Pierce@LA.GOV]
Sent: Monday, January 22, 2007 1:28 PM
To: John Connolly
Subject: RE: hilcorp - hog bayou

I think I see what's going on. I believe you reported the uncontrolled emissions on the EIQ. They come out to 4.45 tpy VOC based on the AmineCALC report, but the controlled emission come out to be 2.23 tpy VOC. Is there a control device or not?

From: John Connolly [mailto:ersses@cox.net]
Sent: Monday, January 22, 2007 1:19 PM
To: Scott Pierce
Subject: hilcorp - hog bayou

Scott, I had to run to fed ex. Let me know what you need on the amine calcs., and I will work on it this afternoon.
John

Energy Research Services, Inc
Shinteaux Environmental Services, Inc.
John T. Connolly
19345 Point O Woods Court
Baton Rouge, Louisiana 70809
225-753-4723
225-753-4661 (fax)
ersses@cox.net

DEQ - OES
2007 JAN 19 PM 1:35

Facsimile Message

To: Scott Pierce
Company: LDEQ – Air Permits
Fax Number: 219-3309
Total Pages: 1
From: John Connolly
Date: 1/18/07

Message: Hilcorp – Hog Bayou

Comments:

The enclosed material is intended for recipient named above, and unless otherwise expressly indicated, is confidential and privileged information. Any dissemination, distribution, or copying of the enclosed materials is prohibited if you receive this transmission in error. Please notify us immediately by telephone at our expense and destroy the enclosed materials. Your cooperation is appreciated.

Department of Environmental Quality
Air Quality Division
P.O. Box 82135
Baton Rouge, LA 70884-2135
(225) 765-0219

LOUISIANA

SINGLE POINT / AREA / VOLUME SOURCE

Emission Inventory Questionnaire (EIQ)

for Air Pollutants

Company Name	Plant location and name	Date of Submittal
Hilcorp Energy Company	Hogg Bayou	1/1/2007

Source ID number	Descriptive name of the equipment serviced by this stack or vent	Approximate location of stack or vent			
		UTM zone no.	15	Horizontal coordinate	500.725 mE
AMINVNT	Amine Reboiler Still Vent			Vertical coordinagte	3287.581 mN

Stack and Discharge Physical Characteristics	Height of Stack (feet)	Diameter of Stack (feet)	Stack gas exit temperature (F)	Stack gas flow at process conditions	Stack gas exit velocity	Date of Cons./Mod.	Operating Rate (max) or tank capacity
Change yes/no	na	na	na	na cu ft/min	na ft/sec.	Jan-07	1.30 mmscfd

Fuel	Type of fuel used and heat input		Operating Characteristics	Percent of annual throughput of pollutants through this emission point				Normal operating time of this point			Normal Operating Rate
		Type of fuel	Heat Input (MM BTU/hr)	Dec-Feb	Mar-May	Jun-Aug	Sep-Nov	hrs/day	days/wk	wk/yr	1.30 mmscfd
	a	na	na	25	25	25	25	24	7	52	
	b										
	c										

Air Pollutant Specific Information

Pollutant	Control Equipment Code	Control Equipment Efficiency	Emission Rate Average (lbs/hr)	Emission Rate Maximum (lbs/hr)	Emission Rate Annual (tons/yr)	Emission Estimation Method	Add, Change or Delete	Concentration in gases exiting at stack
Methane	99	0	2.770	2.770	12.144	5	Change	ppm/vol
Ethane	99	0	0.248	0.248	1.085	5	Change	ppm/vol
Total VOC's (incl. those below)	99	0	1.013	1.013	4.444	5	Change	ppm/vol
Propane	99	0	0.103	0.103	0.451	5	Change	ppm/vol
I-Butane	99	0	0.002	0.002	0.008	5	Change	ppm/vol
n-Butane	99	0	0.001	0.001	0.005	5	Change	ppm/vol
I-Pentane	99	0	0.001	0.001	0.005	5	Change	ppm/vol
n-Pentane	99	0	0.000	0.000	0.003	5	Change	ppm/vol
n-Hexane	99	0	0.004	0.004	0.014	5	Change	ppm/vol
Other Hexanes	99	0	0.005	0.005	0.023	5	Change	ppm/vol
Heptanes	99	0	0.002	0.002	0.006	5	Change	ppm/vol
Benzene	99	0	0.821	0.821	3.599	5	Change	ppm/vol
Toluene	99	0	0.039	0.039	0.173	5	Change	ppm/vol
Ethylbenzene	99	0	0.026	0.026	0.116	5	Change	ppm/vol
Xylene	99	0	0.009	0.009	0.041	5	Change	ppm/vol

Gas Dehydrator Still Vent

Description:	Amine Reboiler Still Vent

Source ID:	AMINVNT

Date:	1/1/2007

Reboiler Data	
Dry Gas Rate (mmscfd)	1.30
Dry Gas Water (lb/mmscf)	7
Glycol Pump	Kimray
Pump Speed	na
Controls (cnd./burn.)	no

Location of stack or vent		
UTM Zone	15	
Horizontal	500.725	mE
Vertical	3287.581	mN

Identification	
EID	
EPN	
FIN	
CIN	

Control Efficiency		
Control		
NOx	0	%
CO	0	%
VOC	0	%

Action:	Change

Operating Characteristics		
Normal Operating Time	8760	
hours/day	24.0	
days/week	7.0	
weeks/year	52	52.145

Facility Data	
Operator	Hilcorp Energy Company
Field Name	Hogg Bayou
Site Name	

Emissions Data From AMINECalc

Component	lb/hr	tons/year
Methane	2.77	12.144
Ethane	0.248	1.085
Propane	0.103	0.451
Isobutane	0.002	0.008
n-Butane	0.001	0.005
i-Pentane	0.001	0.005
n-Pentane	0	0.003
n-Hexane	0.004	0.014
Other Hexanes	0.005	0.023
Heptanes	0.002	0.006
2,2,4-TMP	0	0
Benzene	0.821	3.599
Toluene	0.039	0.173
Ethylbenzene	0.026	0.116
Xylene	0.009	0.041
Total HC	0	0
Total VOC	1.013	4.444
Total HAP	0.899	3.943

AMINECalc Input Data

Project Name:	Untitled Type project description here	
Model:	Gas Model	
Amine:	MDEA	
Lean Amine Pressure:	800.000	[psia]
Lean Amine Temperature:	100.000	[F]
Lean Amine Flowrate:	200.000	[gal/min]
Lean Amine Weight:	30.000	[%]
H2S Loading:	0.000	[mol/mol]
CO2 Loading:	0.500	[mol/mol]
Emission Control Efficiency	50.000	
Operating Hours/Day:	24	[hours/day]
Operating Days/Year:	365	[days/year]
Gas Feed Pressure:	31.000	[psia] ?
Gas Feed Temperature:	55.000	[F] ?
Gas Feed Flowrate:	1.300	[MMSCFD]
Number of Trays in Column:	20	
Flash Tank Pressure:	31.000	[psia] ?
H2S	0.00000	[%]
CO2	1.49450	[%]
MDEA	0.00000	[%]
H2O	0.00000	[%]
N2	0.32130	[%]
O2	0.00000	[%]
C1	91.77170	[%]
C2	3.77790	[%]
C3	1.30030	[%]
i-C4	0.43340	[%]
n-C4	0.29430	[%]
i-C5	0.15020	[%]
n-C5	0.10010	[%]
Hexanes	0.09410	[%]
Heptanes	0.09510	[%]
Octanes	0.01000	[%]
Nonanes	0.00900	[%]
C10+	0.00400	[%]
MeSH	0.00000	[%]
EtSH	0.00000	[%]
Benzene	0.07010	[%]
Toluene	0.02300	[%]
Ethylbenzene	0.00200	[%]
Xylenes	0.00600	[%]
n-C6	0.04300	[%]
224Trimeth	0.00000	[%]

AMINECalc Stream Results

Stream 1 Gas Food to Absorber

Component	Mol Fraction	[lb/h]	[ton/yr]
H2S	0.000000	0.000	0.000
CO2	0.014950	93.881	411.193
MDEA	0.000000	0.000	0.000
H2O	0.000000	0.000	0.000
N2	0.003210	12.847	56.270
C1	0.917720	2101.484	9204.344
C2	0.037780	162.150	710.203
C3	0.013000	81.844	358.469
i-C4	0.004330	35.956	157.487
n-C4	0.002940	24.416	106.941
i-C5	0.001500	15.468	67.750
n-C5	0.001000	10.309	45.152
Hexanes	0.000940	11.575	50.698
Heptanes	0.000950	13.602	59.576
Octanes	0.000100	1.630	7.142
Nonanes	0.000090	1.648	7.217
C10+	0.000040	0.812	3.558
Benzene	0.000700	7.816	34.233
Toluene	0.000230	3.025	13.248
Ethylbenzene	0.000020	0.303	1.327
Xylenes	0.000060	0.909	3.983
n-C6	0.000430	5.289	23.167
Total:	1.000000	2584.965	11321.950

Pressure 31.000 [psia]
Temperature 55.000 [F]

AMINECalc Stream Results

Stream 2 Rich Amine From Absorber

Component	Mol Fraction	[lb/h]	[ton/yr]
H2S	0.000000	0.000	0.000
CO2	0.029570	5842.387	25589.220
MDEA	0.059060	31596.540	138390.500
H2O	0.911330	73721.710	322895.600
N2	0.000000	0.008	0.035
C1	0.000040	2.773	12.144
C2	0.000000	0.248	1.086
C3	0.000000	0.103	0.451
i-C4	0.000000	0.002	0.008
n-C4	0.000000	0.001	0.006
i-C5	0.000000	0.001	0.006
n-C5	0.000000	0.001	0.003
Hexanes	0.000000	0.005	0.023
Heptanes	0.000000	0.001	0.007
Octanes	0.000000	0.000	0.001
Nonanes	0.000000	0.000	0.001
C10+	0.000000	0.000	0.000
Benzene	0.000000	0.822	3.599
Toluene	0.000000	0.040	0.173
Ethylbenzene	0.000000	0.026	0.116
Xylenes	0.000000	0.009	0.042
n-C6	0.000000	0.003	0.015
Total:	1.000000	111164.700	486893.100

Pressure	31.000	[psia]
Temperature	99.530	[F]

AMINECalc Stream Results

Stream 3 Flash Gas Vent Flow from Flash Tank

Component	----- Controlled ----- [lb/h]	[ton/yr]	----- Uncontrolled ----- [lb/h]	[ton/yr]
H2S	0.000	0.000	0.000	0.000
CO2	0.080	0.349	0.080	0.349
MDEA	0.000	0.000	0.000	0.000
H2O	0.005	0.020	0.009	0.040
N2	0.001	0.003	0.001	0.006
C1	0.117	0.511	0.233	1.023
C2	0.009	0.040	0.018	0.080
C3	0.005	0.020	0.009	0.040
i-C4	0.001	0.003	0.001	0.006
n-C4	0.000	0.002	0.001	0.004
i-C5	0.000	0.001	0.001	0.003
n-C5	0.000	0.001	0.000	0.002
Hexanes	0.001	0.002	0.001	0.004
Heptanes	0.000	0.002	0.001	0.003
Octanes	0.000	0.000	0.000	0.001
Nonanes	0.000	0.000	0.000	0.000
C10+	0.000	0.000	0.000	0.000
Benzene	0.001	0.003	0.001	0.006
Toluene	0.000	0.001	0.000	0.001
Ethylbenzene	0.000	0.000	0.000	0.000
Xylenes	0.000	0.000	0.000	0.000
n-C6	0.000	0.001	0.001	0.002
Total:	0.220	0.961	0.359	1.571

Pressure 31.000 [psia]
Temperature 99.580 [F]

0.073 VOC

controlled VOC 0.038 tpy

AMINECalc Stream Results

Stream 4 Rich Amine Feed to Regenerator

Component	Mol Fraction	[lb/h]	[ton/yr]
H2S	0.000000	0.000	0.000
CO2	0.029570	5842.307	25588.870
MDEA	0.059060	31596.540	138390.500
H2O	0.911340	73721.700	322895.600
N2	0.000000	0.007	0.030
C1	0.000040	2.539	11.121
C2	0.000000	0.230	1.005
C3	0.000000	0.094	0.411
i-C4	0.000000	0.001	0.002
n-C4	0.000000	0.000	0.001
i-C5	0.000000	0.000	0.002
n-C5	0.000000	0.000	0.001
Hexanes	0.000000	0.004	0.019
Heptanes	0.000000	0.001	0.003
Octanes	0.000000	0.000	0.001
Nonanes	0.000000	0.000	0.000
C10+	0.000000	0.000	0.000
Benzene	0.000000	0.820	3.593
Toluene	0.000000	0.039	0.172
Ethylbenzene	0.000000	0.026	0.116
Xylenes	0.000000	0.009	0.041
n-C6	0.000000	0.003	0.012
Total:	1.000000	111164.300	486891.500

Pressure	31.000	[psia]
Temperature	99.530	[F]

AMINECalc Stream Results

Stream 5 Acid Gas Flow from Regenerator

Component	----- Controlled ----- [lb/h]	[ton/yr]	----- Uncontrolled ----- [lb/h]	[ton/yr]
H2S	0.000	0.000	0.000	0.000
CO2	7.936	34.759	7.936	34.759
MDEA	0.000	0.000	0.000	0.000
H2O	0.000	0.000	0.000	0.000
N2	0.003	0.014	0.007	0.030
C1	1.270	5.561	2.539	11.121
C2	0.115	0.503	0.230	1.005
C3	0.047	0.205	0.094	0.411
i-C4	0.000	0.001	0.001	0.002
n-C4	0.000	0.001	0.000	0.001
i-C5	0.000	0.001	0.000	0.002
n-C5	0.000	0.001	0.000	0.001
Hexanes	0.002	0.009	0.004	0.019
Heptanes	0.000	0.001	0.001	0.003
Octanes	0.000	0.000	0.000	0.001
Nonanes	0.000	0.000	0.000	0.000
C10+	0.000	0.000	0.000	0.000
Benzene	0.410	1.797	0.820	3.593
Toluene	0.020	0.086	0.039	0.172
Ethylbenzene	0.013	0.057	0.026	0.116
Xylenes	0.005	0.021	0.009	0.041
n-C6	0.001	0.007	0.003	0.012
Total:	9.822	43.024	11.710	51.291
Pressure	N/A	[psia]		
Temperature	N/A	[F]		

4.376 VOC

controlled VOC 2.187

AMINECalc Stream Results

Stream 6 Lean Amine from Regenerator

Component	Mol Fraction	[lb/h]	[ton/yr]
H2S	0.000000	0.000	0.000
CO2	0.029530	5834.371	25554.110
MDEA	0.059060	31596.550	138390.500
H2O	0.911410	73725.280	322911.200
N2	0.000000	0.000	0.000
C1	0.000000	0.000	0.000
C2	0.000000	0.000	0.000
C3	0.000000	0.000	0.000
i-C4	0.000000	0.000	0.000
n-C4	0.000000	0.000	0.000
i-C5	0.000000	0.000	0.000
n-C5	0.000000	0.000	0.000
Hexanes	0.000000	0.000	0.000
Heptanes	0.000000	0.000	0.000
Octanes	0.000000	0.000	0.000
Nonanes	0.000000	0.000	0.000
C10+	0.000000	0.000	0.000
Benzene	0.000000	0.000	0.000
Toluene	0.000000	0.000	0.000
Ethylbenzene	0.000000	0.000	0.000
Xylenes	0.000000	0.000	0.000
n-C6	0.000000	0.000	0.000
Total:	1.000000	111156.200	486855.900

Pressure	800.000	[psia]
Temperature	100.000	[F]

AMINECalc Stream Results

Stream 7 Sweet Gas Flow from Absorber

Component	Mol Fraction	[lb/h]	[ton/yr]
H2S	0.000000	0.000	0.000
CO2	0.013690	85.874	376.120
MDEA	0.000000	0.001	0.003
H2O	0.001390	3.571	15.640
N2	0.003220	12.839	56.235
C1	0.917660	2098.705	9192.173
C2	0.037770	161.901	709.115
C3	0.013000	81.740	358.017
i-C4	0.004340	35.954	157.478
n-C4	0.002950	24.415	106.936
i-C5	0.001500	15.467	67.745
n-C5	0.001000	10.308	45.149
Hexanes	0.000940	11.570	50.674
Heptanes	0.000950	13.601	59.569
Octanes	0.000100	1.630	7.140
Nonanes	0.000090	1.647	7.216
C10+	0.000040	0.812	3.558
Benzene	0.000630	6.994	30.634
Toluene	0.000230	2.985	13.075
Ethylbenzene	0.000020	0.277	1.211
Xylenes	0.000060	0.900	3.941
n-C6	0.000430	5.286	23.151
Total:	1.000000	2576.477	11284.780

Pressure	800.000	[psia]
Temperature	100.014	[F]

LAFAYETTE LABORATORY
500 AMBASSADOR CAFFERY PKWY.
SCOTT, LOUISIANA 70583-1700
PHONE (337) 237 4775
FAX (337) 237-8005

Certificate of Analysis Number: 2007010031-001A

FOR: Hilcorp Energy Company
Mike Schoch
PO Box 61229
Houston TX 77208-1229

CUSTOMER: Hilcorp Energy Company
FIELD : Hog Bayou
LOCATION : S/L 1170-1
SAMPLE POINT: Before Amine
REPORT DATE: 1/4/2007
SAMPLE DATE: 1/3/2007
SAMPLED BY: Doug LeMaire
REMARKS1:
REMARKS2:

TYPE: Gas
REPORT: C10+ (GPA Method 2286)
CYLINDER: 11055
PRESSURE: 31
TEMPERATURE: 55

COMPONENT	MOL %	WEIGHT %	GPM's @ 15.025
N2	0.321	0.495	
CO2	1.493	3.612	
METHANE	91.678	80.847	
ETHANE	3.774	6.239	1.029
PROPANE	1.299	3.150	0.365
I-BUTANE	0.433	1.385	0.144
N-BUTANE	0.294	0.940	0.095
I-PENTANE	0.150	0.594	0.056
N-PENTANE	0.100	0.396	0.037
I-HEXANES	0.094	0.444	0.039
N-HEXANE	0.043	0.205	0.018
I-HEPTANES	0.079	0.418	0.034
N-HEPTANE	0.027	0.149	0.013
BENZENE	0.070	0.287	0.019
CYCLOHEXANE	0.029	0.137	0.010
TOLUENE	0.023	0.116	0.008
I-OCTANES	0.061	0.340	0.027
N-OCTANE	0.010	0.065	0.005
*E-BENZENE	0.002	0.012	0.001
*m,o,&p-XYLENE	0.006	0.027	0.002
I-NONANES	0.007	0.060	0.005
N-NONANE	0.002	0.016	0.001
I-DECANES	0.001	0.037	0.003
N-DECANE	0.001	0.007	0.001
I-UNDECANES +	0.003	0.022	0.002
TOTALS	100.000	100.000	1.914

LAFAYETTE LABORATORY
500 AMBASSADOR CAFFERY PKWY.
SCOTT, LOUISIANA 70583-1700
PHONE (337) 237-4775
FAX (337) 237-8005

Certificate of Analysis Number: 2007010031-001A

FOR: Hilcorp Energy Company
Mike Schoch
PO Box 61229
Houston TX 77208-1229

CUSTOMER: Hilcorp Energy Company
FIELD : Hog Bayou
LOCATION : S/L 1170-1
SAMPLE POINT: Before Amine
REPORT DATE: 1/4/2007
SAMPLE DATE: 1/3/2007
SAMPLED BY: Doug LeMaire
REMARKS1:
REMARKS2:

TYPE: Gas
REPORT: C6+
CYLINDER: 11055
PRESSURE: 31
TEMPERATURE: 55

COMPONENT	MOL %	WEIGHT %	GPM's @ 15.025
N2	0.321	0.495	
CO2	1.493	3.612	
METHANE	91.678	80.847	
ETHANE	3.774	6.239	1.029
PROPANE	1.299	3.150	0.365
I-BUTANE	0.433	1.385	0.144
N-BUTANE	0.294	0.940	0.095
I-PENTANE	0.150	0.594	0.056
N-PENTANE	0.100	0.396	0.037
HEXANES PLUS	0.458	2.342	0.188
TOTALS	100.000	100.000	1.914

CALCULATED VALUES	TOTAL	C6+	C7+
MOLECULAR WEIGHT	18.191	92.937	96.525
REAL DRY BTU AT 15.025 PSIA, 60 DEG.F	1108.7	5015.0	5120.0
REAL WET BTU AT 15.025 PSIA, 60 DEG.F	1090.6	4930.3	5033.5
RELATIVE DENSITY	0.6293	3.1892	3.3012

	C2+	IC5+
GPM's AT 15.025	1.914	0.281

COMPRESSIBILITY FACTOR 0.99740

LAFAYETTE LABORATORY
500 AMBASSADOR CAFFERY PKWY.
SCOTT, LOUISIANA 70583-1790
PHONE (337) 237-4775
FAX (337) 237-9005

Certificate of Analysis Number: 2007010031-001A

FOR: Hilcorp Energy Company
Mike Schoch
PO Box 61229
Houston TX 77208-1229

CUSTOMER: Hilcorp Energy Company
FIELD : Hog Bayou
LOCATION : S/L 1170-1
SAMPLE POINT: Before Amine
REPORT DATE: 1/4/2007
SAMPLE DATE: 1/3/2007
SAMPLED BY: Doug LeMaire
REMARKS1:
REMARKS2:

TYPE: Gas
REPORT: C7+
CYLINDER: 11055
PRESSURE: 31
TEMPERATURE: 55

COMPONENT	MOL %	WEIGHT %	GPM's @ 15.025
N2	0.321	0.495	
CO2	1.493	3.612	
METHANE	91.678	80.847	
ETHANE	3.774	6.239	1.029
PROPANE	1.299	3.150	0.365
I-BUTANE	0.433	1.385	0.144
N-BUTANE	0.294	0.940	0.095
I-PENTANE	0.150	0.594	0.056
N-PENTANE	0.100	0.396	0.037
HEXANES	0.137	0.649	0.057
HEPTANES PLUS	0.321	1.693	0.131
TOTALS	100.000	100.000	1.914

CALCULATED VALUES	TOTAL	C6+	C7+
MOLECULAR WEIGHT	18.191	92.937	96.525
REAL DRY BTU AT 15.025 PSIA, 60 DEG.F	1108.7	5015.0	5120.0
REAL WET BTU AT 15.025 PSIA, 60 DEG.F	1090.6	4930.3	5033.5
RELATIVE DENSITY	0.6293	3.1892	3.3012

	C2+	IC5+
GPM's AT 15.025	1.914	0.281

COMPRESSIBILITY FACTOR 0.9874

SPL, Inc.

Analysis Request & Chain of Custody Record

SPL Work Order No.: 2007010031

SPL $ 50891

Page 1 of 1

Company: Helena Energy Co.

Address:

Contact: Matt Bothwell

Phone/Fax: 337-824-0043

Field/Project: Hog Bayou Pipeline (Shared)

Invoice to (company name):

Contact:

Phone/Fax:

Address:

Special Instructions: Hilcorp, E. Main, Pat Mike & Chuck, Matt Bothwell & LLenaria@Aol.com

Requested TAT:
- [x] 24hr*
- [ ] 48hr*
- [ ] 72hr*
- [ ] Standard
- [ ] Other

* Surcharges May Apply

* Terms: Cylinders will be rented for $15/cyl. All cylinders checked out are to be returned within 21 days, whether they contain sample or not. Cylinders not returned after 30 days will be considered lost and will be billed at current replacement cost.

Requested Analysis: CLOT GAS

Sample ID	Sample Date	Sample Time	Sample Of	Duplica	Compo	Spot	Cylinder Tracking Info * Cylinder #	Date Out	Date In	CLOT GAS	Comments
Hog Bayou	1-3-06		Gas				11055			✓	31#@55°
Hog Bayou											
Amin Tank											
& Dry											

Sampled By-Print Name: Doug LeMaire

Signature: Doug LeMaire

Company Name:

Relinquished By-Print Name: Date: Time:

Signature:

Received By-Print Name: Date: Time:

Signature:

Relinquished By-Print Name: Date: Time:

Signature:

Received By-Print Name: Date: 1/3/06 Time:

Signature: Terry Moulton

- [ ] 8883 Interchange Dr. Houston, TX 77054 (713) 660-0901
- [ ] 500 Ambassador Caffery Pkwy. Scott, LA 70583 (337) 237-4775
- [ ] 9221 Highway 23 Belle Chasse, LA 70037 (504) 391-1337
- [ ] 1595 US 79 South Carthage, TX 75633 (903) 693-6242
- [ ] P.O. Box 3079 Laurel, MS 39442 (601) 428-0842
- [ ] 459 Hughes Dr. Traverse City, MI 49686 (616) 947-5777