2063-42

STATE OF LOUISIANA
DEPARTMENT OF ENVIRONMENTAL QUALITY
OFFICE OF ENVIRONMENTAL AFFAIRS
SOLID WASTE DIVISION
PERMITS SECTION

PERMIT RENEWAL APPLICATION

FOR

RIVER BIRCH LANDFILL

D-051-6 741/P-0321
AIN 32219

PREPARED BY:

PLM

PAUL L. MIERS ENGINEERING, LLC

SUBMITTED FOR:

RIVER BIRCH, INC.

VOLUME IV of IV

June 13, 2005
Revised: March 2007

ORIGINAL DRAWING PREPARED UNDER SUPERVISION OF PAUL L MIERS, ON MARCH 24, 2003. ANY REVISIONS MADE TO THE SITE OR DRAWINGS AFTER MARCH 24, 2003 ARE NOT THE RESPONSIBILITY OF PAUL L MIERS, PAUL L MIERS, ENGINEERING, LLC, OR MADER MIERS ENGINEERING, INC. BY ATTACHING SEAL AND SIGNING THIS DRAWING I AM VERIFYING THAT THE ORIGINAL DRAWING WAS PREPARED UNDER MY DIRECTION.

4-9-08

PAUL L. MIERS, P.E. REG. NO. 20741

STATE OF LOUISIANA
PAUL L. MIERS
REG. No. 20741
REGISTERED
PROFESSIONAL ENGINEER
IN
ENVIRONMENTAL ENGINEERING

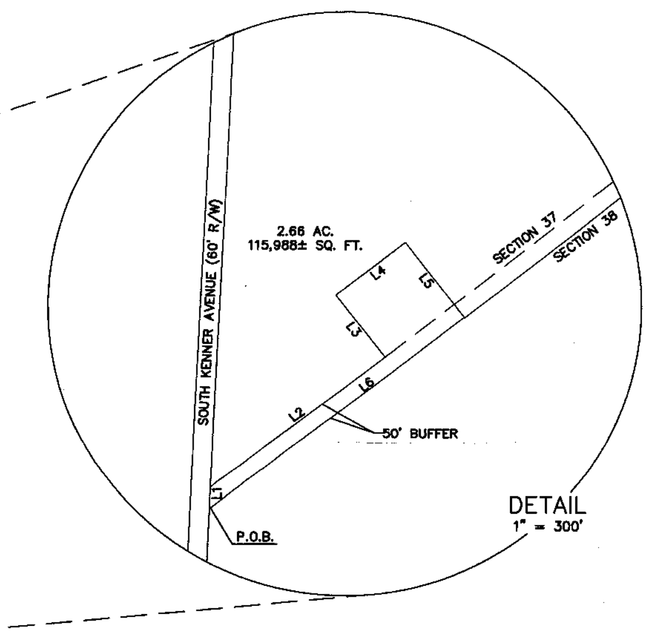

LINE TABLE		
LINE	LENGTH	BEARING
L1	65.82	N03°38'28"E
L2	682.37	N53°04'24"E
L3	249.29	N36°55'36"W
L4	270.00	N53°04'24"E
L5	299.29	N36°55'36"W
L6	995.00	N52°56'21"W

REVISED BY ENGINEERING ASSOCIATES, INC.
NOVEMBER, 2007 TO REMOVE 2.66 ACRE
PARCEL AT SOUTHEAST CORNER OF LANDFILL.

0 1000' 2000' 4000'
SCALE: 1" = 2000'

SOURCE: USGS QUADRANGLES,
LULING AND NEW ORLEANS WEST, 1992

FIGURE 1
SITE LOCATION MAP

RIVER BIRCH LANDFILL
RIVER BIRCH LANDFILL, INC.

Note:
This drawing was originally prepared by and remains the work product of Mader-Miers Engineering/Paul L. Miers, P.E. Revisions to this drawing that are the work product of Engineering Associates/Stephen J. Burnham, P.E. are specifically noted as such hereon.

DATE	DESCRIPTION	BY
	REVISED	

mader-miers
ENGINEERING, INC
3909 W. CONGRESS ST., SUITE 101 – LAFAYETTE, LOUISIANA 70506
PHONE NO. (337) 989-8047 FAX (337) 988-3219

Date of Survey:	Book:	Page:	ENGINEER P.L.M.	CHECKED P.L.M.
			DRAWN BY R.T.G.	APPROVED P.L.M.
			RDN 2063	SDN 12

STATE OF LOUISIANA
STEPHEN J. BURNHAM
REG. No. 24829
REGISTERED
PROFESSIONAL ENGINEER
IN
CIVIL ENGINEERING
4/9/08

PART OF SECTIONS 4, 6, 36 AND 37
T 13 S, R 22 E, SOUTHEASTERN LAND
DISTRICT OF LOUISIANA WEST OF THE
MISSISSIPPI RIVER, WAGGAMAN
JEFFERSON PARISH, LOUISIANA

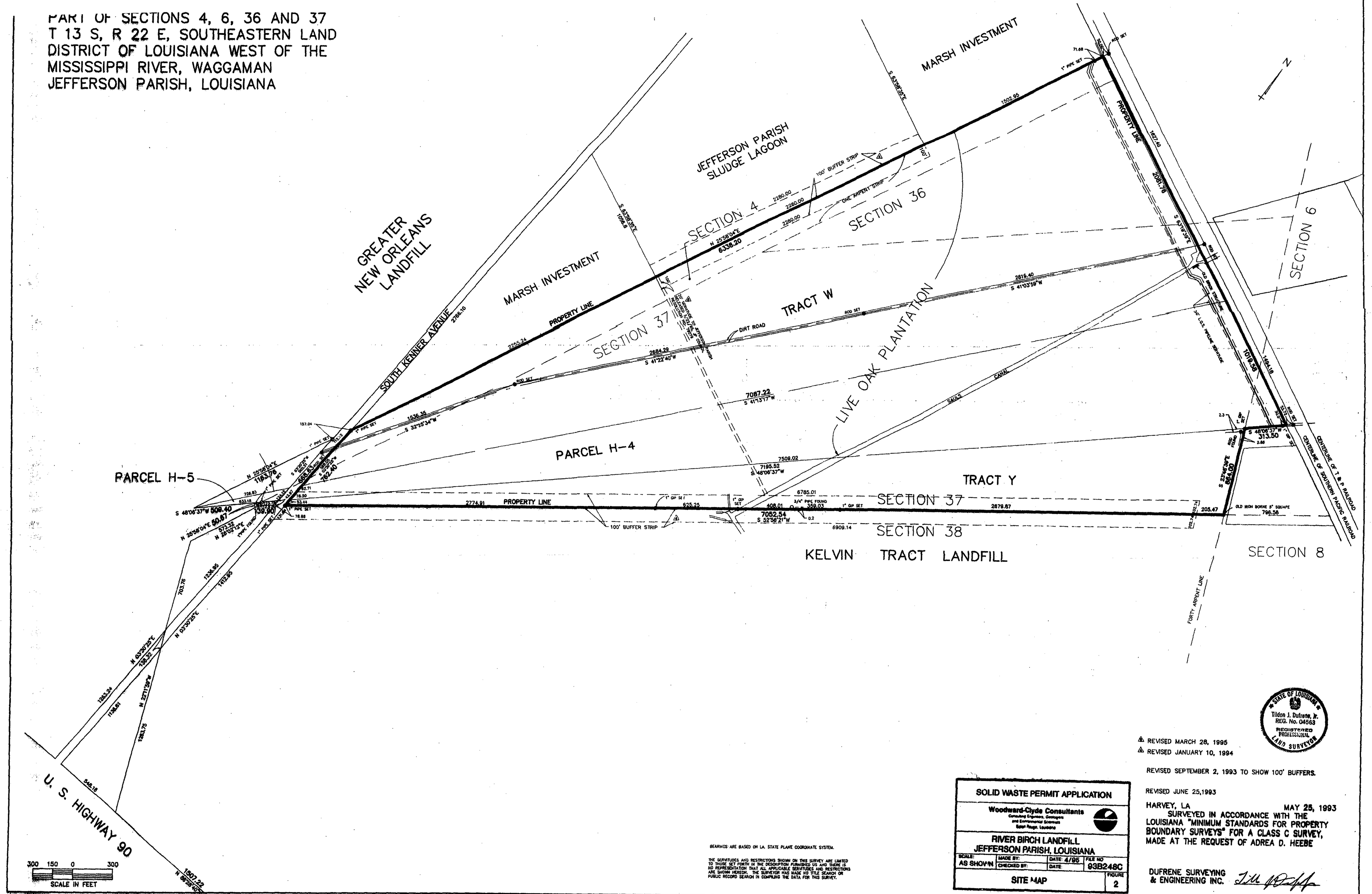

BEARINGS ARE BASED ON LA. STATE PLANE COORDINATE SYSTEM.

THE SERVITUDES AND RESTRICTIONS SHOWN ON THIS SURVEY ARE LIMITED TO THOSE SET FORTH IN THE DESCRIPTION FURNISHED US AND THERE IS NO REPRESENTATION THAT ALL APPLICABLE SERVITUDES AND RESTRICTIONS ARE SHOWN HEREON. THE SURVEYOR HAS MADE NO TITLE SEARCH OR PUBLIC RECORD SEARCH IN COMPILING THE DATA FOR THIS SURVEY.

STATE OF LOUISIANA
Tildon J. Dufrene, Jr.
REG. No. 04563
REGISTERED PROFESSIONAL LAND SURVEYOR

REVISED MARCH 28, 1995
REVISED JANUARY 10, 1994

REVISED SEPTEMBER 2, 1993 TO SHOW 100' BUFFERS.

REVISED JUNE 25,1993

HARVEY, LA MAY 25, 1993
SURVEYED IN ACCORDANCE WITH THE LOUISIANA "MINIMUM STANDARDS FOR PROPERTY BOUNDARY SURVEYS" FOR A CLASS C SURVEY, MADE AT THE REQUEST OF ADREA D. HEEBE

DUFRENE SURVEYING & ENGINEERING INC.

SOLID WASTE PERMIT APPLICATION			
Woodward-Clyde Consultants Consulting Engineers, Geologists and Environmental Scientists Baton Rouge, Louisiana			
RIVER BIRCH LANDFILL JEFFERSON PARISH, LOUISIANA			
SCALE: AS SHOWN	MADE BY:	DATE: 4/95	FILE NO 93B248C
	CHECKED BY:	DATE:	
SITE MAP			FIGURE 2

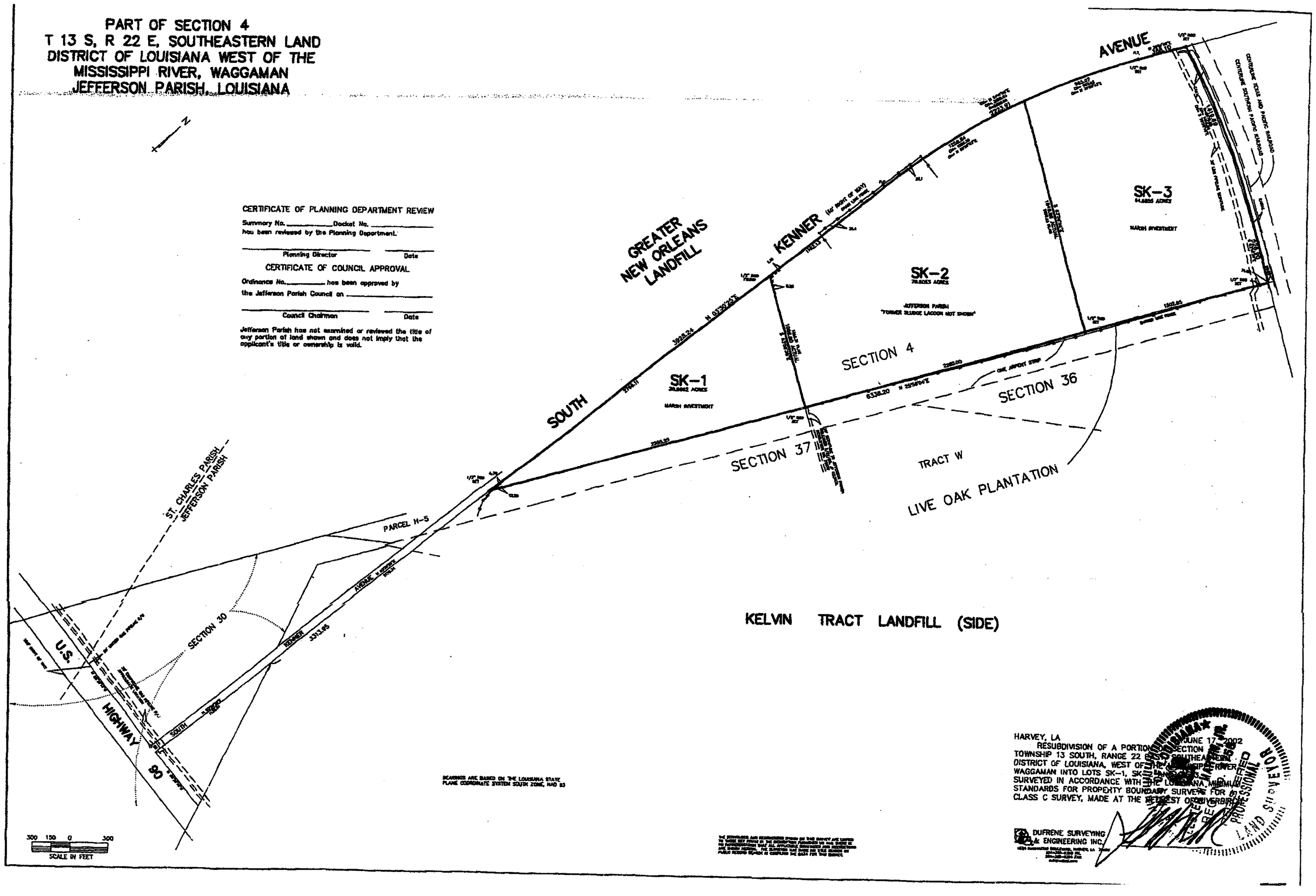

FIGURE 2.1

PROPERTY MAP WEST EXPANSION

RIVER BIRCH LANDFILL

RIVER BIRCH LANDFILL, INC.

K:\20603\12\DWG\FIG2.1.dwg Tue Mar 18 10:44:30 2003

ORIGINAL DRAWING PREPARED UNDER SUPERVISION OF PAUL L MIERS, ON MARCH 24, 2003. ANY REVISIONS MADE TO THE SITE OR DRAWINGS AFTER MARCH 24, 2003 ARE NOT THE RESPONSIBILITY OF PAUL L MIERS, PAUL L MIERS, ENGINEERING, LLC, OR MADER MIERS ENGINEERING, INC. BY ATTACHING SEAL AND SIGNING THIS DRAWING I AM VERIFYING THAT THE ORIGINAL DRAWING WAS PREPARED UNDER MY DIRECTION.

4-9-08

PAUL L. MIERS, P.E. REG. NO. 20741

STATE OF LOUISIANA
PAUL L. MIERS
REG. No. 20741
REGISTERED PROFESSIONAL ENGINEER
ENVIRONMENTAL ENGINEERING

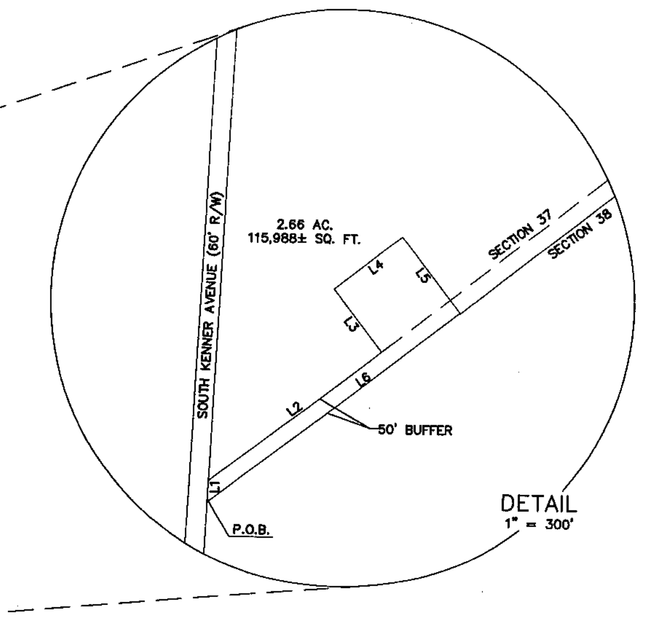

LINE TABLE		
LINE	LENGTH	BEARING
L1	65.82	N03°38'28"E
L2	682.37	N53°04'24"E
L3	249.29	N36°55'36"W
L4	270.00	N53°04'24"E
L5	299.29	N36°55'36"W
L6	995.00	N52°56'21"W

REVISED BY ENGINEERING ASSOCIATES, INC. NOVEMBER, 2007 TO REMOVE 2.66 ACRE PARCEL AT SOUTHEAST CORNER OF LANDFILL.

0 1000' 2000' 4000'
SCALE: 1" = 2000'

SOURCE: USGS QUADRANGLES,
LULING AND NEW ORLEANS WEST, 1992

FIGURE 3
LAND USE MAP

RIVER BIRCH LANDFILL
RIVER BIRCH LANDFILL, INC.

mader-miers
ENGINEERING, INC
3909 W. CONGRESS ST., SUITE 101 – LAFAYETTE, LOUISIANA 70506
PHONE NO. (337) 989-8047 FAX (337) 988-3219

STATE OF LOUISIANA
STEPHEN J. BURNHAM
REG. No. 24092
REGISTERED PROFESSIONAL ENGINEER
CIVIL ENGINEERING
4/10/08

Date of Survey:	Book:	Page:	ENGINEER P.L.M.	CHECKED P.L.M.
			DRAWN BY R.T.G.	APPROVED P.L.M.

DATE	DESCRIPTION	BY

Note:
This drawing was originally prepared by and remains the work product of Mader-Miers Engineering/Paul L. Miers, P.E. Revisions to this drawing that are the work product of Engineering Associates/Stephen J. Burnham, P.E. are specifically noted as such hereon.

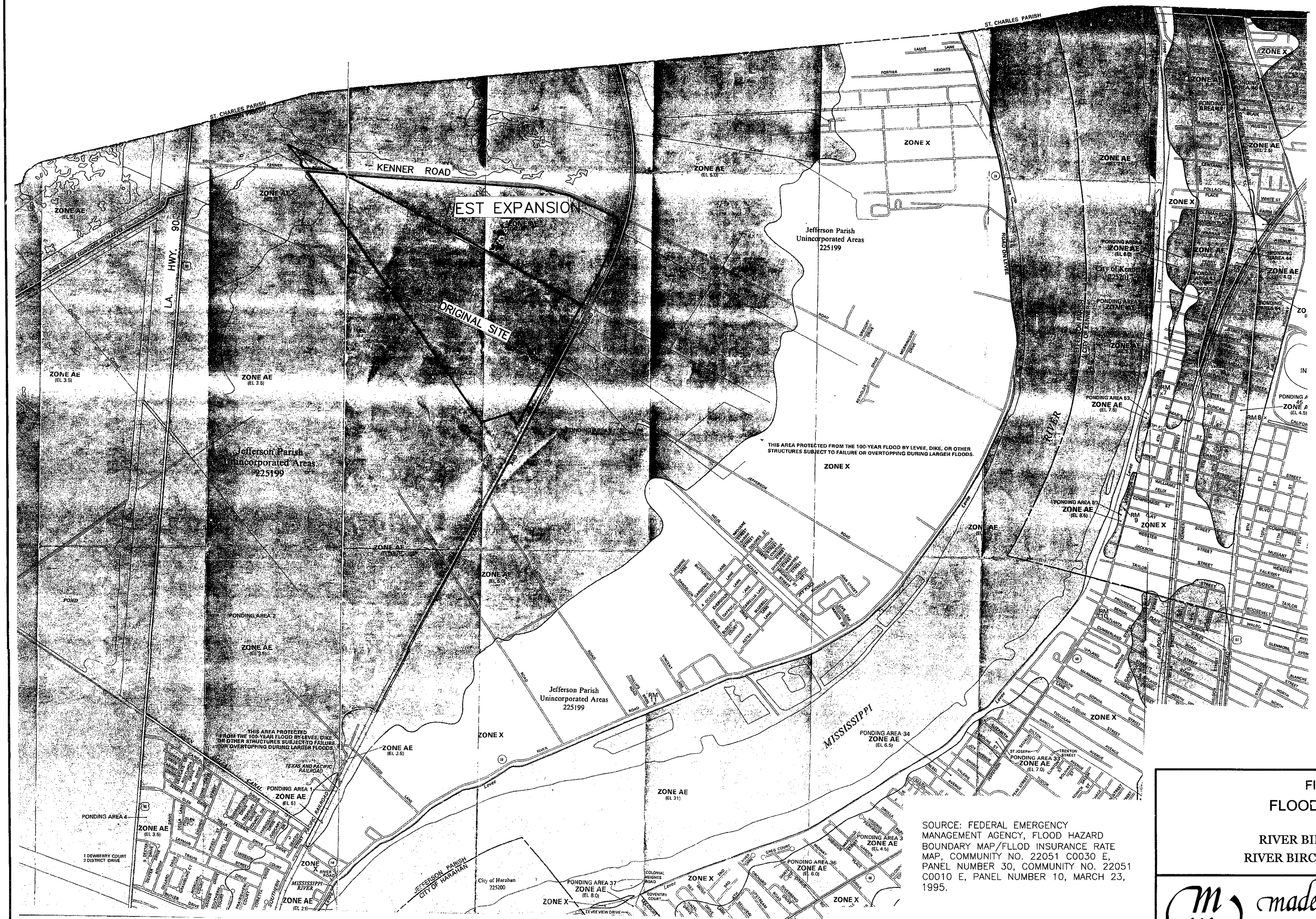
ST. CHARLES PARISH
KENNER ROAD
WEST EXPANSION
ORIGINAL SITE
LA. HWY. 90
ZONE AE
(EL 5.0)
ZONE AE
(EL 3.5)
ZONE X
Jefferson Parish
Unincorporated Areas
225199
City of Kenner
225215
THIS AREA PROTECTED FROM THE 100-YEAR FLOOD BY LEVEE, DIKE, OR OTHER STRUCTURES SUBJECT TO FAILURE OR OVERTOPPING DURING LARGEH FLOODS.
PONDING AREA 2
PONDING AREA 1
ZONE AE
(EL 6)
PONDING AREA 4
ZONE AE
(EL 3.5)
THIS AREA PROTECTED FROM THE 100-YEAR FLOOD BY LEVEE, DIKE, OR OTHER STRUCTURES SUBJECT TO FAILURE OR OVERTOPPING DURING LARGER FLOODS.
TEXAS AND PACIFIC RAILROAD
MISSISSIPPI RIVER
MISSISSIPPI
PONDING AREA 34
ZONE AE
(EL 6.5)
PONDING AREA 33
ZONE AE
(EL 7.0)
PONDING AREA 3
ZONE AE
(EL 4.5)
PONDING AREA 36
ZONE AE
(EL 6.0)
PONDING AREA 37
ZONE AE
(EL 8.0)
City of Harahan
225200
JEFFERSON PARISH
CITY OF HARAHAN
PONDING AREA 53
ZONE AE
(EL 7.5)
PONDING AREA 80
ZONE AE
(EL 8.5)
ZONE AE
(EL 7.5)
ZONE AE
(EL 2.5)
ZONE AE
(EL 4.5)
ZONE AE
(EL 21)
ZONE AE
(EL 8.0)
ZONE AE
(EL 3.5)
ZONE AE
(EL 3.5)
ZONE AE
(EL 3.5)
ZONE AE
(EL 21)
ZONE X
ZONE X
ZONE X

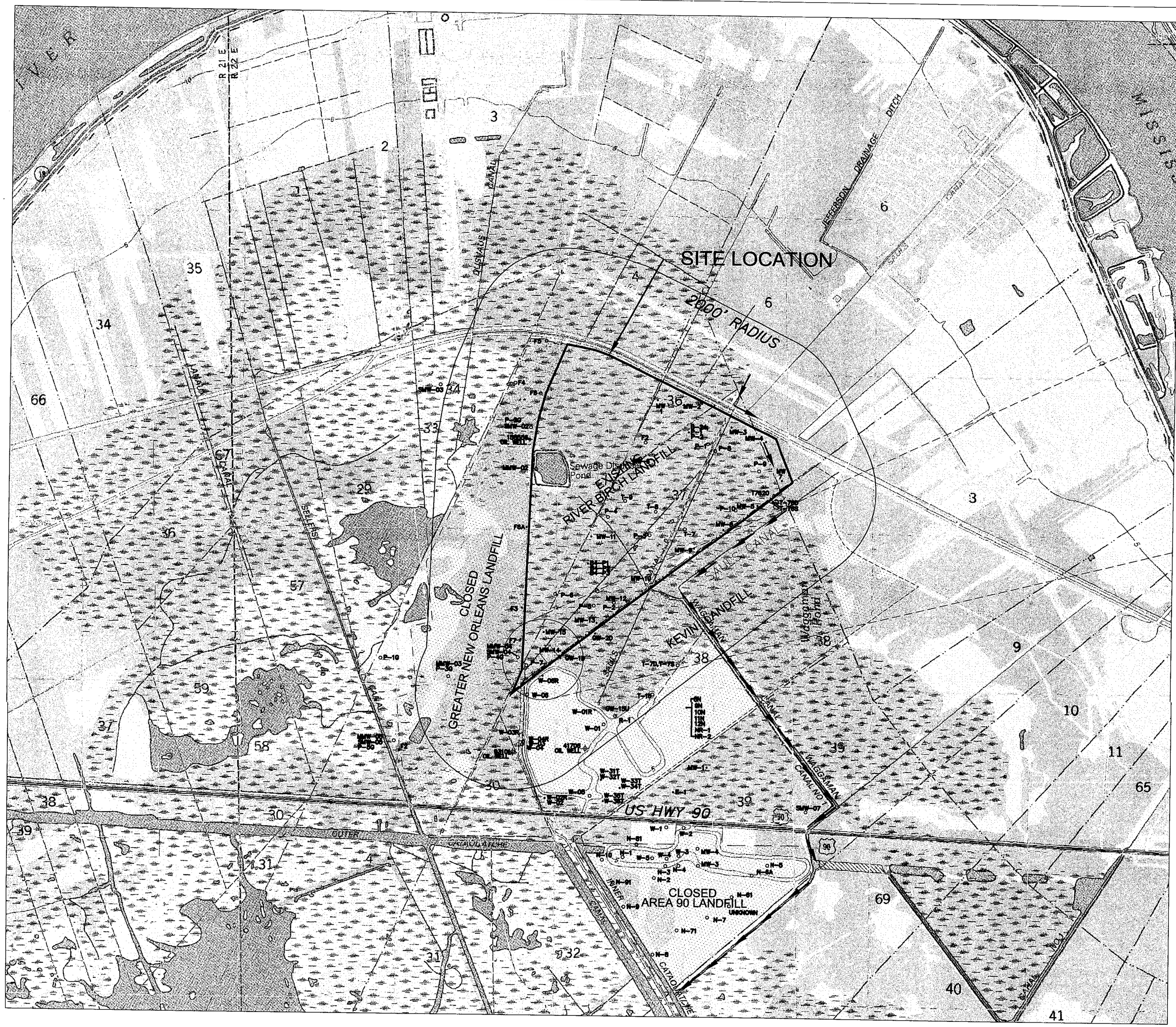

Note:
This drawing was originally prepared by and remains the work product of Mader-Miers Engineering/Paul L. Miers, P.E. Revisions to this drawing that are the work product of Engineering Associates/Stephen J. Burnham, P.E. are specifically noted as such hereon.

ORIGINAL DRAWING PREPARED UNDER SUPERVISION OF PAUL L MIERS, ON MARCH 24, 2003. ANY REVISIONS MADE TO THE SITE OR DRAWINGS AFTER MARCH 24, 2003 ARE NOT THE RESPONSIBILITY OF PAUL L MIERS, PAUL L MIERS, ENGINEERING, LLC, OR MADER MIERS ENGINEERING, INC. BY ATTACHING SEAL AND SIGNING THIS DRAWING I AM VERIFYING THAT THE ORIGINAL DRAWING WAS PREPARED UNDER MY DIRECTION.

4-9-03

PAUL L MIERS, P.E. REG. NO. 20741

STATE OF LOUISIANA
PAUL L. MIERS
REG. No. 20741
REGISTERED PROFESSIONAL ENGINEER IN ENVIRONMENTAL ENGINEERING

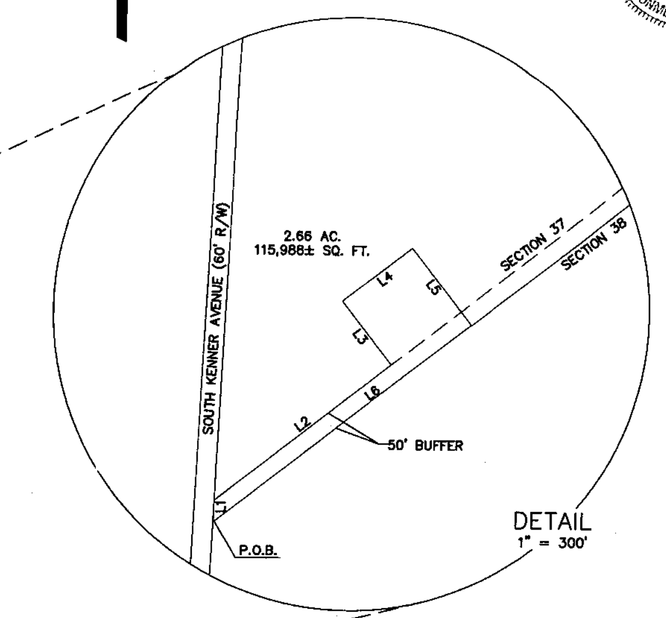

DETAIL
1" = 300'

LINE TABLE		
LINE	LENGTH	BEARING
L1	65.82	N03°38'28"E
L2	682.37	N53°04'24"E
L3	249.29	N36°55'36"W
L4	270.00	N53°04'24"E
L5	299.29	N36°55'36"W
L6	995.00	N52°56'21"W

REVISED BY ENGINEERING ASSOCIATES, INC. NOVEMBER, 2007 TO REMOVE 2.66 ACRE PARCEL AT SOUTHEAST CORNER OF LANDFILL.

LEGEND

- • MONITORING WELLS AND PIEZOMETER
- ✦ OIL AND GAS WELLS
- O PLUGGED WELLS

0 500' 1000' 2000'
SCALE: 1" = 1000'

SOURCE: USGS QUADRANGLES,

LULING AND NEW ORLEANS WEST, 1992

COORDINATES FOR WELLS, BORINGS OR PIEZOMETERS WERE PROVIDED BY THE LA. DEPARTMENT OF TRANSPORTATION AND DEVELOPMENT OFFICE OF PUBLIC WORKS.

FIGURE 5-R1
LOCATION OF WELLS

RIVER BIRCH LANDFILL
RIVER BIRCH LANDFILL, INC.

PLM PAUL L. MIERS ENGINEERING, LLC
CIVIL ENGINEERS — LAND SURVEYORS
104 WESTMARK BLVD, SUITE 2A
PHONE (337) 981-7792
LAFAYETTE, LOUISIANA 70506
FAX(337) 981-7797

STATE OF LOUISIANA
STEPHEN J. BURNHAM
REG. NO. 24329
REGISTERED PROFESSIONAL ENGINEER IN CIVIL ENGINEERING

DATE	DESCRIPTION	
9/22/03	REVISED TO SHOW WELLS BY OWNER IDENTIFICATIONS NUMBER	P.L.M.

Date of Survey:	Book:	Page:	ENGINEER P.L.M.	CHECKED P.L.M.
			DRAWN BY R.T.G.	APPROVED P.L.M.

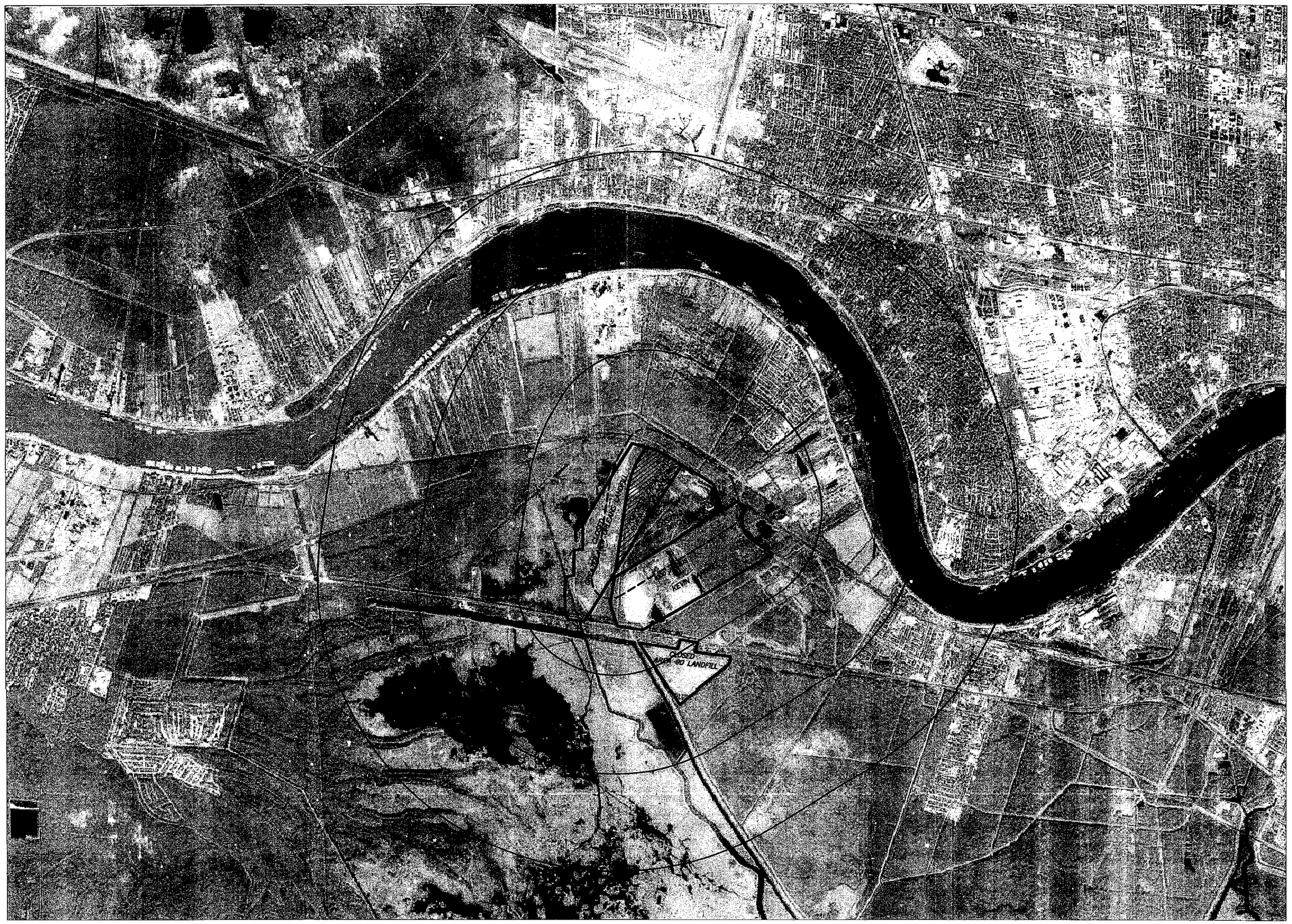

N

0 4000' 8000' 12000'

SCALE

AERIAL: TAKEN FROM TERRAFLY WEBSITE DATA
PROVIDED BY THE UNITED STATES GEOLOGICAL SURVEY

FIGURE 6

AERIAL PHOTOGRAPH

RIVER BIRCH LANDFILL

RIVER BIRCH LANDFILL, INC.

DATE	DESCRIPTION	BY
	REVISED	

mader-miers
ENGINEERING, INC
3909 W. CONGRESS ST., SUITE 101 – LAFAYETTE, LOUISIANA 70506
PHONE NO. (337) 989-8047 FAX (337) 988-3218

STATE OF LOUISIANA
PAUL L. MIERS
REG. NO. 20741
ESTATE OF
PROFESSIONAL ENGINEER IN
ENVIRONMENTAL ENGINEERING
2/24/03

Date of Survey:	Book:	Page:	ENGINEER P.L.M	CHECKED P.L.M
			DRAWN BY R.T.G.	APPROVED P.L.M
			BPN 2063	SPN 12

FILE D DWG

K:\2063\1E\DWG\F1605_AERIAL.dwg Tue Mar 18 14:57:23 2003

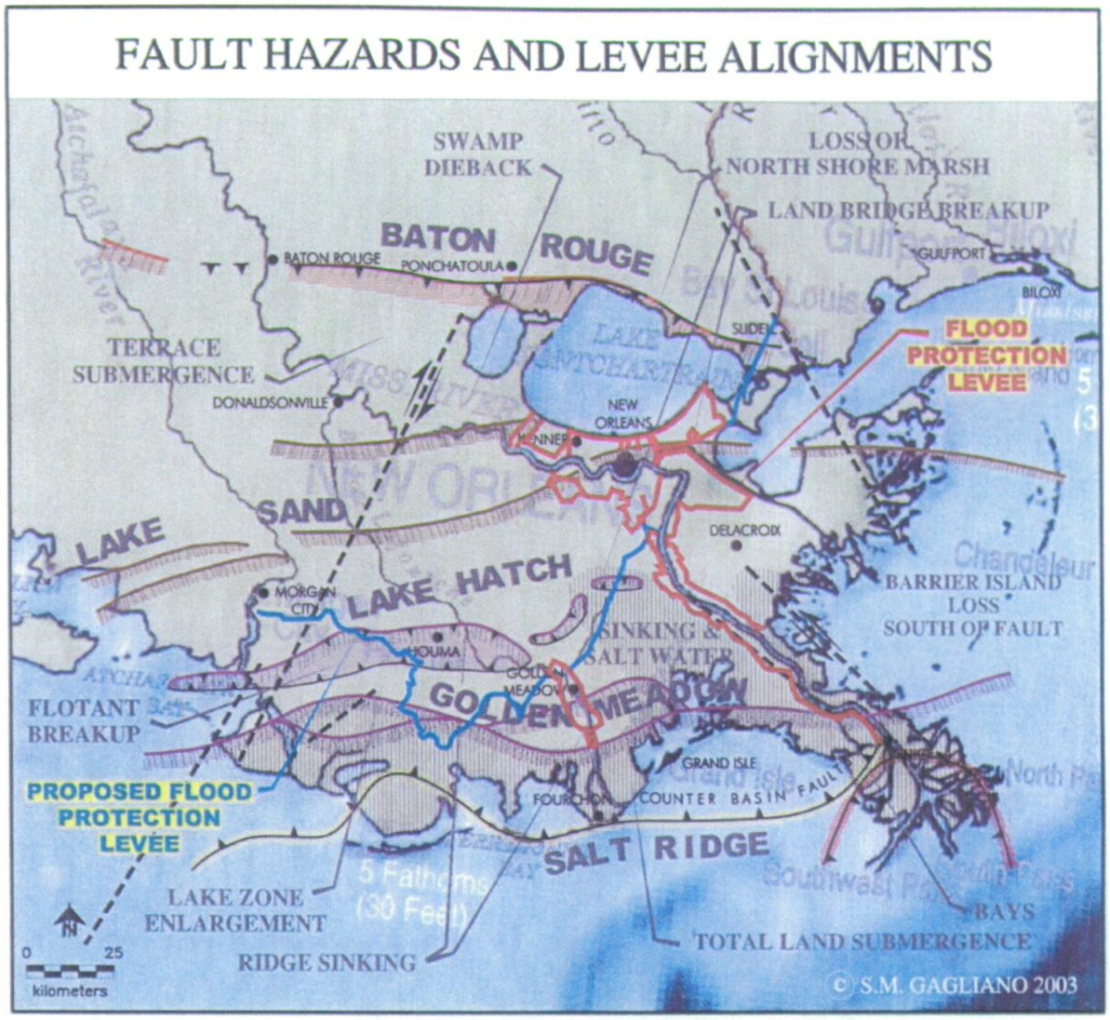

Figure 1. Existing and proposed hurricane protection levee alignments in reference to major geological faults in southeastern Louisiana.

PART OF SECTIONS 4, 6, 36 AND 37
T 13 S, R 22 E, SOUTHEASTERN LAND
DISTRICT OF LOUISIANA WEST OF THE
MISSISSIPPI RIVER, WAGGAMAN
JEFFERSON PARISH, LOUISIANA

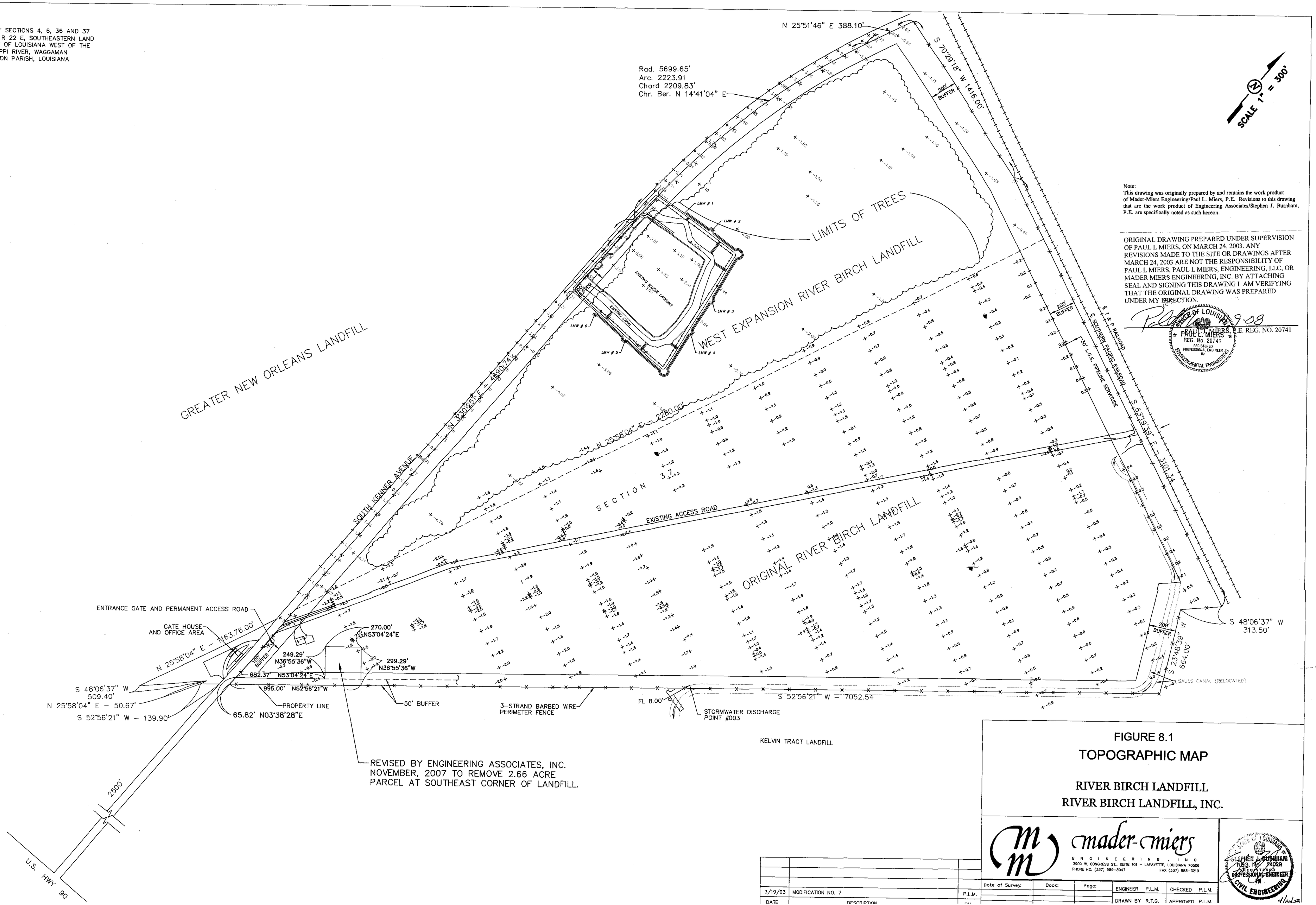

Note:
This drawing was originally prepared by and remains the work product of Mader-Miers Engineering/Paul L. Miers, P.E. Revisions to this drawing that are the work product of Engineering Associates/Stephen J. Burnham, P.E. are specifically noted as such hereon.

ORIGINAL DRAWING PREPARED UNDER SUPERVISION OF PAUL L MIERS, ON MARCH 24, 2003. ANY REVISIONS MADE TO THE SITE OR DRAWINGS AFTER MARCH 24, 2003 ARE NOT THE RESPONSIBILITY OF PAUL L MIERS, PAUL L MIERS, ENGINEERING, LLC, OR MADER MIERS ENGINEERING, INC. BY ATTACHING SEAL AND SIGNING THIS DRAWING I AM VERIFYING THAT THE ORIGINAL DRAWING WAS PREPARED UNDER MY DIRECTION.

9-09

PAUL L. MIERS, P.E. REG. NO. 20741

STATE OF LOUISIANA
PAUL L. MIERS
REG. No. 20741
REGISTERED PROFESSIONAL ENGINEER IN ENVIRONMENTAL ENGINEERING

FIGURE 8.1
TOPOGRAPHIC MAP

RIVER BIRCH LANDFILL
RIVER BIRCH LANDFILL, INC.

mader-miers
ENGINEERING, INC
3909 W. CONGRESS ST., SUITE 101 – LAFAYETTE, LOUISIANA 70506
PHONE NO. (337) 989-8047 FAX (337) 988-3219

STATE OF LOUISIANA
STEPHEN J. BURNHAM
REG. NO. 24029
REGISTERED PROFESSIONAL ENGINEER IN CIVIL ENGINEERING

DATE	DESCRIPTION	
3/19/03	MODIFICATION NO. 7	P.L.M.

Date of Survey:	Book:	Page:	ENGINEER P.L.M.	CHECKED P.L.M.
			DRAWN BY R.T.G.	APPROVED P.L.M.

4/2/08

PART OF SECTIONS 4, 6, 36 AND 37
T 13 S, R 22 E, SOUTHEASTERN LAND
DISTRICT OF LOUISIANA WEST OF THE
MISSISSIPPI RIVER, WAGGAMAN
JEFFERSON PARISH, LOUISIANA

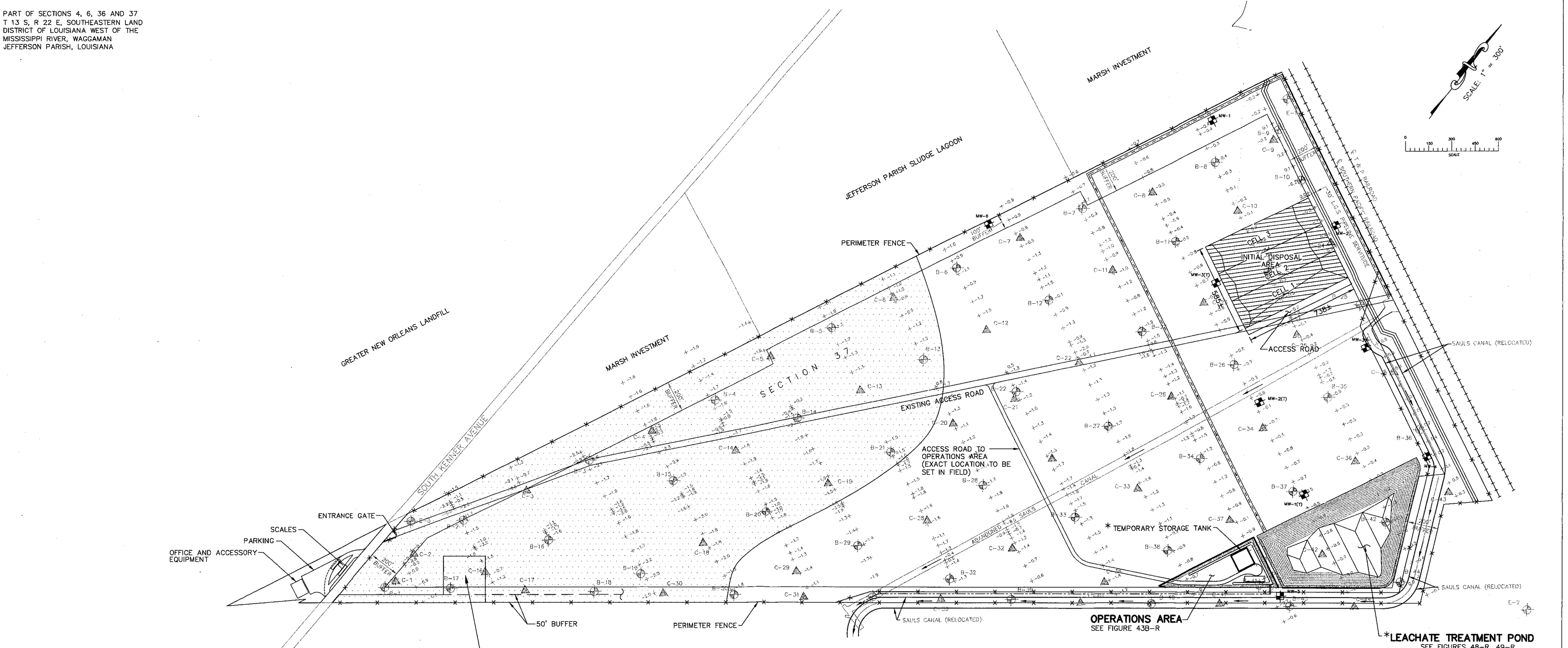

REVISED BY ENGINEERING ASSOCIATES, INC.
NOVEMBER, 2007 TO REMOVE 2.66 ACRE
PARCEL AT SOUTHEAST CORNER OF LANDFILL.

* LEACHATE TREATMENT POND IS PART OF MODIFICATION #5 AND WILL BE CONSTRUCTED WITHIN 60 DAYS OF APPROVAL OF THAT MODIFICATION. UNTIL THE LEACHATE TREATMENT POND IS COMPLETE, A TEMPORARY STORAGE TANK WILL BE USED TO STORE CONTAMINATED WATER. IF NECESSARY WATER WILL BE TRUCKED TO POTW FOR TREATMENT. ONCE THE LEACHATE TREATMENT POND IS CONSTRUCTED CONTENTS OF THE TEMPORARY STORAGE TANK WILL BE PUMPED INTO THE LEACHATE TREATMENT POND, THE TANK EMPTIED, THE LINER ROLLED UP AND DISPOSED OF AND THE TANK REMOVED.

LEGEND

CELL A	CELL DESIGNATION & GENERAL ORDER OF FILL
C-26 ▲	CONE PENETROMETER LOCATIONS PERFORMED BY WOODWARD-CLYDE CONSULTANTS
B-34 ⊕	BORING LOCATIONS DRILLED BY WOODWARD-CLYDE CONSULTANTS
MW-6 ■	MONITORING WELL
T-1	TEMPORARY MONITORING WELL TO BE PLUGGED AND ABANDONED DURING NEXT PHASE

SEE FIGURE 31C-R FOR MONITORING WELL NOTES

STATE OF LOUISIANA
STEPHEN J. BURNHAM
REG. NO. 24029
REGISTERED PROFESSIONAL ENGINEER IN CIVIL ENGINEERING
4/10/08

Note:
This drawing was originally prepared by and remains the work product of Mader-Miers Engineering/Paul L. Miers, P.E. Revisions to this drawing that are the work product of Engineering Associates/Stephen J. Burnham, P.E. are specifically noted as such hereon.

ORIGINAL DRAWING PREPARED UNDER SUPERVISION OF PAUL L MIERS, ON MARCH 24, 2003. ANY REVISIONS MADE TO THE SITE OR DRAWINGS AFTER MARCH 24, 2003 ARE NOT THE RESPONSIBILITY OF PAUL L MIERS, PAUL L MIERS, ENGINEERING, LLC, OR MADER MIERS ENGINEERING, INC. BY ATTACHING SEAL AND SIGNING THIS DRAWING I AM VERIFYING THAT THE ORIGINAL DRAWING WAS PREPARED UNDER MY DIRECTION.

STATE OF LOUISIANA
PAUL L. MIERS
REG. No. 20741
REGISTERED PROFESSIONAL ENGINEER IN CIVIL ENGINEERING

4-9-08

PAUL L. MIERS P.E. REG. NO. 20741

ELEVATIONS AND BOUNDARY INFORMATION TAKEN FROM SURVEY PREPARED BY DUFRENE SURVEYING AND ENGINEERING, INC. DATED MAY 23, 1993 AND LAST REVISED 6-26-93

DATE	DESCRIPTION	BY
4-27-99	SHOW LEACHATE TREATMENT POND & TEMPORARY STORAGE TANK	JPM/PLM
1-12-99	NEW OPERATIONS AREA, MONITORING WELLS & ACCESS ROAD	JEM/PLM

REVISED

FIGURE 30C
INITIAL SITE PLAN

RIVER BIRCH LANDFILL
RIVER BIRCH LANDFILL, INC.

mader-miers
ENGINEERING, INC
3909 W. CONGRESS ST., SUITE 101 - LAFAYETTE, LOUISIANA 70506
PHONE NO. (337) 989-8047 FAX (337) 988-3219

STATE OF LOUISIANA
PAUL L. MIERS
REG. No. 20741
REGISTERED PROFESSIONAL ENGINEER IN CIVIL ENGINEERING

Date of Survey:	Book:	Page:	ENGINEER PLM	CHECKED PLM
			DRAWN BY JEM	APPROVED PLM
			BPN 2063	SPN 05

FILE D DWG

PART OF SECTIONS 4, 6, 36 AND 37
T 13 S, R 22 E, SOUTHEASTERN LAND
DISTRICT OF LOUISIANA WEST OF THE
MISSISSIPPI RIVER, WAGGAMAN
JEFFERSON PARISH, LOUISIANA

ORIGINAL DRAWING PREPARED UNDER SUPERVISION OF PAUL L MIERS, ON MARCH 24, 2003. ANY REVISIONS MADE TO THE SITE OR DRAWINGS AFTER MARCH 24, 2003 ARE NOT THE RESPONSIBILITY OF PAUL L MIERS, PAUL L MIERS, ENGINEERING, LLC, OR MADER MIERS ENGINEERING, INC. BY ATTACHING SEAL AND SIGNING THIS DRAWING I AM VERIFYING THAT THE ORIGINAL DRAWING WAS PREPARED UNDER MY DIRECTION.

4-9-08
PAUL L. MIERS, P.E. REG. NO. 20741

STATE OF LOUISIANA
PAUL L. MIERS
REG. No. 20741
REGISTERED PROFESSIONAL ENGINEER IN ENVIRONMENTAL ENGINEERING

SCALE 1" = 300'

0 150 300 450 600
SCALE

* THE LOCATION AND NUMBER OF GAS WELLS WITHIN THE LANDFILL SHALL BE ESTABLISHED BASED ON SITE-SPECIFIC CONDITIONS.

LEGEND

34	CELL DESIGNATION & GENERAL ORDER OF FILL
C-26	CONE PENETROMETER LOCATIONS PERFORMED BY WOODWARD-CLYDE CONSULTANTS
B-34	BORING LOCATIONS DRILLED BY WOODWARD-CLYDE CONSULTANTS
MW-6	MONITORING WELL
	LEACHATE & PRESURE RELIEF SUMPS SUMP NUMBER CORRESPONDS TO CELL NUMBER
B-40	BORING LOCATIONS DRILLED BY EUSTIS ENGINEERING
C-39	CONE PENETROMETER LOCATIONS PERFORMED BY EUSTIS ENGINEERING

Note:
This drawing was originally prepared by and remains the work product of Mader-Miers Engineering/Paul L. Miers, P.E. Revisions to this drawing that are the work product of Engineering Associates/Stephen J. Burnham, P.E. are specifically noted as such hereon.

LEGEND

PHASE I : INSTALL MW 1 - MW 6 AND T1 - T 3
PHASE II A : INSTALL MW 7
PHASE II : PLUG & ABANDON T 1 - T 3 AND INSTALL T 4 - T 6
PHASE III : PLUG & ABANDON T 4 - T 6 AND INSTALL T 7 - T 9 AND MW 8 - MW 15
PHASE IV : PLUG & ABANDON T 7 - T 9, MW - 1, MW 15, AND INSTALL MW 16 - MW 27
PHASE V : PLUG & ABANDON MW - 6 AMD MW 11

BOUNDARY INFORMATION TAKEN FROM

1.) SURVEY PREPARED BY DUFRENE SURVEYING AND ENGINEERING, INC. DATED MAY 23, 1993 AND LAST REVISED 6-26-93

2.) RESUBDIVISION OF A PORTION OF SECTION 4 TOWNSHIP 13 SOUTH, RANGE 22 EAST, SOUTHEASTERN DISTRICT OF LOUISIANA, WEST OF THE MISSISSIPPI RIVER, WAGGAMAN INTO LOTS SK-1, SK-2, AND SK-3 PREPARED BY DUFRENE SURVEYING AND ENGINEERING, INC. JUNE 17, 2002

DATE	DESCRIPTION	BY
3/19/03	MODIFICATION NO. 7	
2/29/00	REVISED DISCHARGE POINT NUMBERS AND EXTERIOR PERIMETER DITCH OUTFALL LOCATION	
4/27/99	REVISED FIGURE REFERENCES	

REVISED

FIGURE 31
OVERALL SITE PLAN

RIVER BIRCH LANDFILL
RIVER BIRCH LANDFILL, INC.

mader-miers
ENGINEERING, INC
3909 W. CONGRESS ST., SUITE 101 - LAFAYETTE, LOUISIANA 70506
PHONE NO. (337) 989-8047 FAX (337) 988-3219

STATE OF LOUISIANA
STEPHEN J. BURNHAM
REG. No. 24029
REGISTERED PROFESSIONAL ENGINEER IN CIVIL ENGINEERING
4/16/08

Date of Survey:	Book:	Page:	ENGINEER P.L.M.	CHECKED P.L.M.
			DRAWN BY R.T.G.	APPROVED P.L.M.
			BPN 2063	SPN 12

FILE D DWG

PART OF SECTIONS 4, 6, 36 AND 37
T 13 S, R 22 E, SOUTHEASTERN LAND
DISTRICT OF LOUISIANA WEST OF THE
MISSISSIPPI RIVER, WAGGAMAN
JEFFERSON PARISH, LOUISIANA

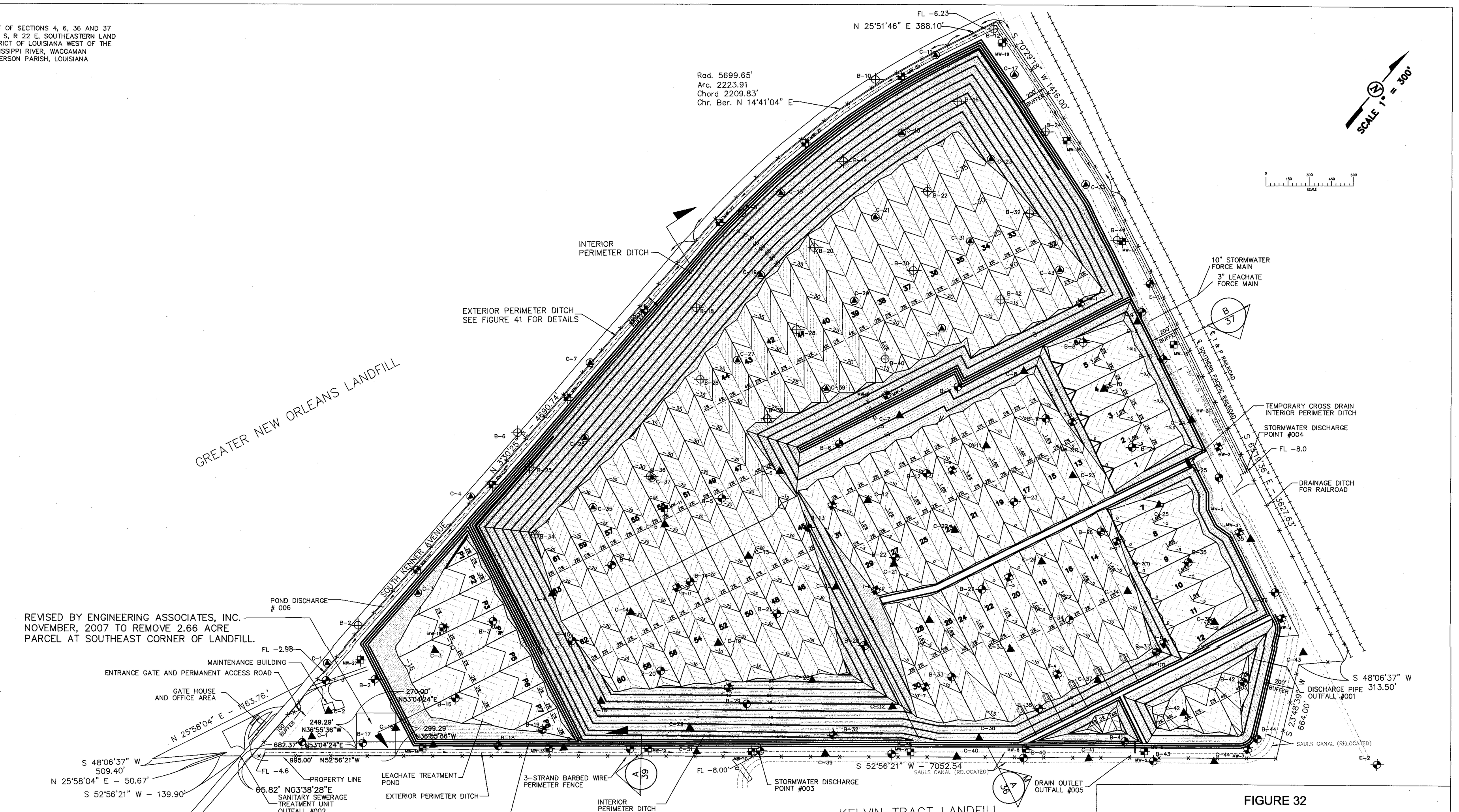

REVISED BY ENGINEERING ASSOCIATES, INC.
NOVEMBER, 2007 TO REMOVE 2.66 ACRE
PARCEL AT SOUTHEAST CORNER OF LANDFILL.

LEGEND

34	CELL DESIGNATION & GENERAL ORDER OF FILL
C-26	CONE PENETROMETER LOCATIONS PERFORMED BY WOODWARD-CLYDE CONSULTANTS
B-34	BORING LOCATIONS DRILLED BY WOODWARD-CLYDE CONSULTANTS
MW-6	MONITORING WELL
	LEACHATE & PRESURE RELIEF SUMPS SUMP NUMBER CORRESPONDS TO CELL NUMBER
B-40	BORING LOCATIONS DRILLED BY EUSTIS ENGINEERING
C-39	CONE PENETROMETER LOCATIONS PERFORMED BY EUSTIS ENGINEERING

Note:
This drawing was originally prepared by and remains the work product of Mader-Miers Engineering/Paul L. Miers, P.E. Revisions to this drawing that are the work product of Engineering Associates/Stephen J. Burnham, P.E. are specifically noted as such hereon.

ORIGINAL DRAWING PREPARED UNDER SUPERVISION OF PAUL L MIERS, ON SEPTEMBER 29, 2003. ANY REVISIONS MADE TO THE SITE OR DRAWINGS AFTER SEPTEMBER 29, 2003 ARE NOT THE RESPONSIBILITY OF PAUL L MIERS, PAUL L MIERS, ENGINEERING, LLC, OR MADER MIERS ENGINEERING, INC. BY ATTACHING SEAL AND SIGNING THIS DRAWING I AM VERIFYING THAT THE ORIGINAL DRAWING WAS PREPARED UNDER MY DIRECTION.

STATE OF LOUISIANA
PAUL L. MIERS
REG. No. 20741
REGISTERED PROFESSIONAL ENGINEER IN ENVIRONMENTAL ENGINEERING

PAUL L MIERS, P.E. REG. NO. 20741 4-9-08

BOUNDARY INFORMATION TAKEN FROM

1.) SURVEY PREPARED BY DUFRENE SURVEYING AND ENGINEERING, INC. DATED MAY 23, 1993 AND LAST REVISED 6-26-93

2.) RESUBDIVISION OF A PORTION OF SECTION 4 TOWNSHIP 13 SOUTH, RANGE 22 EAST, SOUTHEASTERN DISTRICT OF LOUISIANA, WEST OF THE MISSISSIPPI RIVER, WAGGAMAN INTO LOTS SK-1, SK-2, AND SK-3 PREPARED BY DUFRENE SURVEYING AND ENGINEERING, INC. JUNE 17, 2002

DATE	DESCRIPTION	BY
9/26/03	REVISED TO ADDRESS NOD MOD. NO. 7	
3/19/03	MODIFICATION NO. 7	
2/29/00	REVISED DISCHARGE POINT NUMBERS AND EXTERIOR PERIMETER DITCH OUTFALL LOCATION	
4/27/99	REVISED FIGURE REFERENCES	

REVISED

FIGURE 32
OVERALL SITE EXCAVATION PLAN

RIVER BIRCH LANDFILL
RIVER BIRCH LANDFILL, INC.

PAUL L. MIERS ENGINEERING, LLC

CIVIL ENGINEERS — LAND SURVEYORS
104 WESTMARK BLVD, SUITE 2A
PHONE (337) 981-7792
LAFAYETTE, LOUISIANA 70506
FAX(337) 981-7797

STATE OF LOUISIANA
STEPHEN J. BURNHAM
REG. No. 24029
REGISTERED PROFESSIONAL ENGINEER IN CIVIL ENGINEERING
4/10/08

Date of Survey:	Book:	Page:	ENGINEER P.L.M.	CHECKED P.L.M.
			DRAWN BY R.T.G.	APPROVED P.L.M.
			PRN 2063	SPN 12

PART OF SECTIONS 4, 6, 36 AND 37
T 13 S, R 22 E, SOUTHEASTERN LAND
DISTRICT OF LOUISIANA WEST OF THE
MISSISSIPPI RIVER, WAGGAMAN
JEFFERSON PARISH, LOUISIANA

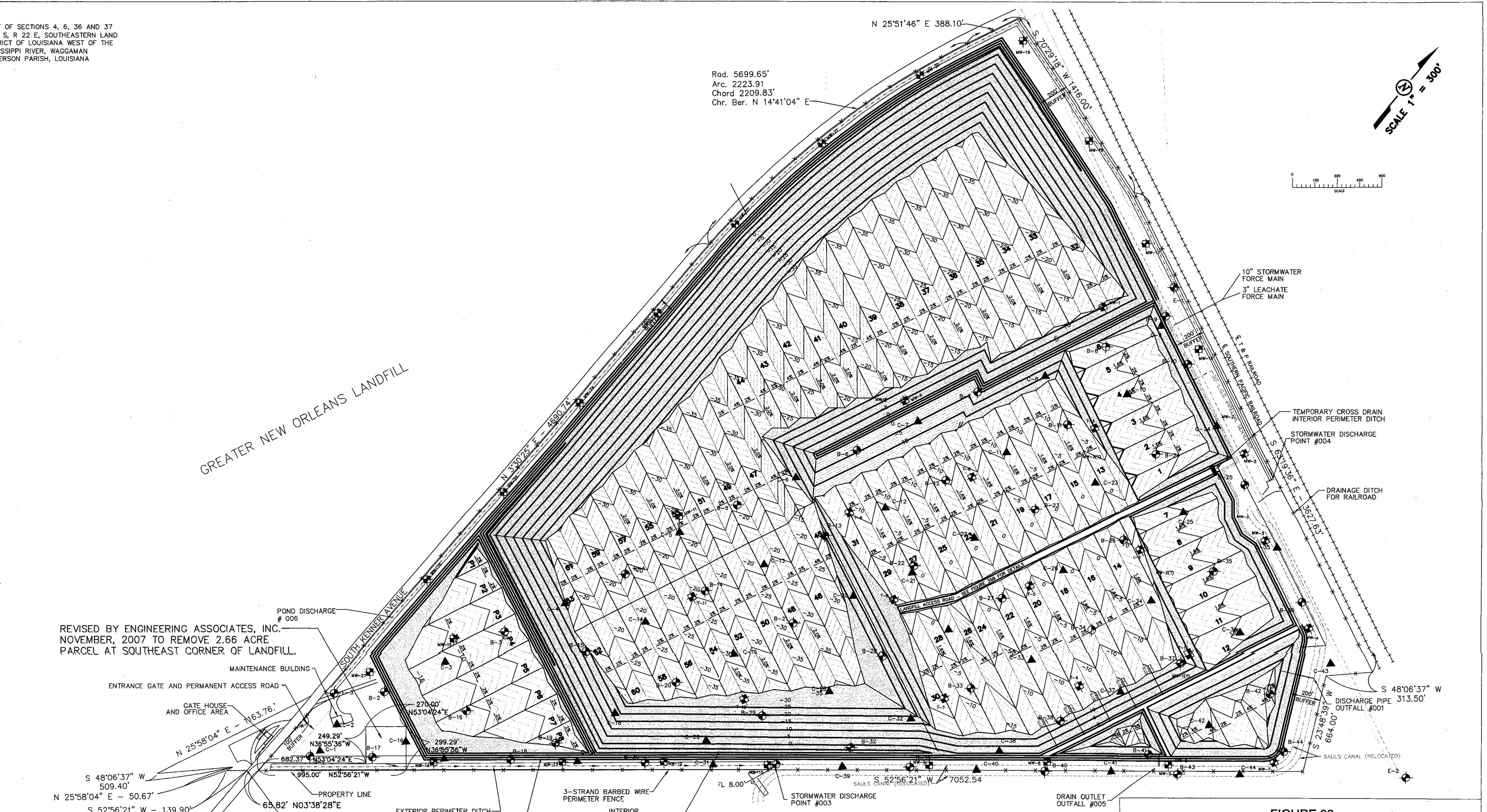

LEGEND

34	CELL DESIGNATION & GENERAL ORDER OF FILL
C-26	CONE PENETROMETER LOCATIONS PERFORMED BY WOODWARD-CLYDE CONSULTANTS
B-34	BORING LOCATIONS DRILLED BY WOODWARD-CLYDE CONSULTANTS
MW-6	MONITORING WELL
	LEACHATE & PRESURE RELIEF SUMPS SUMP NUMBER CORRESPONDS TO CELL NUMBER

ORIGINAL DRAWING PREPARED UNDER SUPERVISION OF PAUL L MIERS, ON MARCH 24, 2003. ANY REVISIONS MADE TO THE SITE OR DRAWINGS AFTER MARCH 24, 2003 ARE NOT THE RESPONSIBILITY OF PAUL L MIERS, PAUL L MIERS, ENGINEERING, LLC, OR MADER MIERS ENGINEERING, INC. BY ATTACHING SEAL AND SIGNING THIS DRAWING I AM VERIFYING THAT THE ORIGINAL DRAWING WAS PREPARED UNDER MY DIRECTION.

4-9-08
PAUL L MIERS, P.E. REG. NO. 20741

STATE OF LOUISIANA
PAUL L. MIERS
REG. No. 20741
REGISTERED PROFESSIONAL ENGINEER IN ENVIRONMENTAL ENGINEERING

Note:
This drawing was originally prepared by and remains the work product of Mader-Miers Engineering/Paul L. Miers, P.E. Revisions to this drawing that are the work product of Engineering Associates/Stephen J. Burnham, P.E. are specifically noted as such hereon.

BOUNDARY INFORMATION TAKEN FROM

1.) SURVEY PREPARED BY DUFRENE SURVEYING AND ENGINEERING, INC. DATED MAY 23, 1993 AND LAST REVISED 6-26-93

2.) RESUBDIVISION OF A PORTION OF SECTION 4 TOWNSHIP 13 SOUTH, RANGE 22 EAST, SOUTHEASTERN DISTRICT OF LOUISIANA, WEST OF THE MISSISSIPPI RIVER, WAGGAMAN INTO LOTS SK-1, SK-2, AND SK-3 PREPARED BY DUFRENE SURVEYING AND ENGINEERING, INC. JUNE 17, 2002

DATE	DESCRIPTION	BY
3/19/03	MODIFICATION NO. 7	
2/29/00	REVISED DISCHARGE POINT NUMBERS AND EXTERIOR PERIMETER DITCH OUTFALL LOCATION	
4/27/99	REVISED FIGURE REFERENCES	

REVISED

FIGURE 33
OVERALL SITE TOP OF CLAY LINER PLAN

RIVER BIRCH LANDFILL
RIVER BIRCH LANDFILL, INC.

mader-miers
ENGINEERING, INC
3908 W. CONGRESS ST., SUITE 101 - LAFAYETTE, LOUISIANA 70506
PHONE NO. (337) 989-8047 FAX (337) 988-3319

STEPHEN J. BURNHAM
REG. No. 24029
REGISTERED PROFESSIONAL ENGINEER IN CIVIL ENGINEERING
4/10/08

Date of Survey:	Book:	Page:	ENGINEER P.L.M.	CHECKED P.L.M.
			DRAWN BY R.T.G.	APPROVED P.L.M.
			BPN 2063	SPN 12

FILE D DWG

PART OF SECTIONS 4, 6, 36 AND 37
T 13 S, R 22 E, SOUTHEASTERN LAND
DISTRICT OF LOUISIANA WEST OF THE
MISSISSIPPI RIVER, WAGGAMAN
JEFFERSON PARISH, LOUISIANA

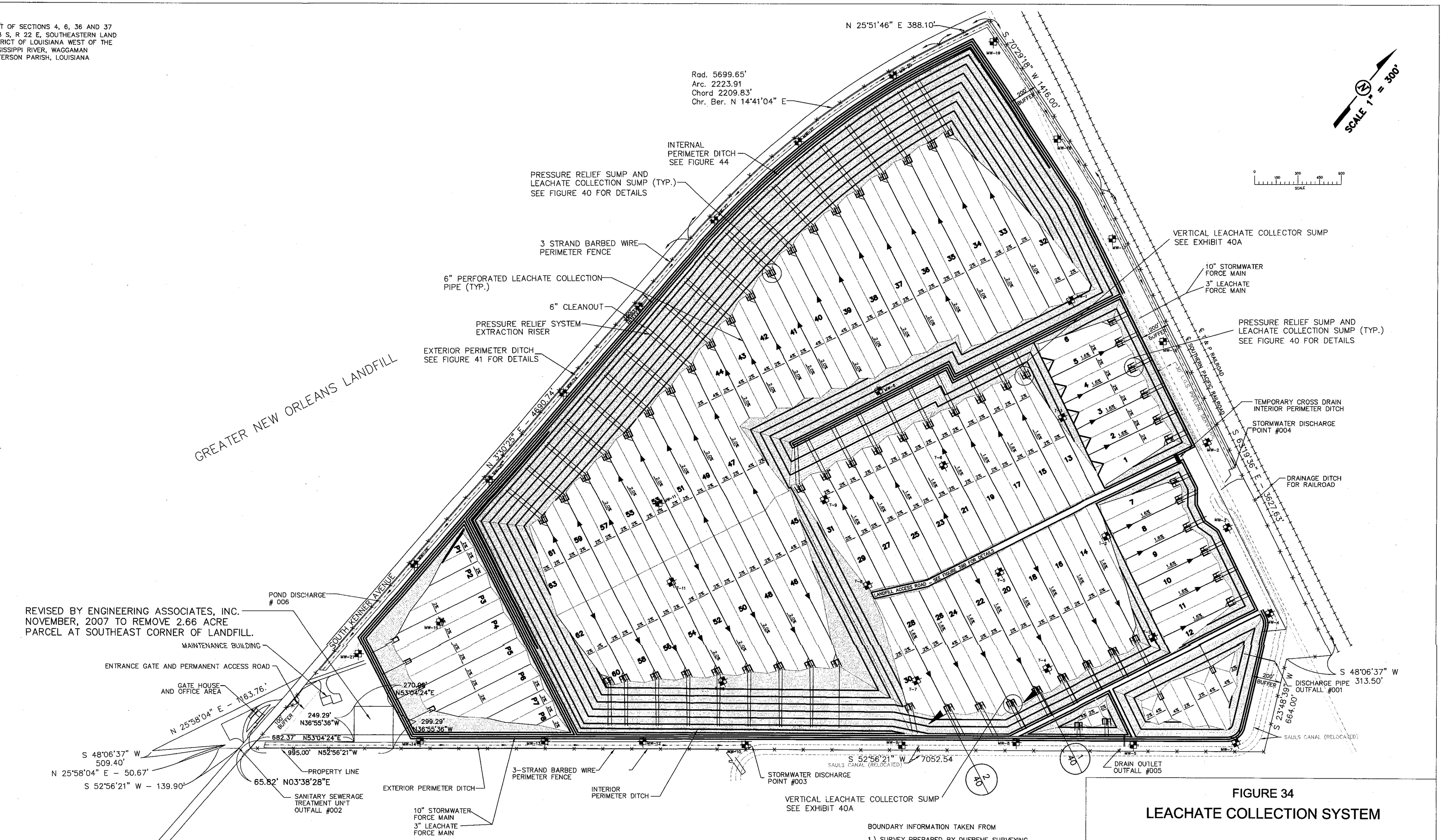

ORIGINAL DRAWING PREPARED UNDER SUPERVISION OF PAUL L. MIERS, ON SEPTEMBER 29, 2003. ANY REVISIONS MADE TO THE SITE OR DRAWINGS AFTER SEPTEMBER 29, 2003 ARE NOT THE RESPONSIBILITY OF PAUL L MIERS, PAUL L MIERS, ENGINEERING, LLC, OR MADER MIERS ENGINEERING, INC. BY ATTACHING SEAL AND SIGNING THIS DRAWING I AM VERIFYING THAT THE ORIGINAL DRAWING WAS PREPARED UNDER MY DIRECTION.

STATE OF LOUISIANA PAUL L. MIERS REG. No. 20741 PROFESSIONAL ENGINEER

4-9-08

PAUL L MIERS, P.E. REG. NO. 20741

Note:
This drawing was originally prepared by and remains the work product of Mader-Miers Engineering/Paul L. Miers, P.E. Revisions to this drawing that are the work product of Engineering Associates/Stephen J. Burnham, P.E. are specifically noted as such hereon.

BOUNDARY INFORMATION TAKEN FROM

1.) SURVEY PREPARED BY DUFRENE SURVEYING AND ENGINEERING, INC. DATED MAY 23, 1993 AND LAST REVISED 6-26-93

2.) RESUBDIVISION OF A PORTION OF SECTION 4 TOWNSHIP 13 SOUTH, RANGE 22 EAST, SOUTHEASTERN DISTRICT OF LOUISIANA, WEST OF THE MISSISSIPPI RIVER, WAGGAMAN INTO LOTS SK-1, SK-2, AND SK-3 PREPARED BY DUFRENE SURVEYING AND ENGINEERING, INC. JUNE 17, 2002

DATE	DESCRIPTION	BY
9/26/03	REVISED TO ADDRESS NOD MOD. NO. 7	
3/19/03	MODIFICATION NO. 7	
2/29/00	REVISED DISCHARGE POINT NUMBERS AND EXTERIOR PERIMETER DITCH OUTFALL LOCATION	
4/27/99	REVISED FIGURE REFERENCES	

REVISED

FIGURE 34
LEACHATE COLLECTION SYSTEM

RIVER BIRCH LANDFILL
RIVER BIRCH LANDFILL, INC.

PAUL L. MIERS ENGINEERING, LLC
CIVIL ENGINEERS — LAND SURVEYORS
104 WESTMARK BLVD, SUITE 2A
PHONE (337) 981-7792
LAFAYETTE, LOUISIANA 70506
FAX(337) 981-7797

Date of Survey:	Book:	Page:	ENGINEER P.L.M.	CHECKED P.L.M.
			DRAWN BY R.T.G.	APPROVED P.L.M.
			DRN. 2063	DWG. 12

STATE OF LOUISIANA STEPHEN J. BURNHAM REG. No. 24029 REGISTERED PROFESSIONAL ENGINEER CIVIL ENGINEERING

4/10/08

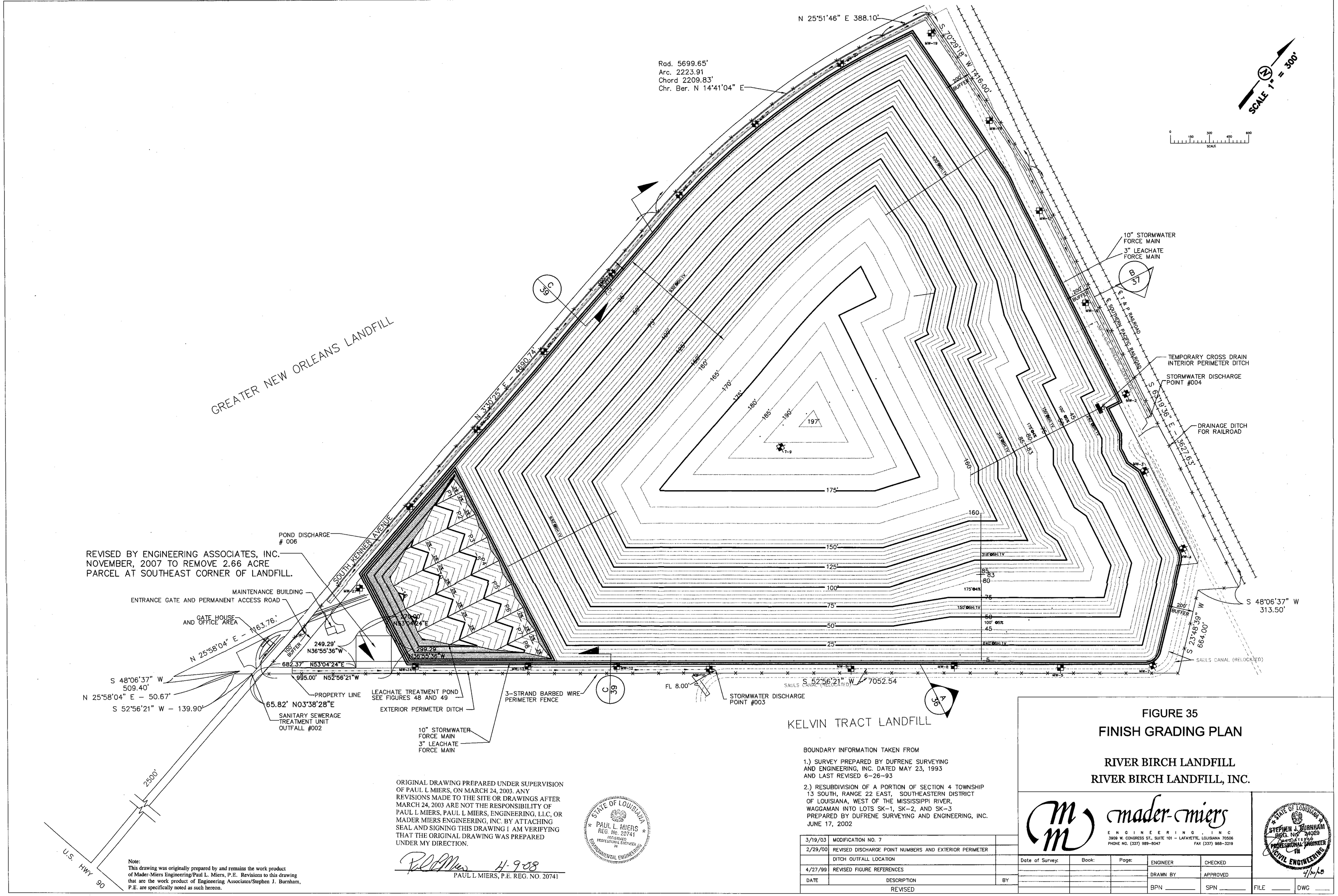

Note:
This drawing was originally prepared by and remains the work product of Mader-Miers Engineering/Paul L. Miers, P.E. Revisions to this drawing that are the work product of Engineering Associates/Stephen J. Burnham, P.E. are specifically noted as such hereon.

ORIGINAL DRAWING PREPARED UNDER SUPERVISION OF PAUL L MIERS, ON MARCH 24, 2003. ANY REVISIONS MADE TO THE SITE OR DRAWINGS AFTER MARCH 24, 2003 ARE NOT THE RESPONSIBILITY OF PAUL L MIERS, PAUL L MIERS, ENGINEERING, LLC, OR MADER MIERS ENGINEERING, INC. BY ATTACHING SEAL AND SIGNING THIS DRAWING I AM VERIFYING THAT THE ORIGINAL DRAWING WAS PREPARED UNDER MY DIRECTION.

4-9-08
PAUL L MIERS, P.E. REG. NO. 20741

STATE OF LOUISIANA
PAUL L. MIERS
REG. No. 20741
REGISTERED PROFESSIONAL ENGINEER IN ENVIRONMENTAL ENGINEERING

BOUNDARY INFORMATION TAKEN FROM

1.) SURVEY PREPARED BY DUFRENE SURVEYING AND ENGINEERING, INC. DATED MAY 23, 1993 AND LAST REVISED 6-26-93

2.) RESUBDIVISION OF A PORTION OF SECTION 4 TOWNSHIP 13 SOUTH, RANGE 22 EAST, SOUTHEASTERN DISTRICT OF LOUISIANA, WEST OF THE MISSISSIPPI RIVER, WAGGAMAN INTO LOTS SK-1, SK-2, AND SK-3 PREPARED BY DUFRENE SURVEYING AND ENGINEERING, INC. JUNE 17, 2002

DATE	DESCRIPTION	BY
3/19/03	MODIFICATION NO. 7	
2/29/00	REVISED DISCHARGE POINT NUMBERS AND EXTERIOR PERIMETER	
	DITCH OUTFALL LOCATION	
4/27/99	REVISED FIGURE REFERENCES	

REVISED

FIGURE 35
FINISH GRADING PLAN

RIVER BIRCH LANDFILL
RIVER BIRCH LANDFILL, INC.

mader-miers
ENGINEERING INC
3909 W. CONGRESS ST., SUITE 101 - LAFAYETTE, LOUISIANA 70506
PHONE NO. (337) 989-8047 FAX (337) 988-3219

STATE OF LOUISIANA
STEPHEN J. BURNHAM
REG. No. 24029
REGISTERED PROFESSIONAL ENGINEER IN CIVIL ENGINEERING
4/9/08

Date of Survey:	Book:	Page:	ENGINEER	CHECKED
			DRAWN BY	APPROVED
			BPN	SPN

FILE DWG

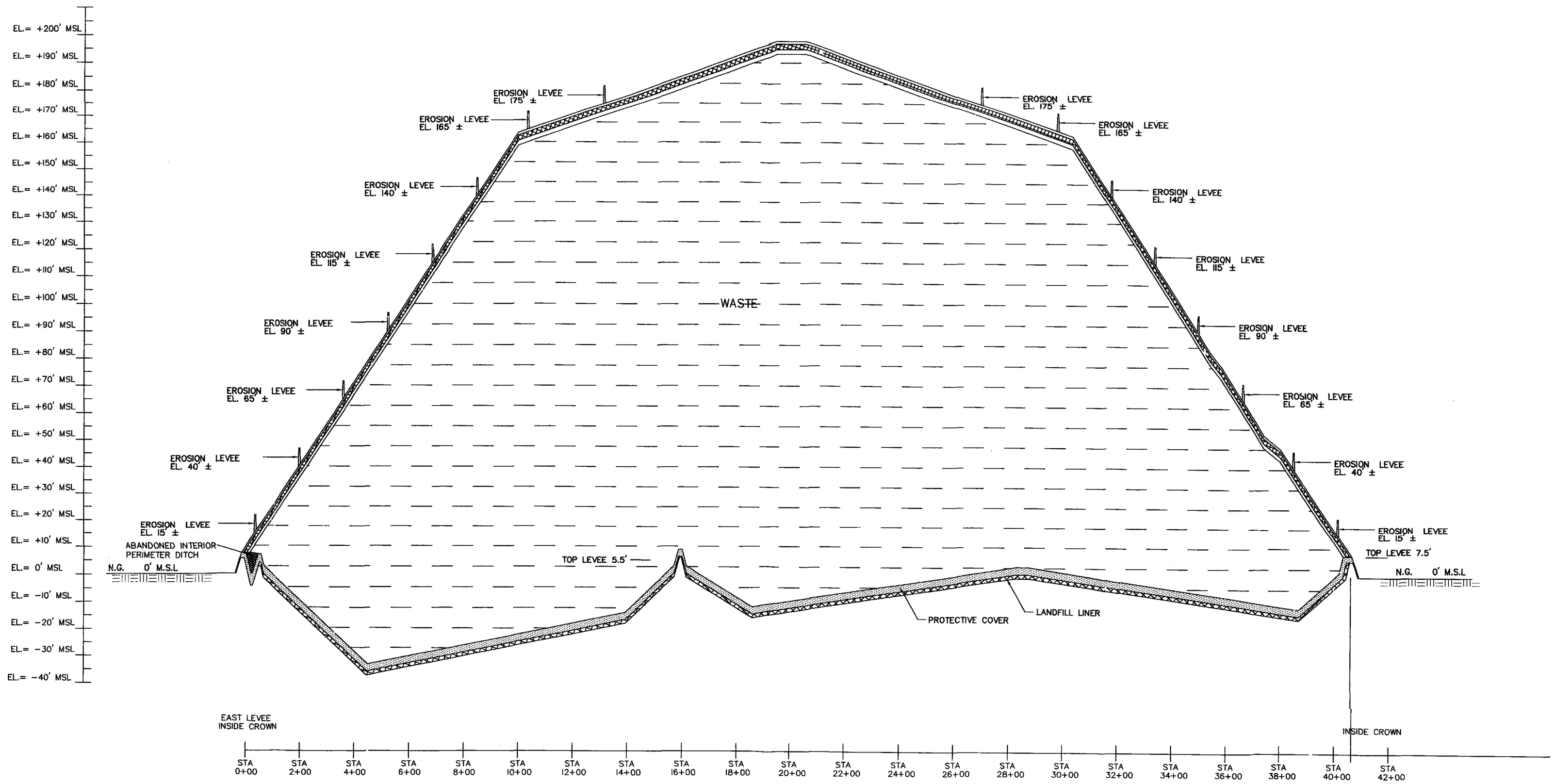

EAST WEST SECTION A

HORZ SCALE 1" = 100'
VERT SCAEL 1" = 20'

SECTION REFERENCED FROM FIGURES 32, 33 AND 35
SECTION SHOWN IS COMPOSIT AND NOT ALL
IMPROVEMENTS OR PRESENT ON EACH BASE FIGURE

DATE	DESCRIPTION	BY
9/28/03	REVISED TO ADDRESS NOD MOD. NO. 7	

FIGURE 36
TYPICAL LANDFILL SECTION
EAST WEST SECTION A

RIVER BIRCH LANDFILL

RIVER BIRCH LANDFILL, INC.

PAUL L. MIERS ENGINEERING, LLC
CIVIL ENGINEERS
LAND SURVEYORS
104 WESTMARK BLVD, SUITE 2A
PHONE (337) 981-7792
LAFAYETTE, LOUISIANA 70506
FAX(337) 981-7797

Date of Survey:	Book:	Page:	ENGINEER P.L.M.	CHECKED P.L.M.
			DRAWN BY R.T.G.	APPROVED P.L.M.

STATE OF LOUISIANA
PAUL L. MIERS
REG. No. 20741
REGISTERED PROFESSIONAL ENGINEER
CIVIL ENGINEERING
9-28-03

c:\2063\12\DWG\2063\fig35_section.dwg Mon Sep 29 11:55:53 2003

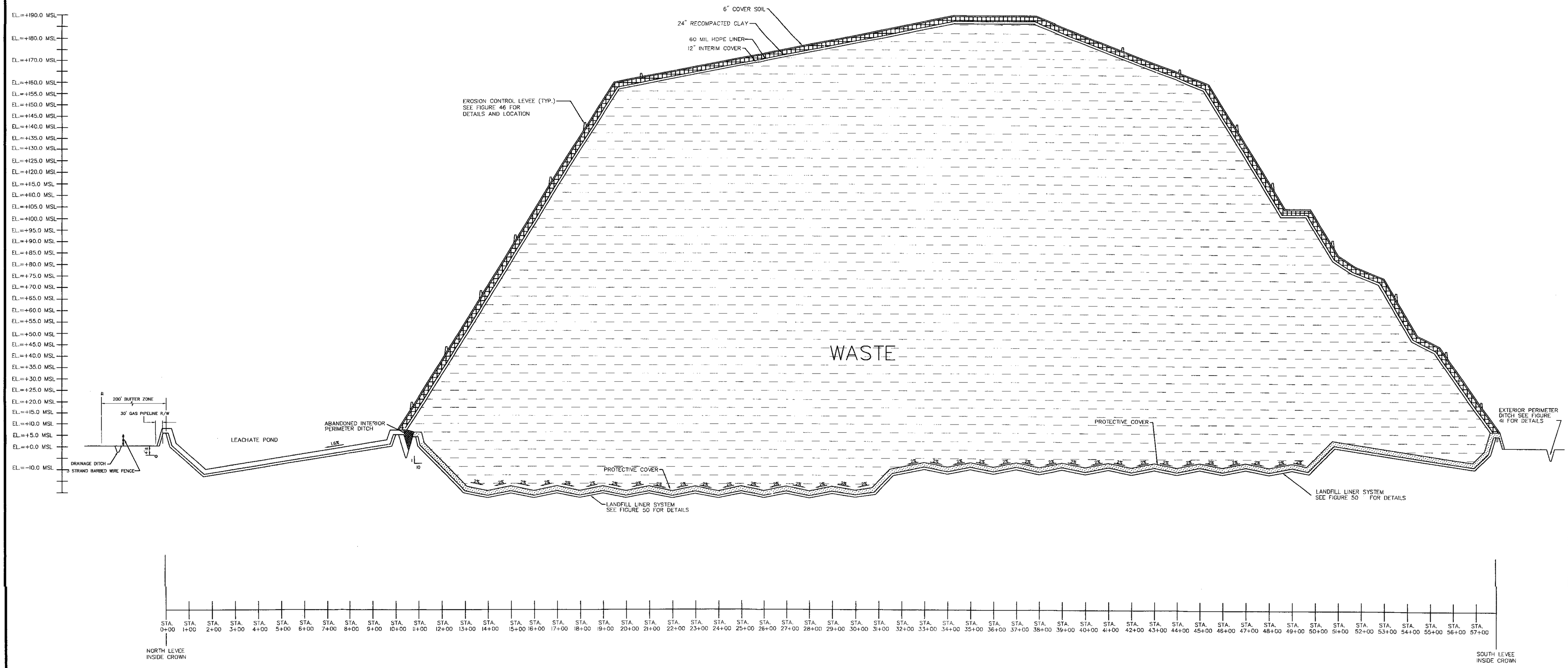

NORTH SOUTH SECTION B

HORIZONTAL SCALE: 1" = 200'
VERTICAL SCALE: 1" = 20'

SECTION REFERENCED FROM FIGURES 32, 33 AND 35.
SECTION SHOWN IS COMPOSITE AND NOT ALL IMPROVEMENTS ARE PRESENT ON EACH BASE FIGURE. LEACHATE AND PRESSURE RELIEF TRENCHES ARE NOT SHOWN FOR CLARITY. SEE FIGURE 50-R FOR DETAILS.

FIGURE 37
TYPICAL LANDFILL SECTION
NORTH SOUTH SECTION B

RIVER BIRCH LANDFILL

RIVER BIRCH LANDFILL, INC.

DATE	DESCRIPTION	BY
9/26/03	REVISED TO ADDRESS NOD MOD. NO. 7	

REVISED

PAUL L. MIERS ENGINEERING, LLC
CIVIL ENGINEERS — LAND SURVEYORS
104 WESTMARK BLVD, SUITE 2A
PHONE (337) 981-7792
LAFAYETTE, LOUISIANA 70508
FAX(337) 981-7797

Date of Survey:	Book:	Page:	ENGINEER P.L.M.	CHECKED P.L.M.
			DRAWN BY R.T.G.	APPROVED P.L.M.
			RPN 2063	SPN 12

STATE OF LOUISIANA — PAUL L. MIERS REG. No. 20741 REGISTERED PROFESSIONAL ENGINEER — CIVIL ENGINEERING

FILE D DWG

K:\2063\12\DWG\2063\fig37c-r.dwg Mon Sep 29 11:56:26 2003

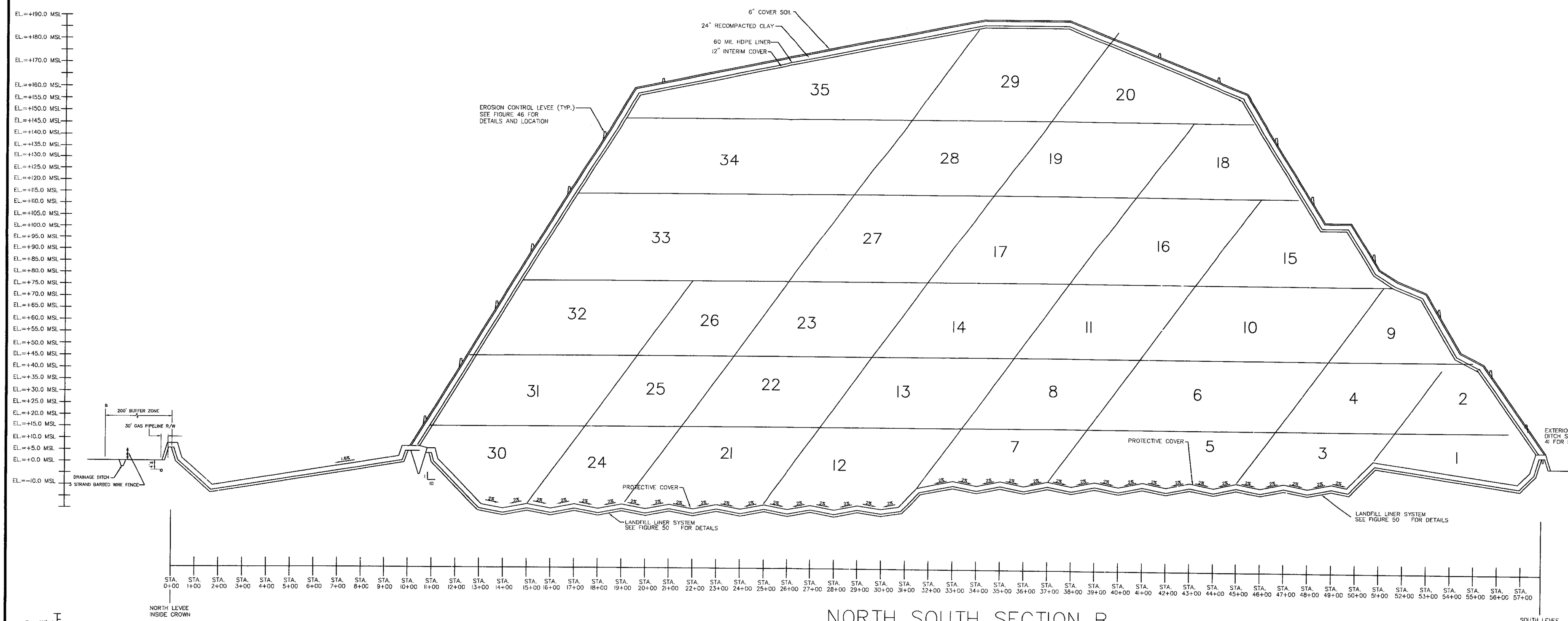

NORTH SOUTH SECTION B

HORIZONTAL SCALE: 1" = 200'
VERTICAL SCALE: 1" = 20'

SECTION REFERENCED FROM FIGURES 32, 33 AND 35. SECTION SHOWN IS COMPOSITE AND NOT ALL IMPROVEMENTS ARE PRESENT ON EACH BASE FIGURE. LEACHATE AND PRESSURE RELIEF TRENCHES ARE NOT SHOWN FOR CLARITY. SEE FIGURE 50 FOR DETAILS.

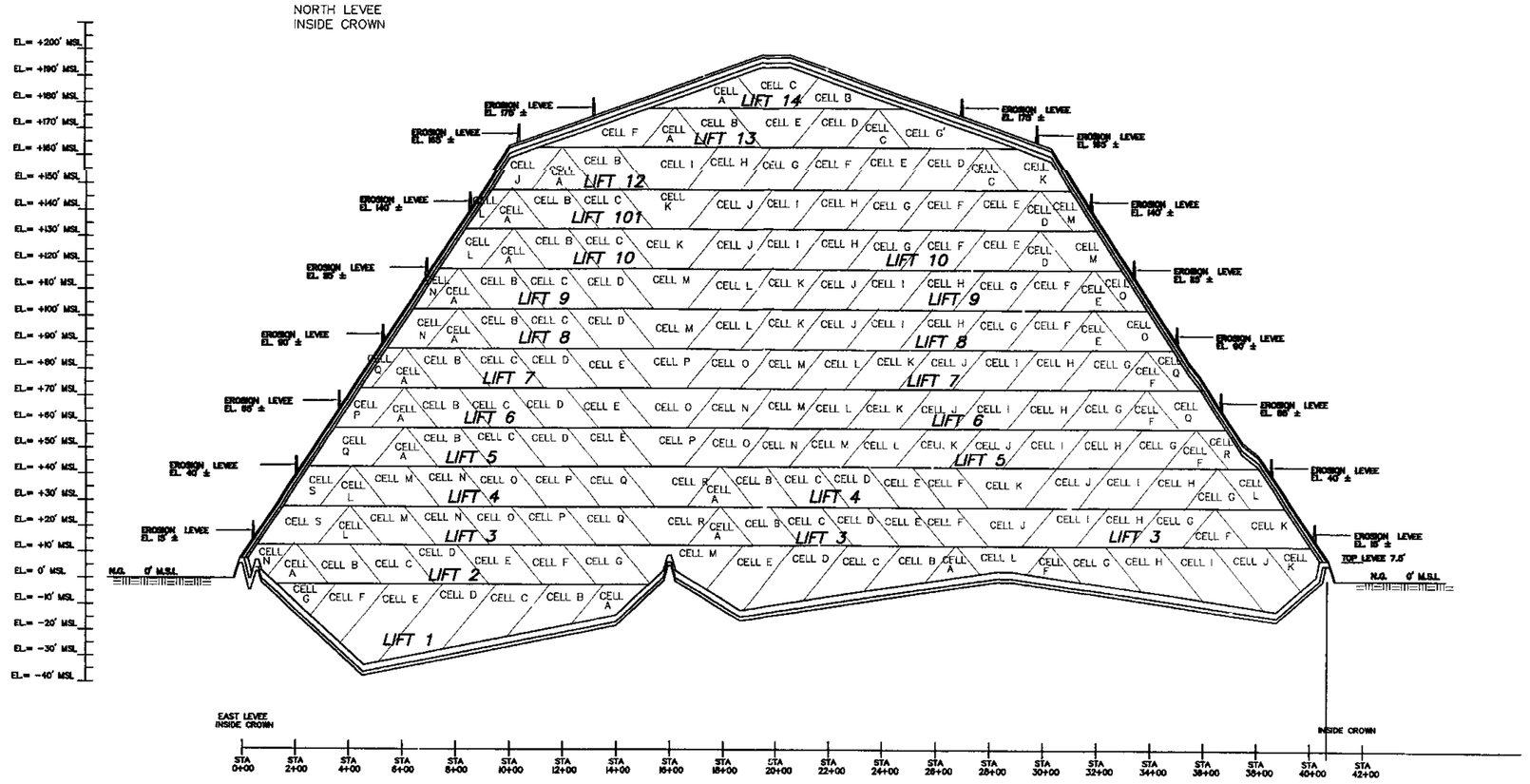

EAST WEST SECTION A

HORZ SCALE 1" = 400'
VERT SCALE 1" = 40'

SECTION REFERENCED FROM FIGURES 32, 33 AND 35
SECTION SHOWN IS COMPOSITE AND NOT ALL IMPROVEMENTS OR PRESENT ON EACH BASE FIGURE

FIGURE 38
TYPICAL LANDFILL SECTIONS FILLING SEQUENCE

RIVER BIRCH LANDFILL
RIVER BIRCH LANDFILL, INC.

PAUL L. MIERS ENGINEERING, LLC
CIVIL ENGINEERS — LAND SURVEYORS
104 WESTMARK BLVD, SUITE 2A
PHONE (337) 981-7792
LAFAYETTE, LOUISIANA 70506
FAX(337) 981-7797

STATE OF LOUISIANA — PAUL L. MIERS REG. No. 20741 REGISTERED PROFESSIONAL ENGINEER IN CIVIL ENGINEERING

DATE	DESCRIPTION	BY
9/26/03	REVISED TO ADDRESS NOD MOD. NO. 7	

Date of Survey:	Book:	Page:	ENGINEER P.L.M.	CHECKED P.L.M.
			DRAWN BY R.T.G.	APPROVED P.L.M.

k:\2003\12\DWG\2063\Fig38-1.dwg Mon Sep 29 11:57:13 2003

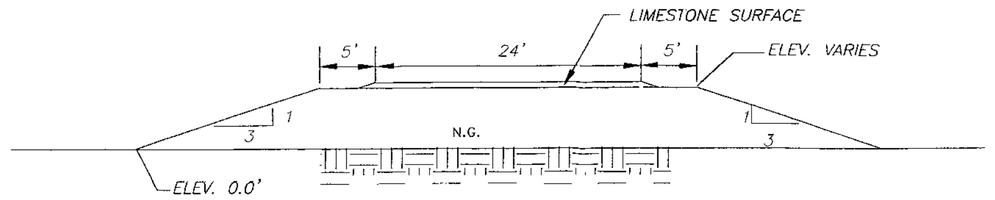

PHASE 1

NOTE: ACCESS ROAD – ELEV. 1' TO 3' M.S.L.
ACCESS LEVEE – ELEV. 5.5' M.S.L.

**CONSTRUCTION NOTES

1. EXCAVATE AND REMOVE SYNTHETICS LINERS FROM ANCHOR TRENCH.
2. REMOVE ROAD MATERIAL.
3. EXTEND 12" RECOMPACTED CLAY LINER ACROSS TOP OF ROAD.
4. EXTEND EACH LAYER OF SYNTHETIC ACROSS TOP OF ROAD AND TIE TO LINER ON EACH SIDE OF ROAD.
5. PLACE 24" OF PROTECTIVE COVER OVER TOP OF LINER SYSTEM.

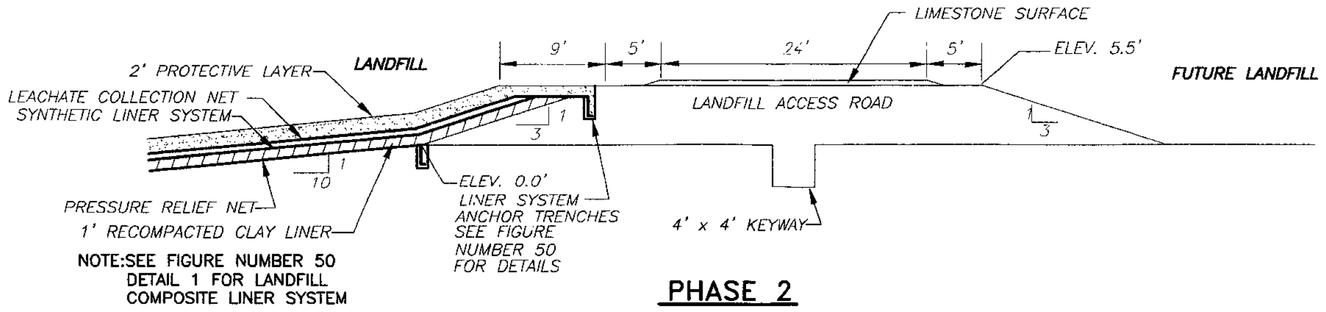

PHASE 2

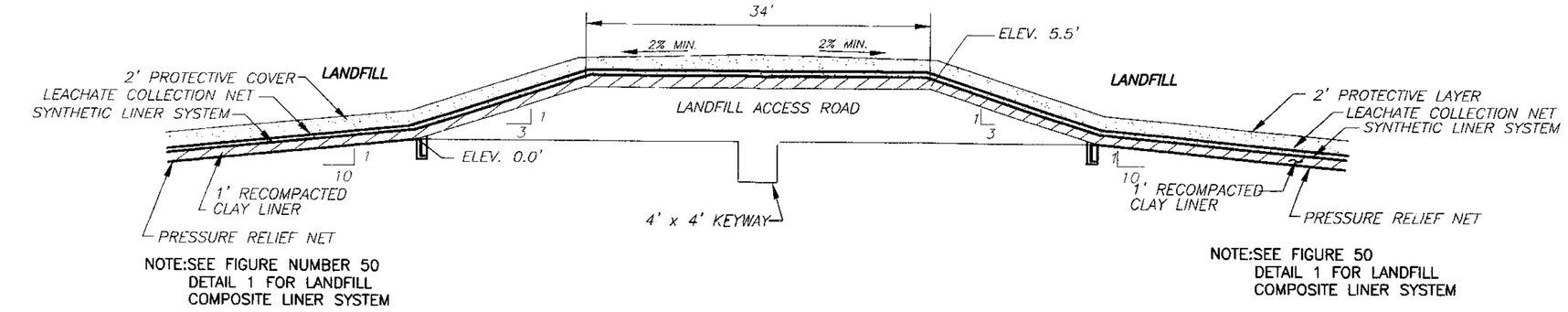

PHASE 4

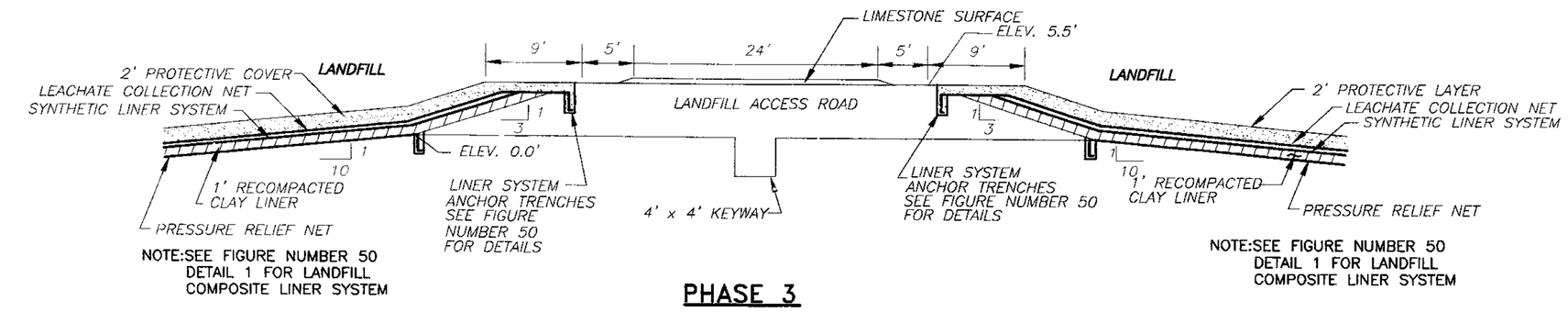

PHASE 3

TYPICAL ACCESS ROAD AND LANDFILL ACCESS LEVEE SECTION B

SECTIONS REFERENCED FROM FIGURE 33

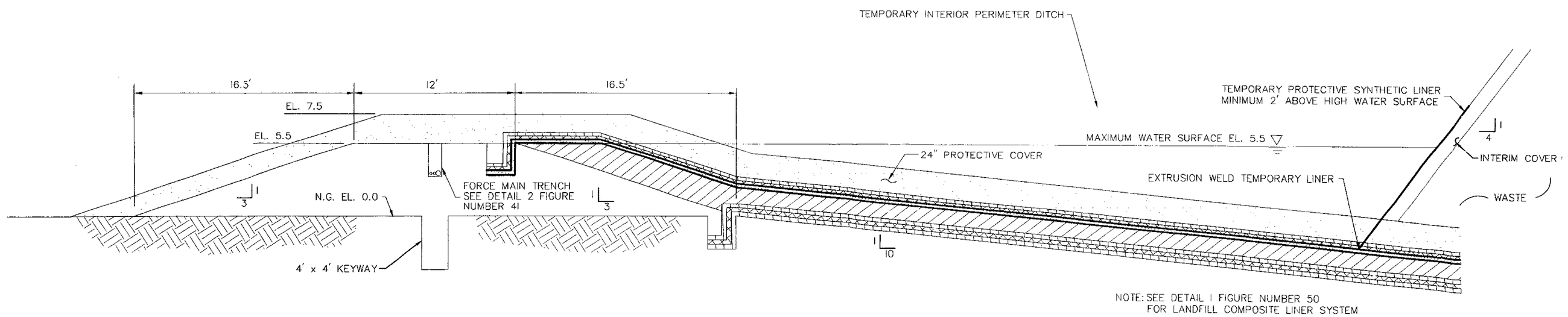

TYPICAL SECTION A
LANDFILL PERIMETER LEVEE WITH TEMPORARY DITCH

SECTION REFERENCED FROM FIGURE 32
CELLS 1 THRU 31

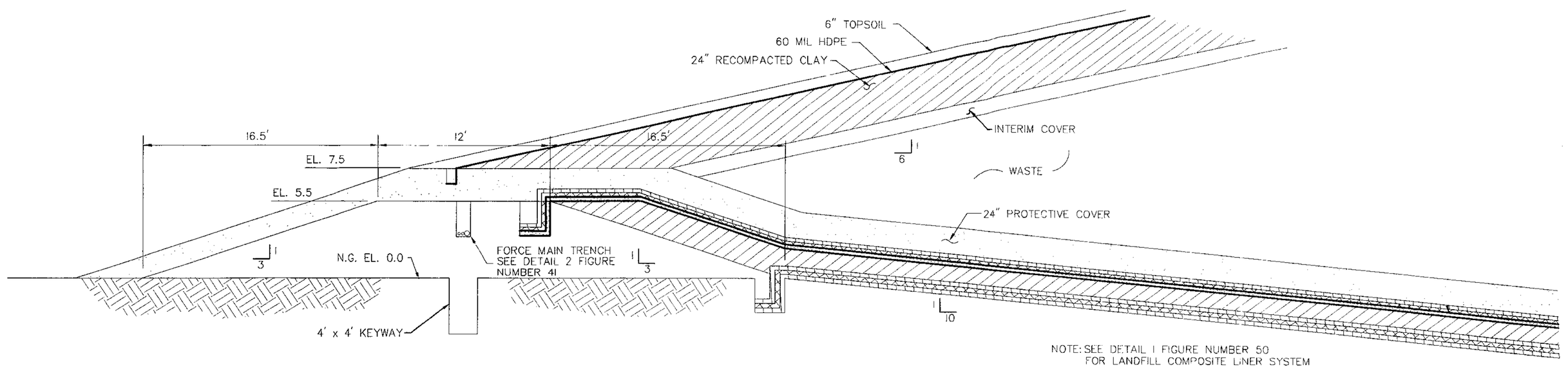

TYPICAL SECTION C
LANDFILL PERIMETER LEVEE WITH FINAL COVER

SECTION REFERENCED FROM FIGURE 35
CELLS 1–12, 26, 28 & 30

DATE	DESCRIPTION	BY
9/26/03	REVISED TO ADDRESS NOD MOD. NO. 7	
4-6-99	REVISED TO SHOW DETAILS AND SECTIONS REDRAWN FOR BETTER CLARIFICATION	P.L.M.

FIGURE 39

TYPICAL LINER, ACCESS ROAD & LANDFILL DETAILS

RIVER BIRCH LANDFILL

RIVER BIRCH LANDFILL, INC.

PAUL L. MIERS ENGINEERING, LLC
CIVIL ENGINEERS — LAND SURVEYORS
104 WESTMARK BLVD, SUITE 2A
PHONE (337) 981-7792
LAFAYETTE, LOUISIANA 70506
FAX(337) 981-7797

STATE OF LOUISIANA — PAUL L. MIERS — REG. No. 20741 — REGISTERED PROFESSIONAL ENGINEER — CIVIL ENGINEERING — 9-26-03

Date of Survey:	Book:	Page:	ENGINEER P.L.M.	CHECKED P.L.M.
			DRAWN BY R.T.G.	APPROVED P.L.M.
			DRN. 2063	DWG. 12

K:\2063\2\DWG\2063\FIG39C_DETAILS.dwg Mon Sep 29 11:58:10 2003

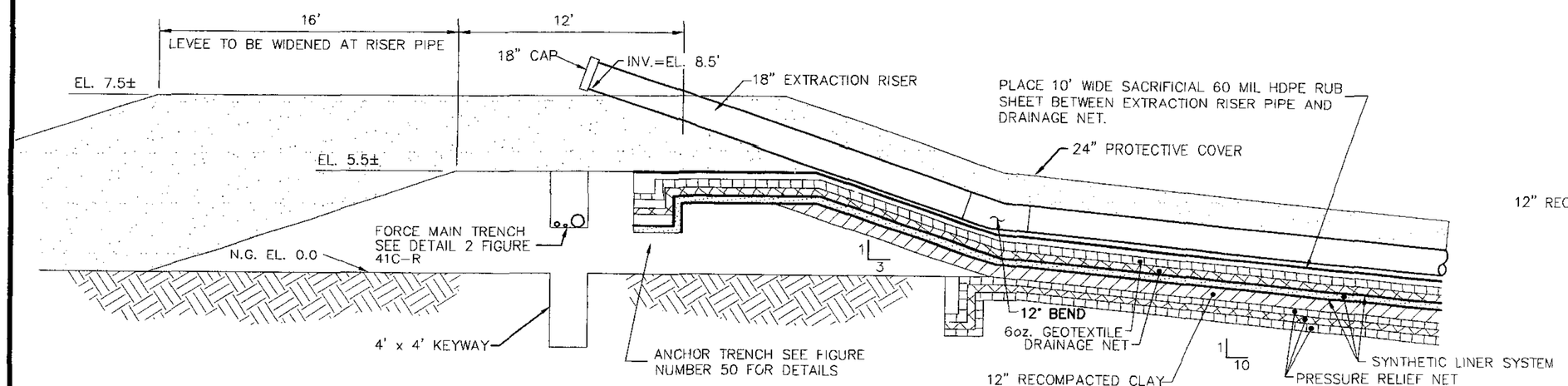

SECTION 2
LEACHATE COLLECTION RISER PIPE
SECTION REFERENCED FROM FIGURE NUMBER 34

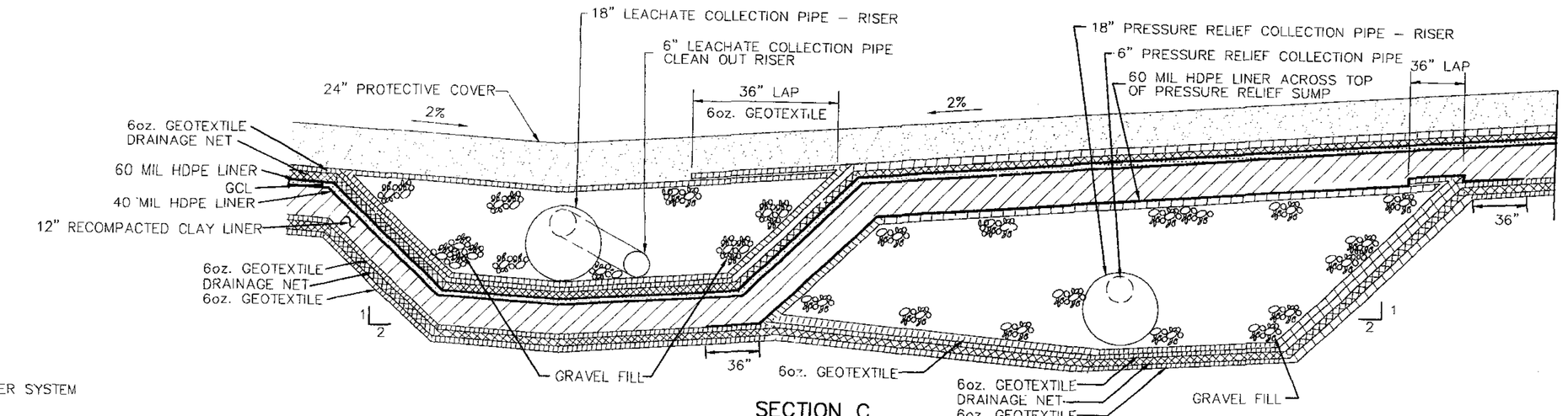

SECTION C
SECTION REFERENCED FROM THIS FIGURE

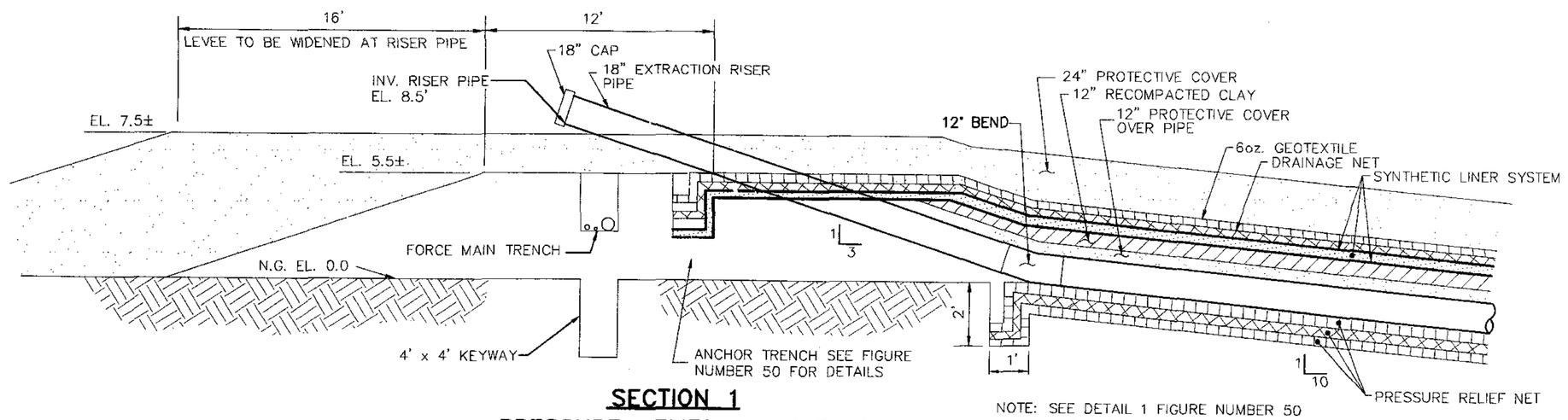

SECTION 1
PRESSURE RELIEF RISER PIPE
SECTION REFERENCED FROM FIGURE NUMBER 34

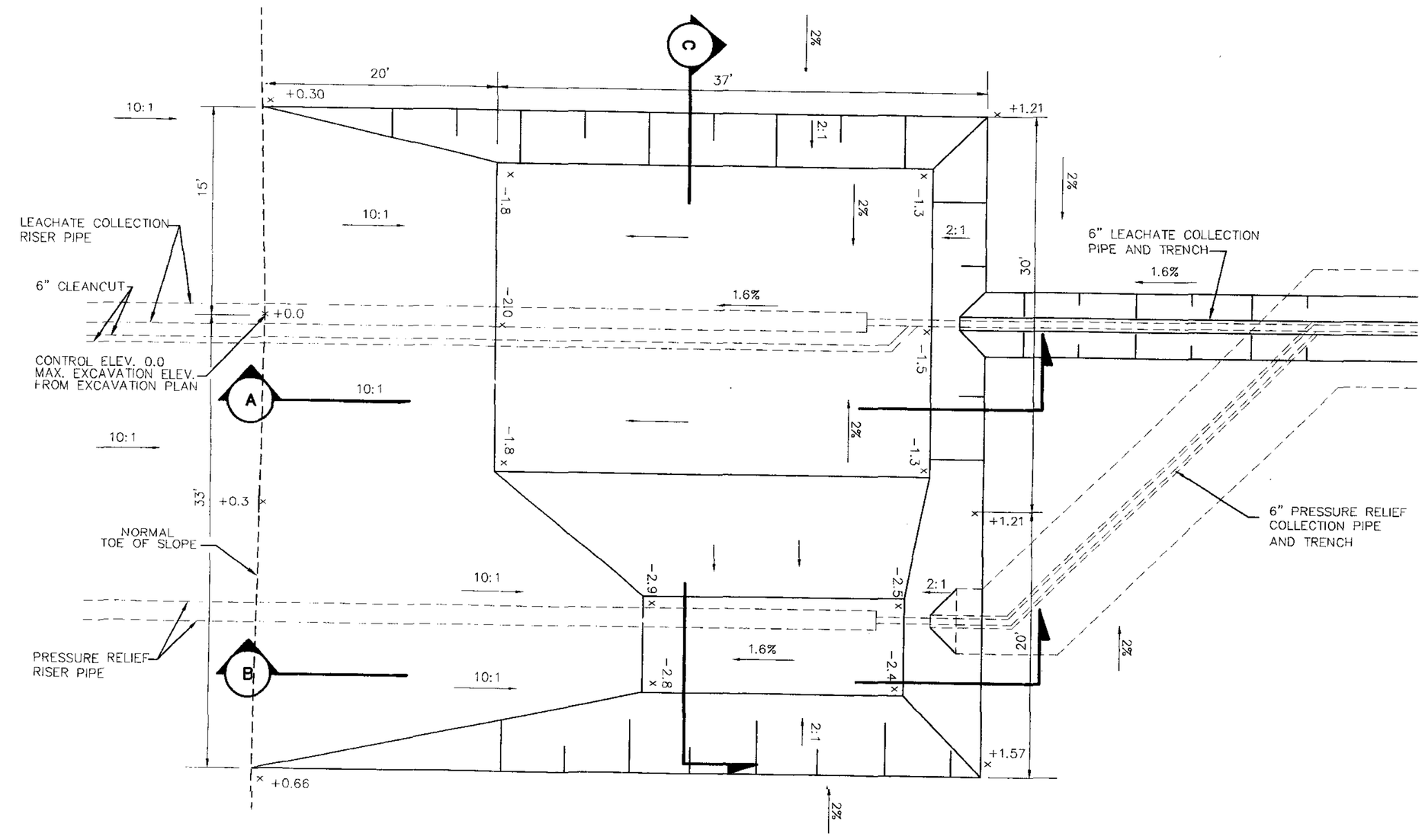

PLAN VIEW LEACHATE COLLECTION AND PRESSURE RELIEF SUMP
PLAN VIEW REFERENCE FROM FIGURE 34

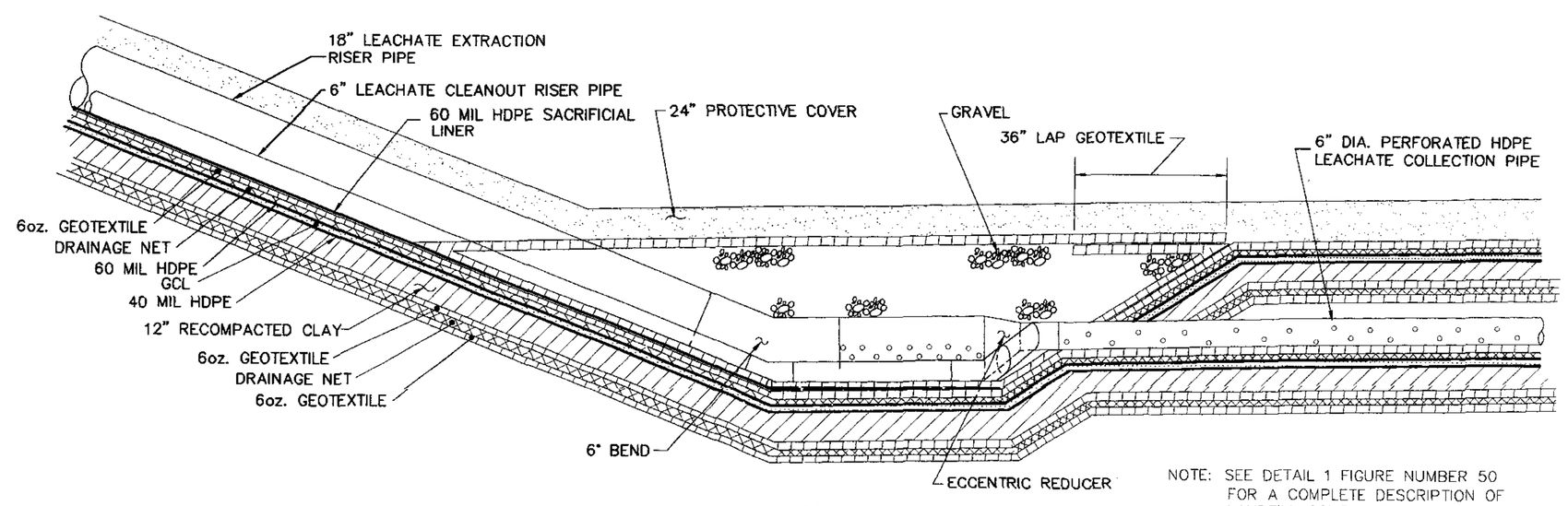

SECTION A
LEACHATE COLLECTION SUMP
SECTION REFERENCED FROM THIS FIGURE

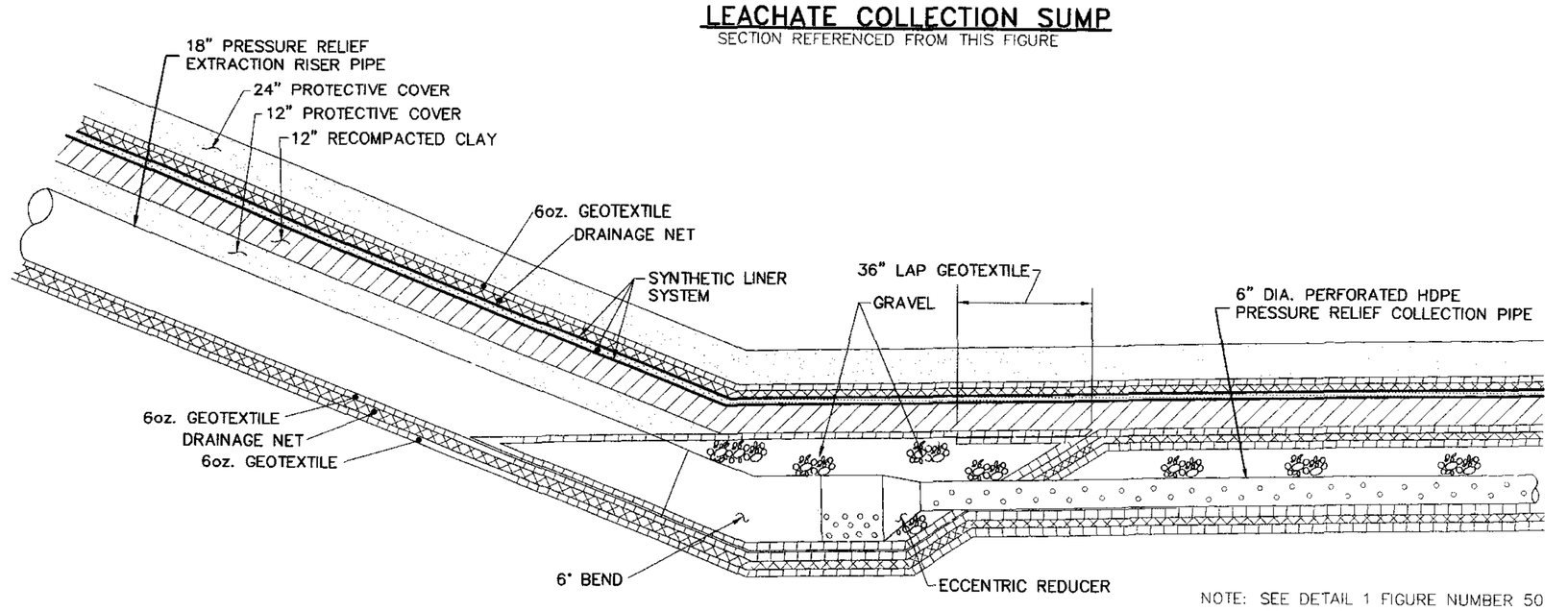

SECTION B
PRESSURE RELIEF COLLECTION SUMP
SECTION REFERENCED FROM THIS FIGURE

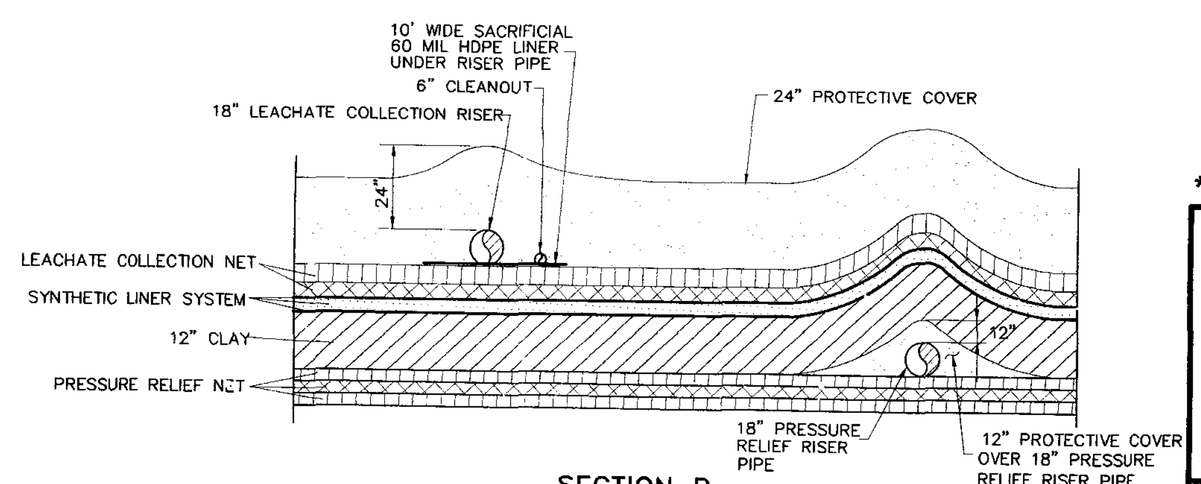

SECTION D
TYPICAL SECTION RISER PIPE ON SIDE SLOPE
SECTION REFERENCED FROM FIGURE NUMBER 33

DATE	DESCRIPTION	BY
10-27-03	REVISED TO ADD 60 MIL HDPE LINER ACROSS TOP OF SUMP	
9/26/03	REVISED TO ADDRESS NOD MOD. NO. 7	
4-27-99	REVISED DETAILS FOR CLARITY	PM/PLM

* SEE 40A FOR VERTICAL RISER DETAILS

FIGURE 40*
LEACHATE COLLECTION AND LINER DETAILS
RIVER BIRCH LANDFILL
RIVER BIRCH LANDFILL, INC.

PAUL L. MIERS ENGINEERING, LLC
CIVIL ENGINEERS — LAND SURVEYORS
104 WESTMARK BLVD, SUITE 2A
PHONE (337) 981-7792
LAFAYETTE, LOUISIANA 70506
FAX(337) 981-7797

Date of Survey:	Book:	Page:	ENGINEER	P.L.M.	CHECKED	P.L.M.
			DRAWN BY	R.T.G.	APPROVED	P.L.M.

STATE OF LOUISIANA — PAUL L. MIERS — REG. No. 20741 — REGISTERED PROFESSIONAL ENGINEER IN CIVIL ENGINEERING — 10-27-03

C:\2063\12\DWG\2063\FIG40_LEACH SUMP 10-27-03.dwg Mon Oct 27 21:31:44 2003

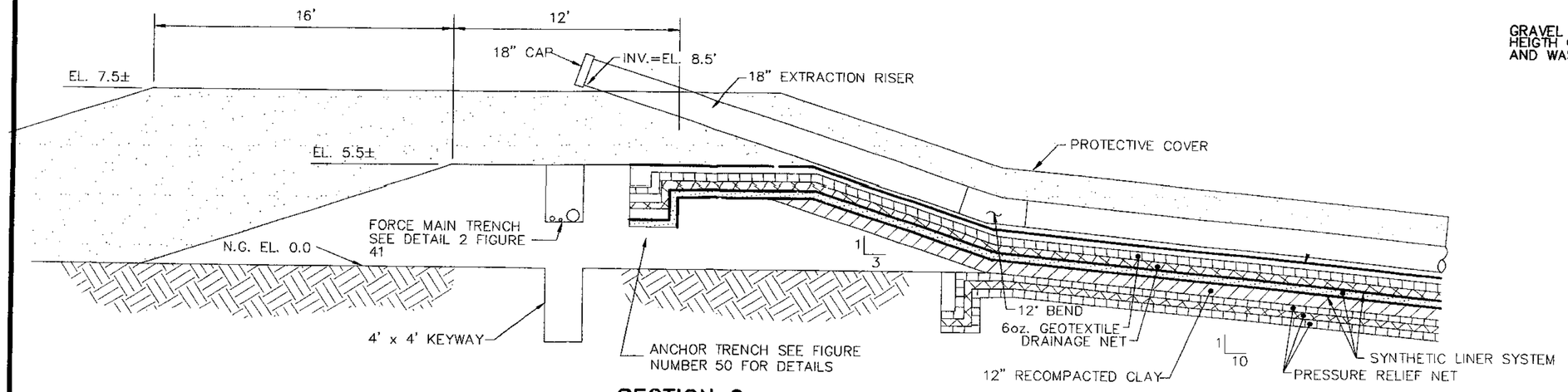

SECTION 2
LEACHATE COLLECTION SIDE RISER PIPE

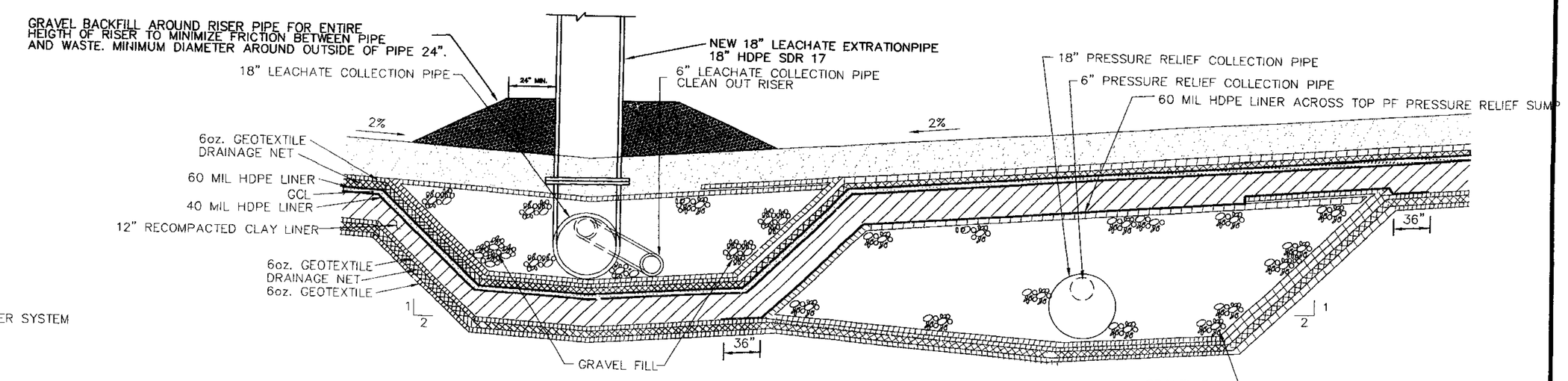

SECTION C

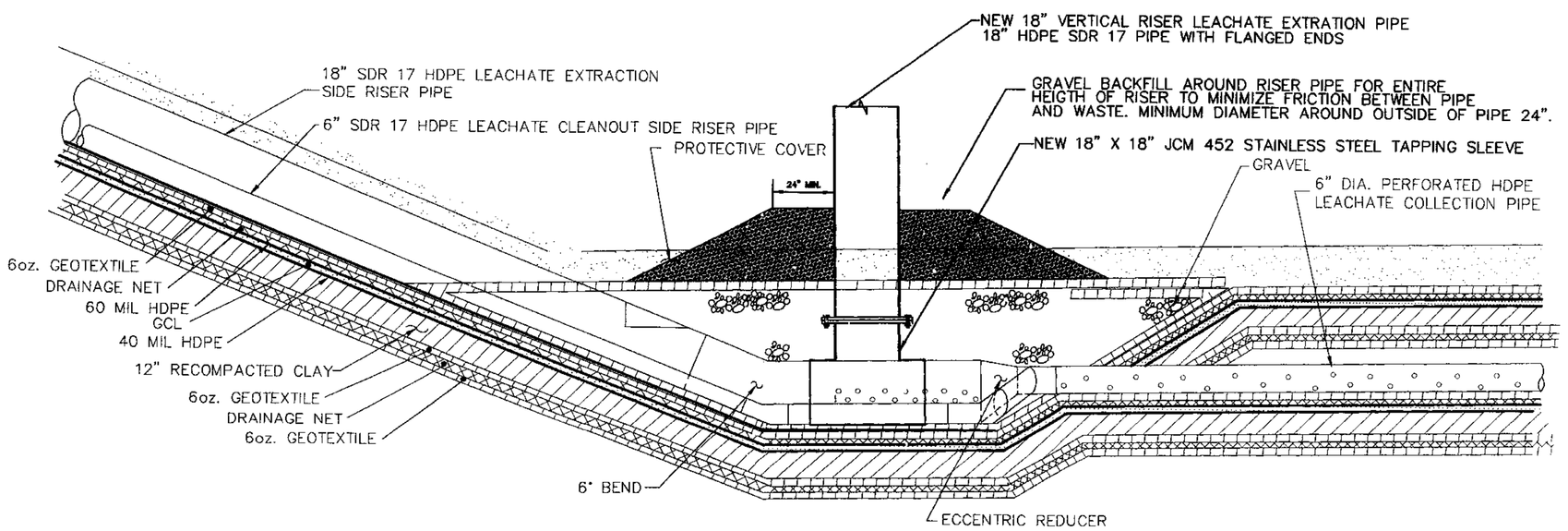

PLAN VIEW LEACHATE COLLECTION PIPE AND VERTICLE RISER TAP

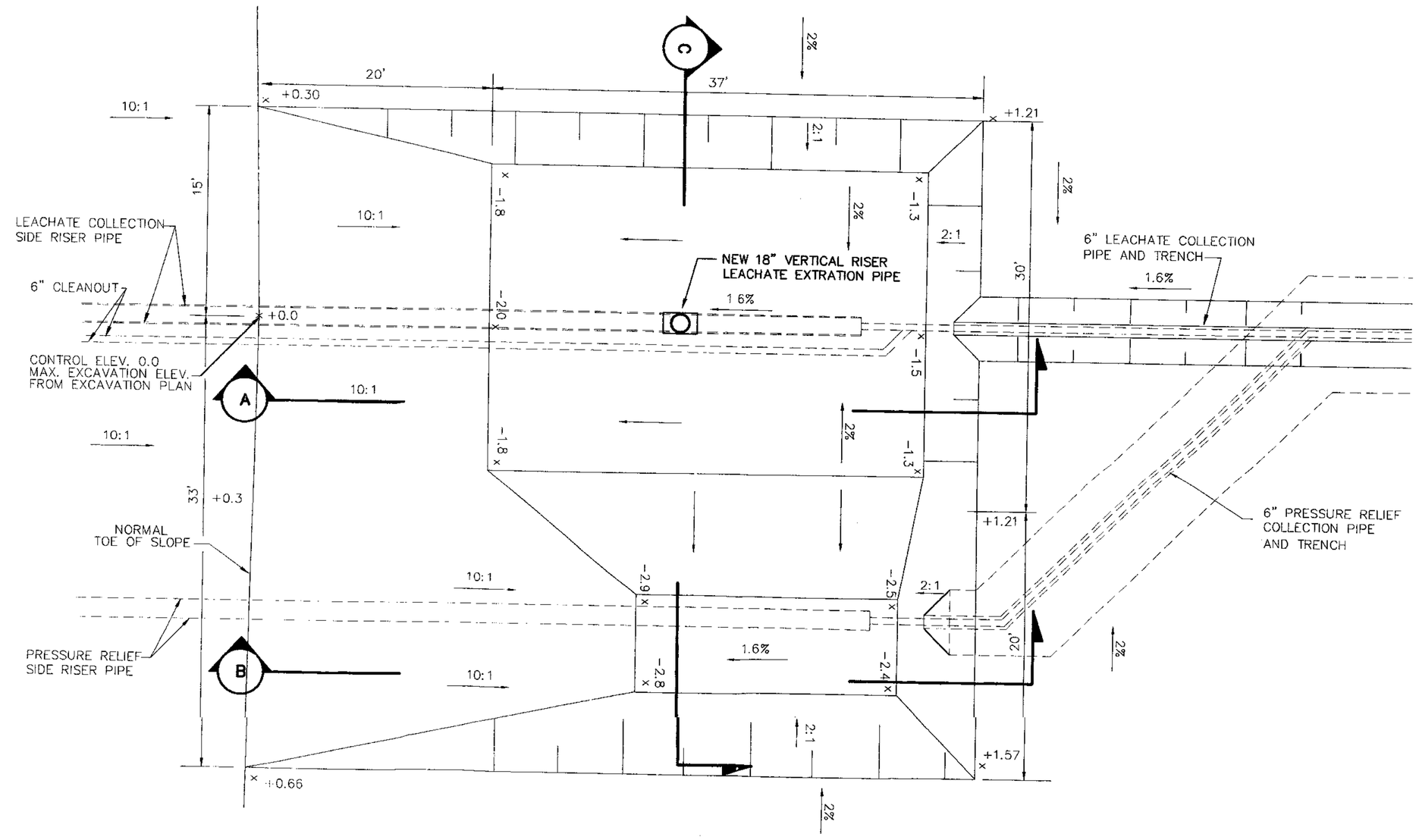

PLAN VIEW LEACHATE COLLECTION AND PRESSURE RELIEF SUMP

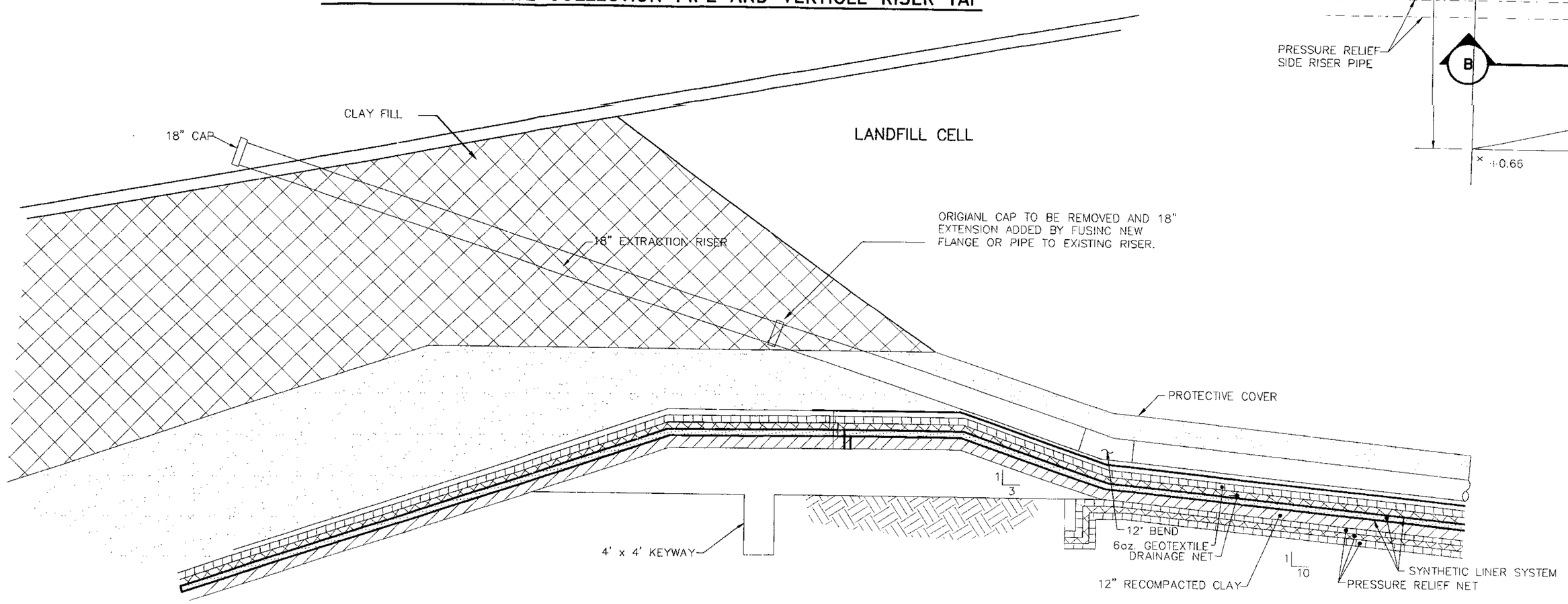

TYPICAL SECTON INTERIOR PERIMETER DITCH SHOWING EXTENSION OF RISER PIPE

DATE	DESCRIPTION	
10-27-03	REVISED TO ADD 60 MIL HDPE ACROSS TOP OS PRESSURE SUMP	
9/26/03	REVISED TO ADDRESS NOD NOD NO. 7	
4-27-99	REVISED DETAILS FOR CLARITY	JPM/PLM

FIGURE 40A
LEACHATE COLLECTION PIPE AND VERTICAL RISER DETAILS FOR CELLS 13-25, 27, 29, 31

RIVER BIRCH LANDFILL
RIVER BIRCH LANDFILL, INC.

PAUL L. MIERS ENGINEERING, LLC
CIVIL ENGINEERS
LAND SURVEYORS
104 WESTMARK BLVD, SUITE 2A
PHONE (337) 981-7792
LAFAYETTE, LOUISIANA 70506
FAX(337) 981-7797

STATE OF LOUISIANA
PAUL L. MIERS
REG. No. 20741
REGISTERED PROFESSIONAL ENGINEER
CIVIL ENGINEERING

Date of Survey:	Book:	Page:	ENGINEER	CHECKED
			DRAWN BY	APPROVED

K:\2653\12\DWG\2063\fig40a-leachate-sump.dwg Mon Oct 27 20:29:17 2003

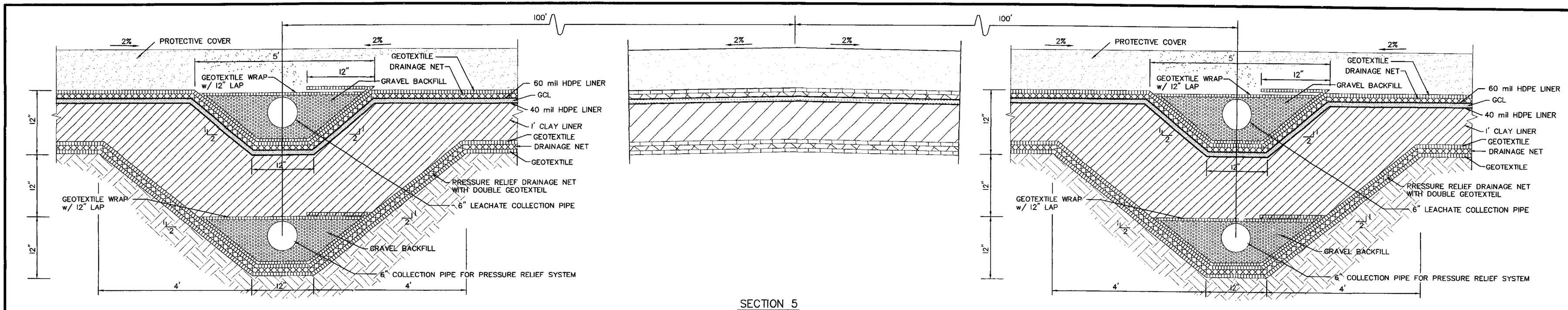

SECTION 5
TYPICAL LANDFILL BOTTOM CONFIGURATION
SECTION REFERENCED FROM FIGURE 33
N.T.S.

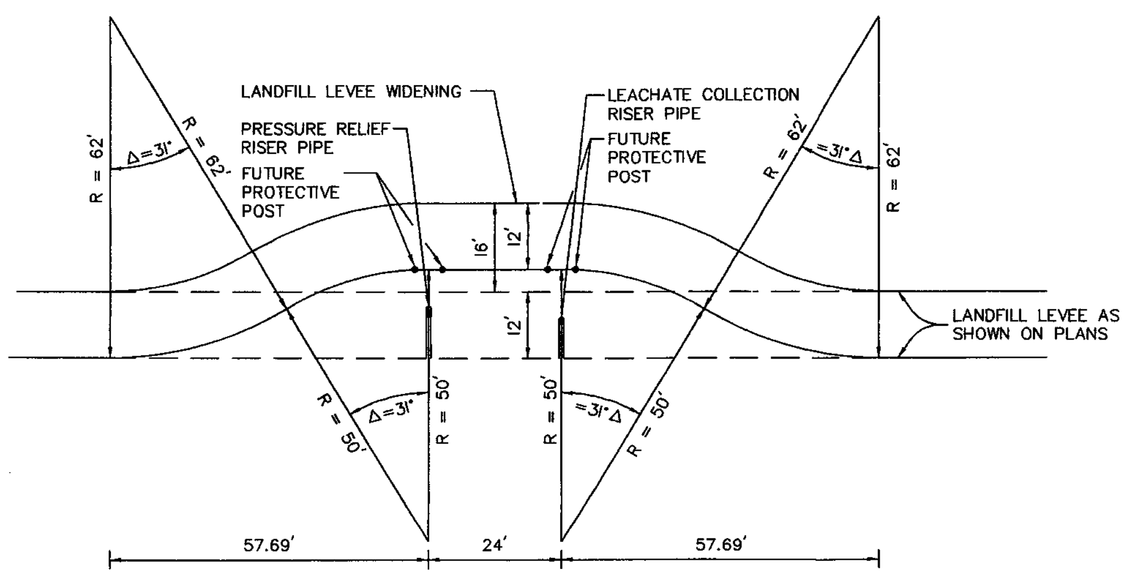

TYPICAL ROAD WIDENING AT SUMPS
SECTION REFERENCED FROM FIGURE NUMBER 34

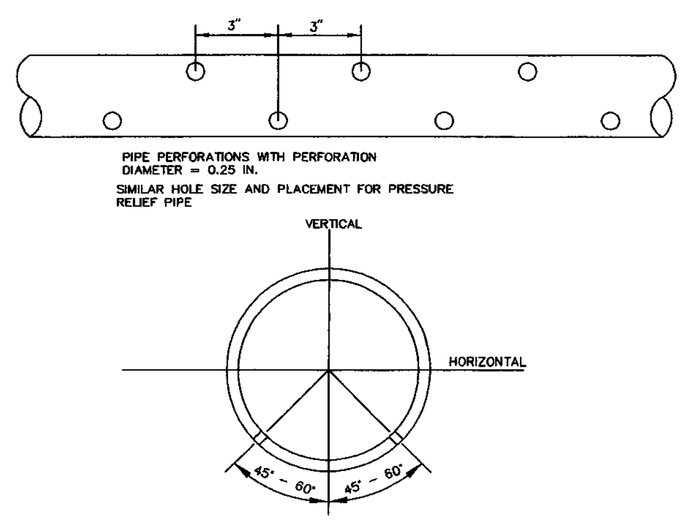

TYPICAL LEACHATE COLLECTION PIPE

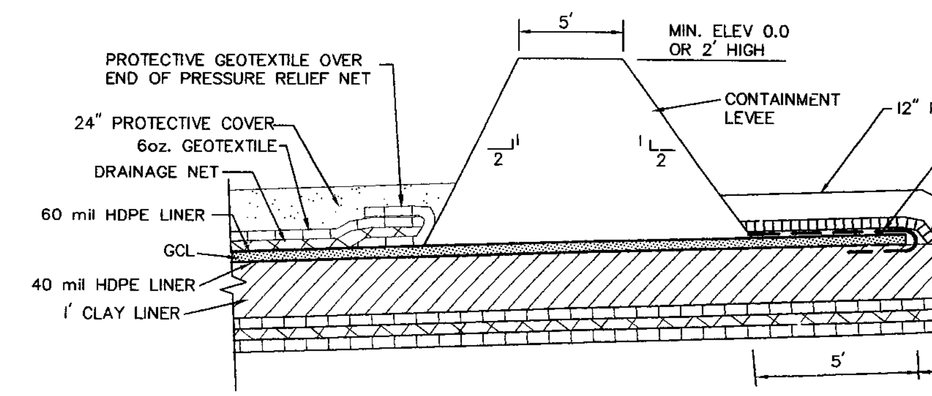

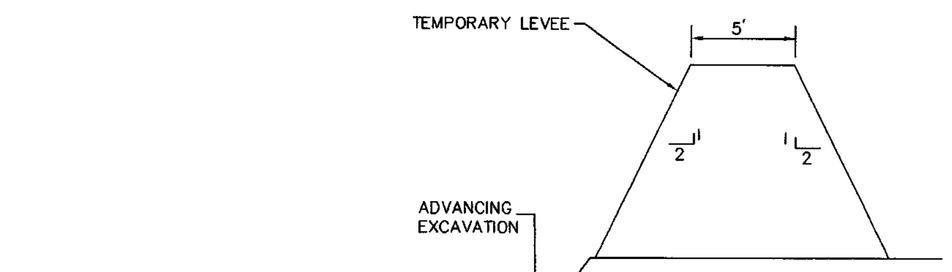

TYPICAL DETAIL FOR PHASE CONSTRUCTION CONTAINMENT LEVEE AT END OF LINER CONSTRUCTION
N.T.S.

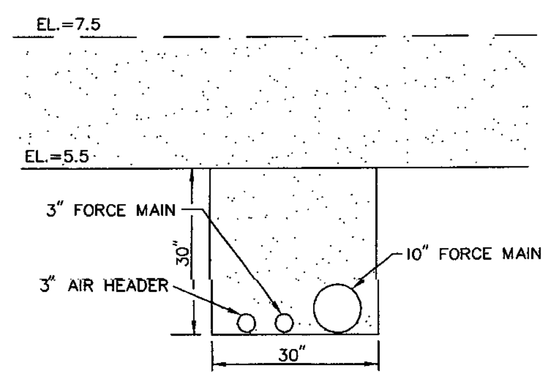

DETAIL 2
TYPICAL TRENCH
FORCE MAIN/AIR HEADER

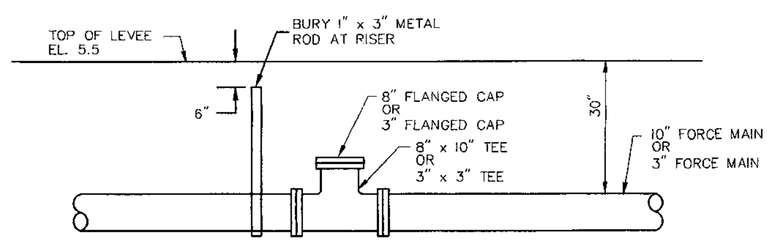

FORCE MAIN RISER

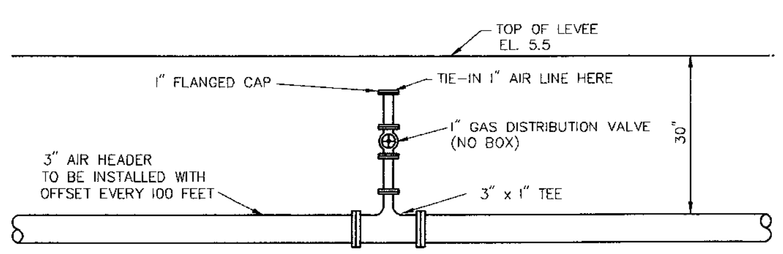

AIR HEADER RISER

NOTE: AIR HEADER AND FORCE MAIN RISERS TO BE PLACED AT EACH SUMP

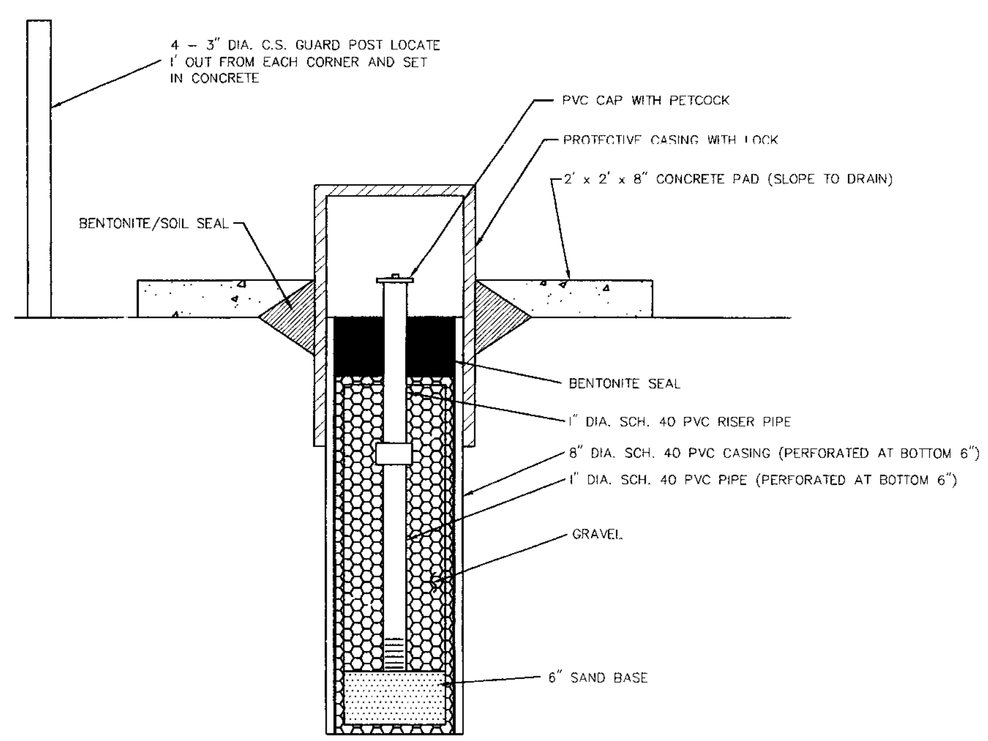

TYPICAL GAS MONITORING PROBE

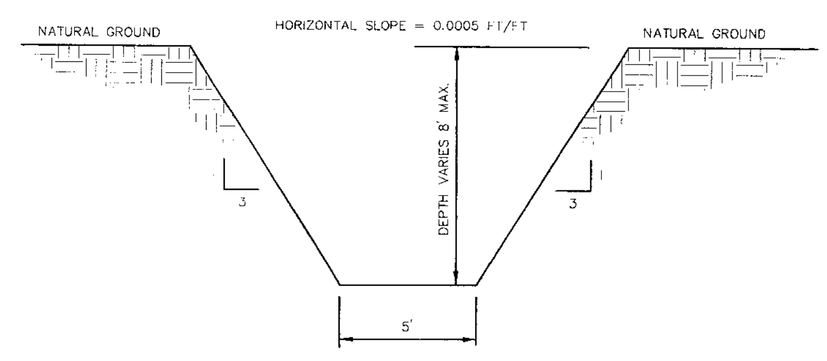

TYPICAL EXTERIOR PERIMETER DITCH

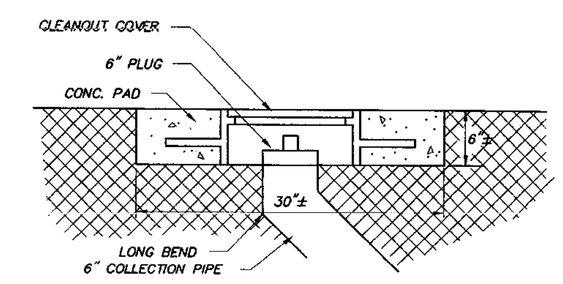

TYPICAL SECTION CLEANOUT COVER

DATE	DESCRIPTION	BY
4-27-99	REVISED DETAILS FOR CLARITY	JPM/PLM
	REVISED	

FIGURE 41
TYPICAL LANDFILL DETAILS

RIVER BIRCH LANDFILL
RIVER BIRCH LANDFILL, INC.

mader-miers
ENGINEERING, INC
3909 W. CONGRESS ST., SUITE 101 - LAFAYETTE, LOUISIANA 70506
PHONE NO. (337) 989-8047 FAX (337) 988-3219

STATE OF LOUISIANA
PAUL L. MIERS
REG. NO. 20741
REGISTERED PROFESSIONAL ENGINEER IN ENVIRONMENTAL ENGINEERING
3-24-03

Date of Survey:	Book:	Page:	ENGINEER PLM	CHECKED PLM
			DRAWN BY R.T.G.	APPROVED PLM
			BPN 2063	SPN 05

FILE D DWG

K:\2063\12\DWG\Fig41C_TYPDET.dwg Mon Mar 24 12:44:10 2003

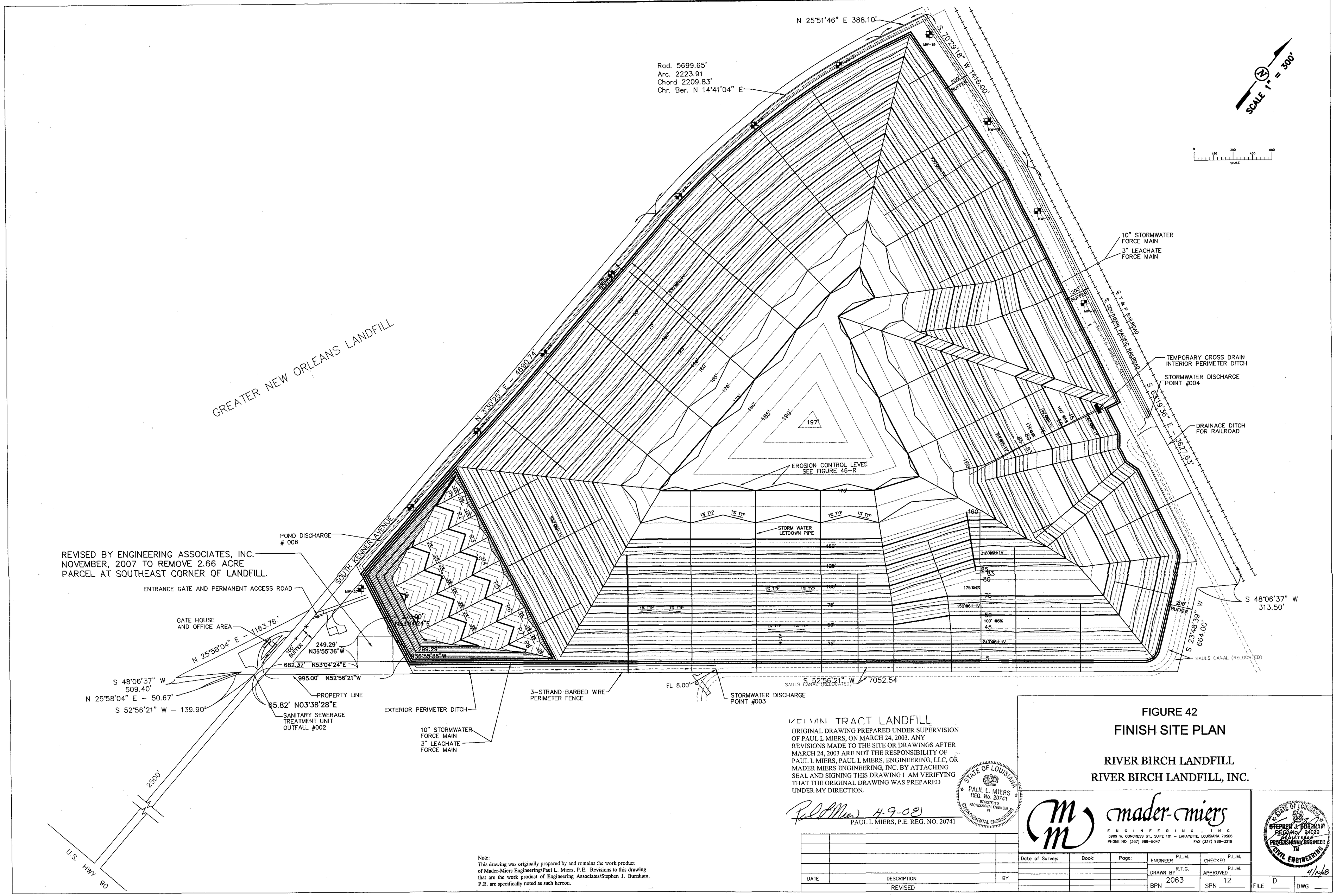

KEVIN TRACT LANDFILL

ORIGINAL DRAWING PREPARED UNDER SUPERVISION OF PAUL L MIERS, ON MARCH 24, 2003. ANY REVISIONS MADE TO THE SITE OR DRAWINGS AFTER MARCH 24, 2003 ARE NOT THE RESPONSIBILITY OF PAUL L MIERS, PAUL L MIERS, ENGINEERING, LLC, OR MADER MIERS ENGINEERING, INC. BY ATTACHING SEAL AND SIGNING THIS DRAWING I AM VERIFYING THAT THE ORIGINAL DRAWING WAS PREPARED UNDER MY DIRECTION.

STATE OF LOUISIANA PAUL L. MIERS REG. No. 20741 REGISTERED PROFESSIONAL ENGINEER IN ENVIRONMENTAL ENGINEERING

4-9-08

PAUL L MIERS, P.E. REG. NO. 20741

DATE	DESCRIPTION	BY
	REVISED	

Note:
This drawing was originally prepared by and remains the work product of Mader-Miers Engineering/Paul L. Miers, P.E. Revisions to this drawing that are the work product of Engineering Associates/Stephen J. Burnham, P.E. are specifically noted as such hereon.

FIGURE 42
FINISH SITE PLAN

RIVER BIRCH LANDFILL
RIVER BIRCH LANDFILL, INC.

mader-miers
ENGINEERING, INC
3909 W. CONGRESS ST., SUITE 101 – LAFAYETTE, LOUISIANA 70506
PHONE NO. (337) 989-8047 FAX (337) 988-3219

STATE OF LOUISIANA STEPHEN J. BURNHAM REG. No. 24029 PROFESSIONAL ENGINEER IN CIVIL ENGINEERING 4/10/08

Date of Survey:	Book:	Page:	ENGINEER P.L.M.	CHECKED P.L.M.
			DRAWN BY R.T.G.	APPROVED P.L.M.
			BPN 2063	SPN 12

FILE D DWG ___

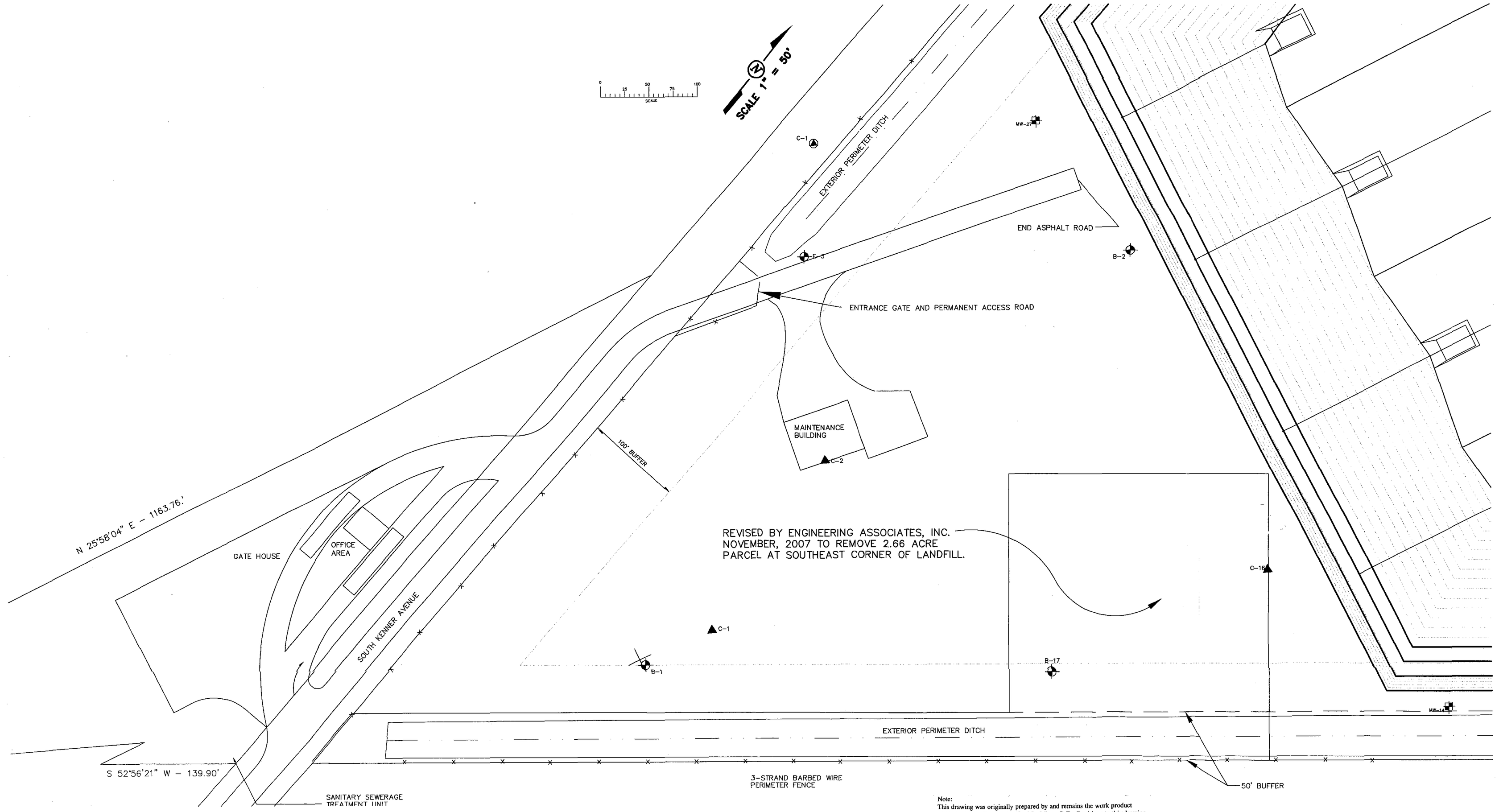

Note:
This drawing was originally prepared by and remains the work product of Mader-Miers Engineering/Paul L. Miers, P.E. Revisions to this drawing that are the work product of Engineering Associates/Stephen J. Burnham, P.E. are specifically noted as such hereon.

ORIGINAL DRAWING PREPARED UNDER SUPERVISION OF PAUL L MIERS, ON SEPTEMBER 29, 2003. ANY REVISIONS MADE TO THE SITE OR DRAWINGS AFTER SEPTEMBER 29, 2003 ARE NOT THE RESPONSIBILITY OF PAUL L MIERS, PAUL L MIERS, ENGINEERING, LLC, OR MADER MIERS ENGINEERING, INC. BY ATTACHING SEAL AND SIGNING THIS DRAWING I AM VERIFYING THAT THE ORIGINAL DRAWING WAS PREPARED UNDER MY DIRECTION.

STATE OF LOUISIANA
PAUL L. MIERS
REG. No. 20741
REGISTERED PROFESSIONAL ENGINEER IN ENVIRONMENTAL ENGINEERING

4-9-08
PAUL L MIERS, P.E. REG. NO. 20741

DATE	DESCRIPTION	BY
9/26/03	REVISED TO ADDRESS NOD MOD. NO. 7	

REVISED

FIGURE 43
OPERATIONS AREA SITE PLAN

RIVER BIRCH LANDFILL
RIVER BIRCH LANDFILL, INC.

PLM PAUL L. MIERS ENGINEERING, LLC

CIVIL ENGINEERS
104 WESTMARK BLVD, SUITE 2A
PHONE (337) 981-7792

LAND SURVEYORS
LAFAYETTE, LOUISIANA 70506
FAX(337) 981-7797

STATE OF LOUISIANA
STEPHEN J. BURNHAM
REG. No. 24028
REGISTERED PROFESSIONAL ENGINEER IN CIVIL ENGINEERING
4/10/08

Date of Survey:	Book:	Page:	ENGINEER P.L.M.	CHECKED P.L.M.	
			DRAWN BY R.T.G.	APPROVED P.L.M.	
			BPN 2063	SPN 12	FILE D / DWG

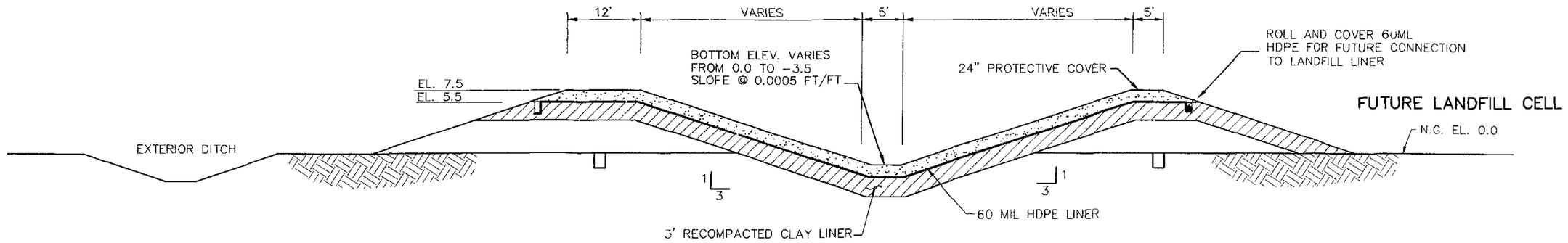

TYPICAL SECTION INTERIOR PERIMETER DITCH
AT FUTURE LANDFILL CELL

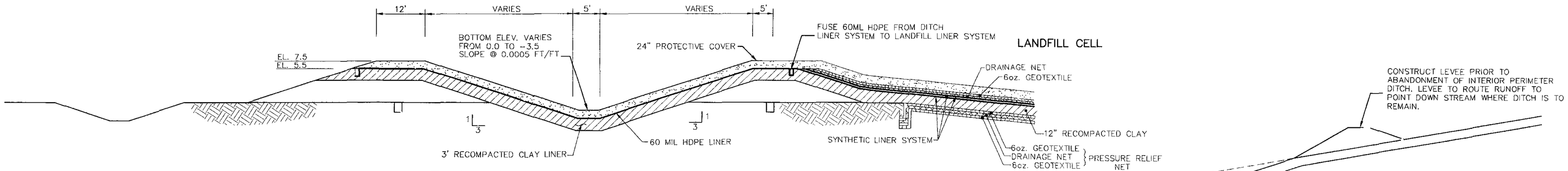

TYPICAL SECTION INTERIOR PERIMETER DITCH
ADJUSTED TO CONSTRUCTED LANDFILL CELL

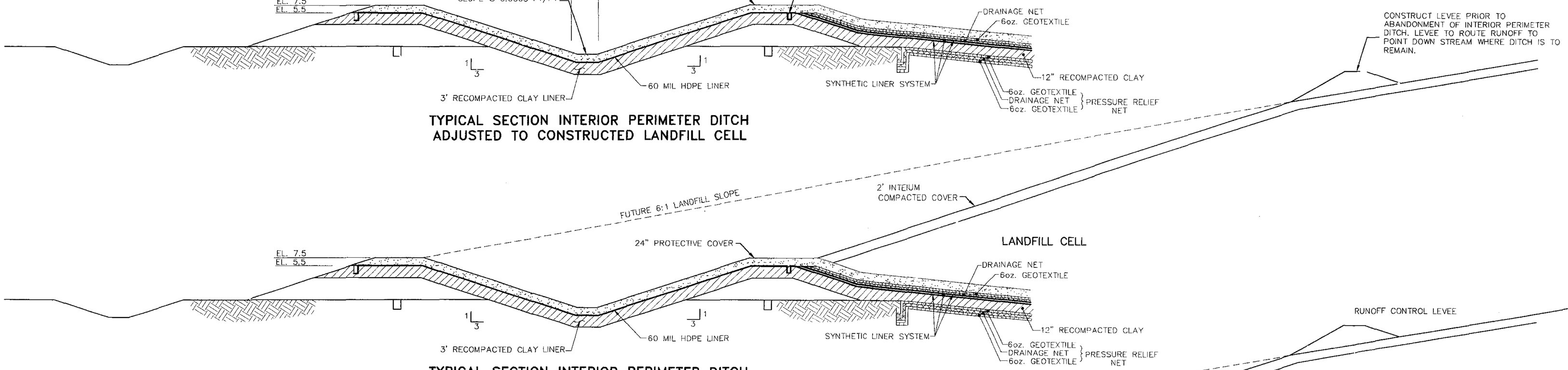

TYPICAL SECTION INTERIOR PERIMETER DITCH
ADJACENT TO INITIAL FILLED CELL

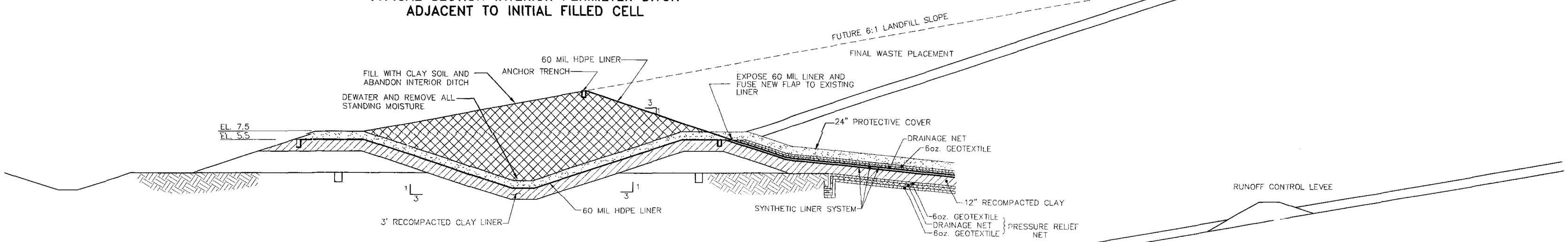

TYPICAL SECTION INTERIOR PERIMETER DITCH
AFTER ABANDONMENT

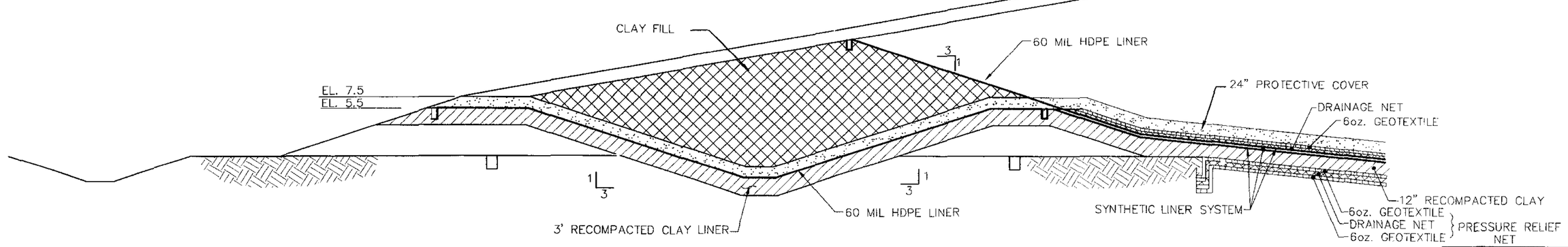

TYPICAL SECTION INTERIOR PERIMETER DITCH
WITH FINAL CAP

DATE	DESCRIPTION	BY
10/26/03	REVISED TO SHOW 60 MIL HDPE LINER ACROSS CLAY FILL IN INTERIOR PERIMETER DITCH	

FIGURE 44

TYPICAL DETAILS INTERIOR PERIMETER DITCH

RIVER BIRCH LANDFILL

RIVER BIRCH LANDFILL, INC.

PAUL L. MIERS ENGINEERING, LLC
CIVIL ENGINEERS
LAND SURVEYORS
104 WESTMARK BLVD, SUITE 2A
PHONE (337) 981-7792
LAFAYETTE, LOUISIANA 70506
FAX(337) 981-7797

STATE OF LOUISIANA
PAUL L. MIERS
REG. No. 20741
REGISTERED
PROFESSIONAL ENGINEER
10-26-03
CIVIL ENGINEERING

Date of Survey:	Book:	Page:	ENGINEER PLM	CHECKED PLM
			DRAWN BY KCS	APPROVED PLM

K:\2063\12\DWG\2063\F1644-REV-10-27-03.dwg Tue Oct 28 11:14:35 2003

FIGURE 45 – A
RIVER BIRCH LANDFILL
PROJECT IMPLEMENTATION SCHEDULE

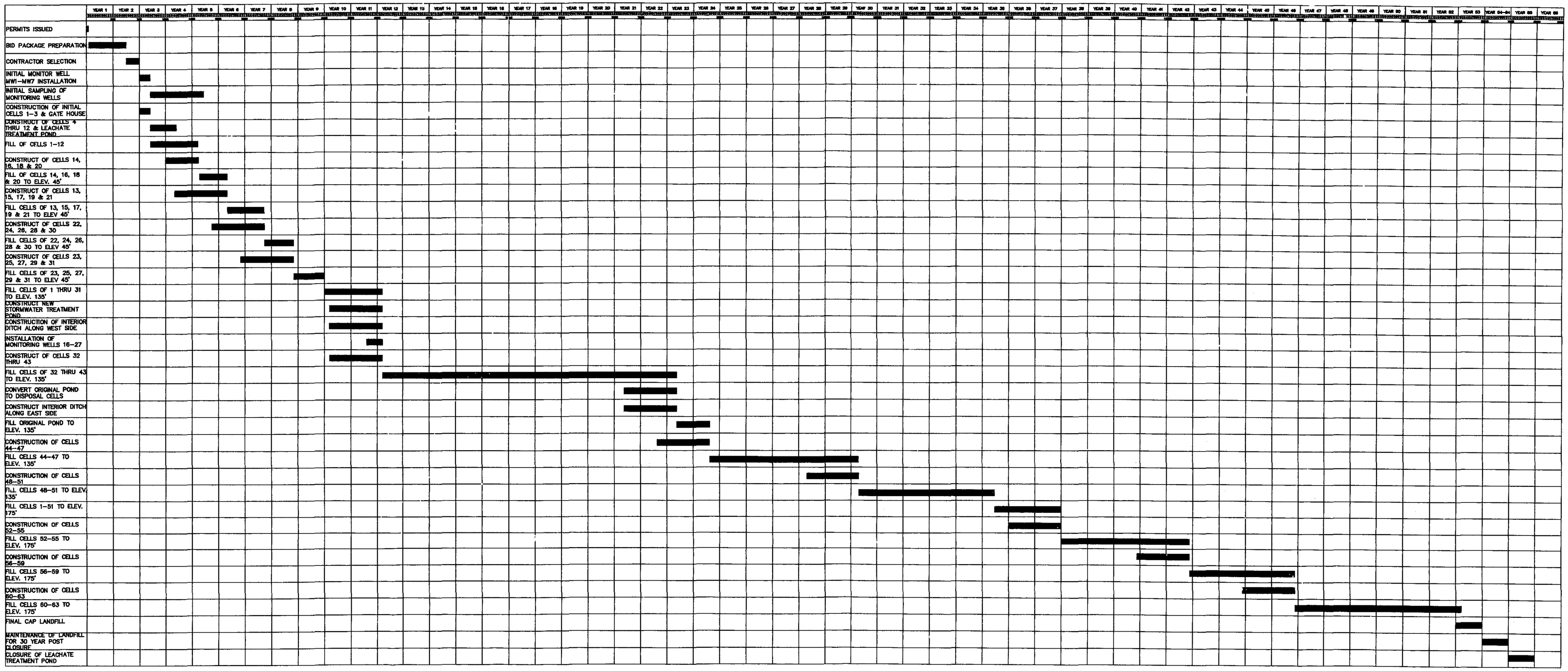

STATE OF LOUISIANA
PAUL L. MIERS
REG. No 20741
REGISTERED PROFESSIONAL ENGINEER IN ENVIRONMENTAL ENGINEERING
3-24-03

FILE NAME: FIG45A

\2063.12\DWG\FIG45_implementationschedule.dwg Mon Mar 24 14:11:15 2003

PART OF SECTIONS 4, 6, 36 AND 37
T 13 S, R 22 E, SOUTHEASTERN LAND
DISTRICT OF LOUISIANA WEST OF THE
MISSISSIPPI RIVER, WAGGAMAN
JEFFERSON PARISH, LOUISIANA

SECTION B
TYPICAL SECTION THROUGH LET DOWN PIPE
SECTION REFERENCED FROM THIS FIGURE

SECTION A
TYPICAL SECTION LET DOWN PIPE
SECTION REFERENCED FROM THIS FIGURE

DETAIL 1
TYPICAL EROSION CONTROL LEVEE
* CONSTRUCT LEVEE UP LANDFILL SLOPE TO PRODUCE 1% GRADE TO LET DOWN PIPE

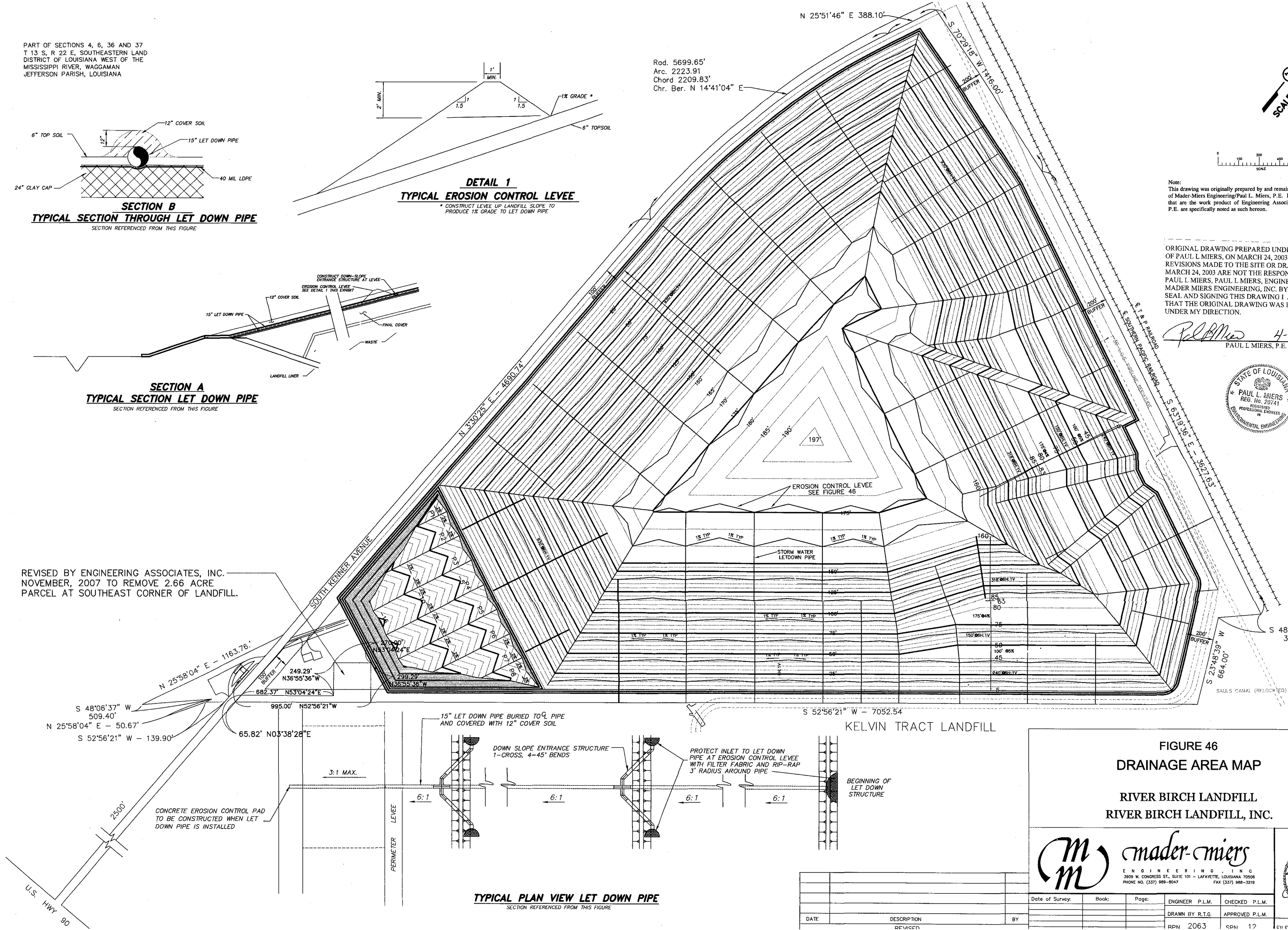

TYPICAL PLAN VIEW LET DOWN PIPE
SECTION REFERENCED FROM THIS FIGURE

Note:
This drawing was originally prepared by and remains the work product of Mader-Miers Engineering/Paul L. Miers, P.E. Revisions to this drawing that are the work product of Engineering Associates/Stephen J. Burnham, P.E. are specifically noted as such hereon.

ORIGINAL DRAWING PREPARED UNDER SUPERVISION OF PAUL L MIERS, ON MARCH 24, 2003. ANY REVISIONS MADE TO THE SITE OR DRAWINGS AFTER MARCH 24, 2003 ARE NOT THE RESPONSIBILITY OF PAUL L MIERS, PAUL L MIERS, ENGINEERING, LLC, OR MADER MIERS ENGINEERING, INC. BY ATTACHING SEAL AND SIGNING THIS DRAWING I AM VERIFYING THAT THE ORIGINAL DRAWING WAS PREPARED UNDER MY DIRECTION.

4-9-08
PAUL L MIERS, P.E. REG. NO. 20741

STATE OF LOUISIANA
PAUL L. MIERS
REG. No. 20741
REGISTERED PROFESSIONAL ENGINEER IN ENVIRONMENTAL ENGINEERING

FIGURE 46
DRAINAGE AREA MAP

RIVER BIRCH LANDFILL
RIVER BIRCH LANDFILL, INC.

mader-miers
ENGINEERING, INC
3909 W. CONGRESS ST., SUITE 101 – LAFAYETTE, LOUISIANA 70506
PHONE NO. (337) 989-8047 FAX (337) 988-3219

STATE OF LOUISIANA
STEPHEN J. BURNHAM
REG. No. 24029
REGISTERED PROFESSIONAL ENGINEER IN CIVIL ENGINEERING
4/8/08

DATE	DESCRIPTION	BY
	REVISED	

Date of Survey:	Book:	Page:

ENGINEER P.L.M.	CHECKED P.L.M.
DRAWN BY R.T.G.	APPROVED P.L.M.
RPN 2063	SPN 12
FILE D	DWG

PART OF SECTIONS 4, 6, 36 AND 37
T 13 S, R 22 E, SOUTHEASTERN LAND
DISTRICT OF LOUISIANA WEST OF THE
MISSISSIPPI RIVER, WAGGAMAN
JEFFERSON PARISH, LOUISIANA

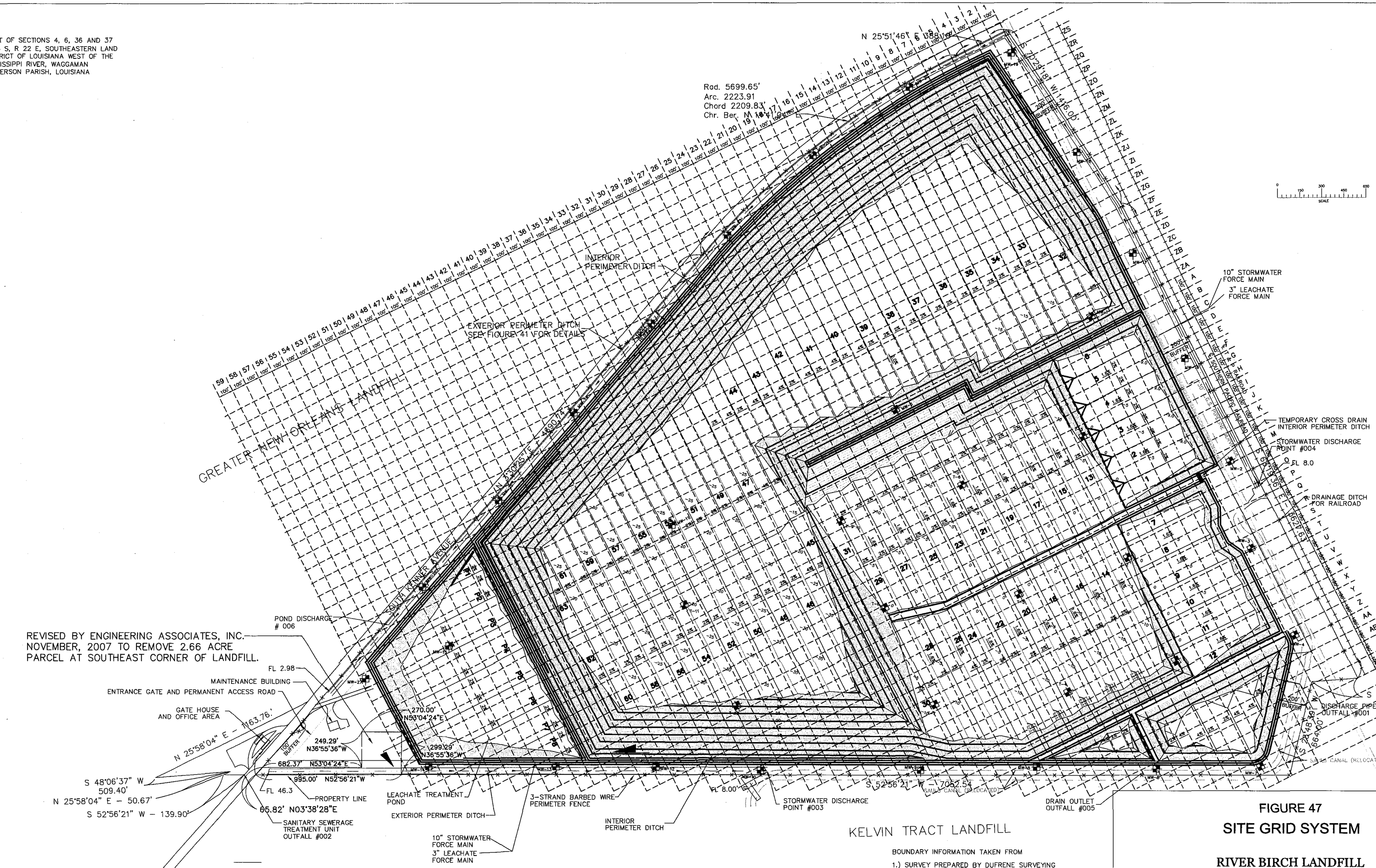

REVISED BY ENGINEERING ASSOCIATES, INC.
NOVEMBER, 2007 TO REMOVE 2.66 ACRE
PARCEL AT SOUTHEAST CORNER OF LANDFILL.

KELVIN TRACT LANDFILL

BOUNDARY INFORMATION TAKEN FROM

1.) SURVEY PREPARED BY DUFRENE SURVEYING AND ENGINEERING, INC. DATED MAY 23, 1993 AND LAST REVISED 6-26-93

2.) RESUBDIVISION OF A PORTION OF SECTION 4 TOWNSHIP 13 SOUTH, RANGE 22 EAST, SOUTHEASTERN DISTRICT OF LOUISIANA, WEST OF THE MISSISSIPPI RIVER, WAGGAMAN INTO LOTS SK-1, SK-2, AND SK-3 PREPARED BY DUFRENE SURVEYING AND ENGINEERING, INC. JUNE 17, 2002

ORIGINAL DRAWING PREPARED UNDER SUPERVISION OF PAUL L MIERS, ON MARCH 24, 2003. ANY REVISIONS MADE TO THE SITE OR DRAWINGS AFTER MARCH 24, 2003 ARE NOT THE RESPONSIBILITY OF PAUL L MIERS, PAUL L MIERS, ENGINEERING, LLC, OR MADER MIERS ENGINEERING, INC. BY ATTACHING SEAL AND SIGNING THIS DRAWING I AM VERIFYING THAT THE ORIGINAL DRAWING WAS PREPARED UNDER MY DIRECTION.

STATE OF LOUISIANA
PAUL L. MIERS
REG. No. 20741
REGISTERED PROFESSIONAL ENGINEER IN ENVIRONMENTAL ENGINEERING

4-9-08
PAUL L MIERS, P.E. REG. NO. 20741

Note:
This drawing was originally prepared by and remains the work product of Mader-Miers Engineering/Paul L. Miers, P.E. Revisions to this drawing that are the work product of Engineering Associates/Stephen J. Burnham, P.E. are specifically noted as such hereon.

DATE	DESCRIPTION	BY
3/19/03	MODIFICATION NO. 7	
2/29/00	REVISED DISCHARGE POINT NUMBERS AND EXTERIOR PERIMETER DITCH OUTFALL LOCATION	
4/27/99	REVISED FIGURE REFERENCES	

REVISED

FIGURE 47
SITE GRID SYSTEM

RIVER BIRCH LANDFILL
RIVER BIRCH LANDFILL, INC.

mader-miers
ENGINEERING, INC
3909 W. CONGRESS ST., SUITE 101 - LAFAYETTE, LOUISIANA 70506
PHONE NO. (337) 989-8047 FAX (337) 988-3219

Date of Survey:	Book:	Page:	ENGINEER P.L.M.	CHECKED P.L.M.
			DRAWN BY R.T.G.	APPROVED P.L.M.
			PRN 2063	SPN 12

STATE OF LOUISIANA
STEPHEN J. BURNHAM
REG. NO. 24029
REGISTERED PROFESSIONAL ENGINEER IN CIVIL ENGINEERING

4/10/08

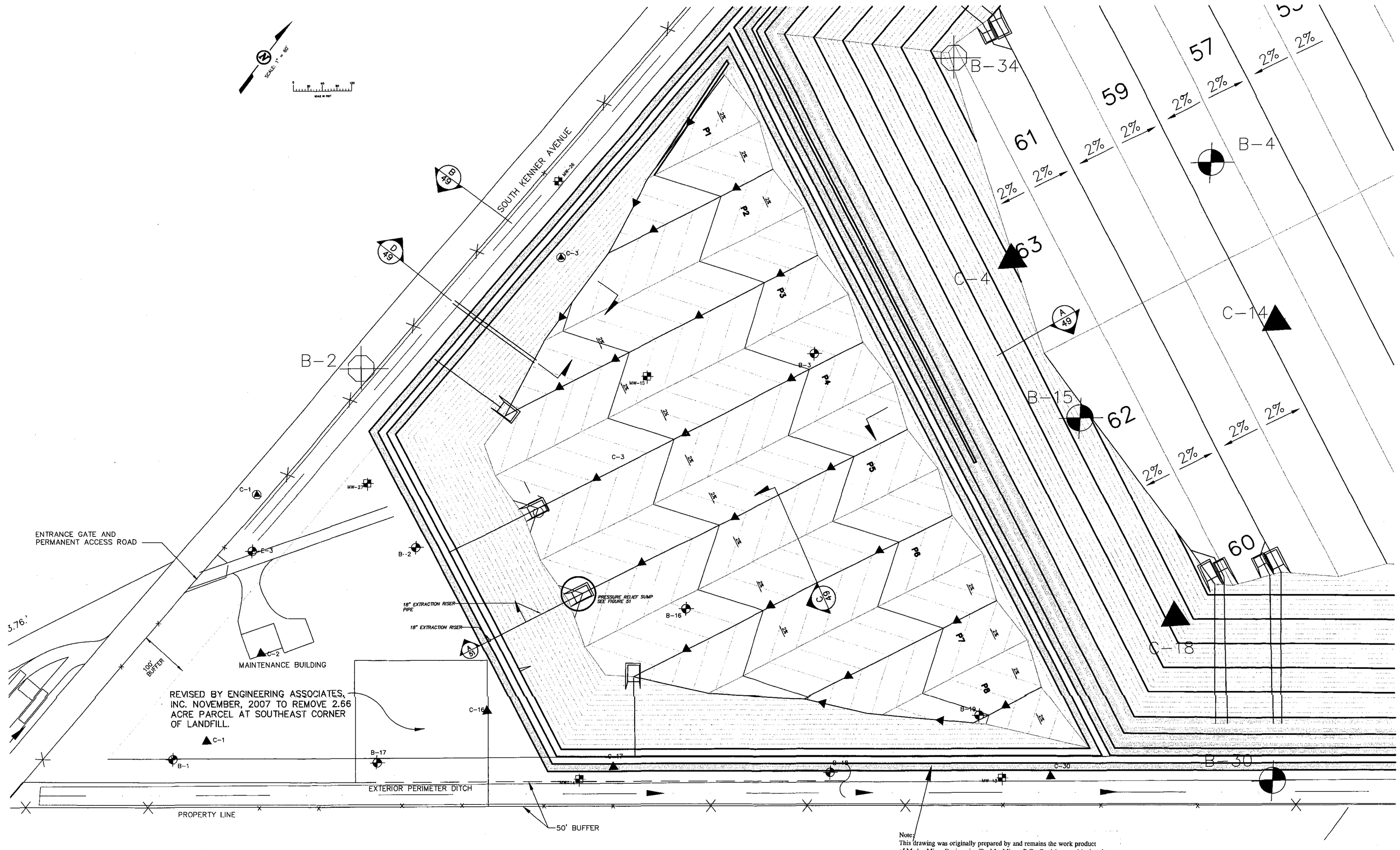

Note:
This drawing was originally prepared by and remains the work product of Mader-Miers Engineering/Paul L. Miers, P.E. Revisions to this drawing that are the work product of Engineering Associates/Stephen J. Burnham, P.E. are specifically noted as such hereon.

ORIGINAL DRAWING PREPARED UNDER SUPERVISION OF PAUL L MIERS, ON SEPTEMBER 29, 2003. ANY REVISIONS MADE TO THE SITE OR DRAWINGS AFTER SEPTEMBER 29, 2003 ARE NOT THE RESPONSIBILITY OF PAUL L MIERS, PAUL L MIERS, ENGINEERING, LLC, OR MADER MIERS ENGINEERING, INC. BY ATTACHING SEAL AND SIGNING THIS DRAWING I AM VERIFYING THAT THE ORIGINAL DRAWING WAS PREPARED UNDER MY DIRECTION.

STATE OF LOUISIANA
PAUL L. MIERS
REG. No. 20741
REGISTERED PROFESSIONAL ENGINEER IN ENVIRONMENTAL ENGINEERING

PAUL L MIERS, P.E. REG. NO. 20741

DATE	DESCRIPTION	BY
9/26/03	REVISED TO ADDRESS NOD MOD. NO. 7	

REVISED

FIGURE 48

LEACHATE TREATMENT POND SITE PLAN

RIVER BIRCH LANDFILL

RIVER BIRCH LANDFILL, INC.

PLM PAUL L. MIERS ENGINEERING, LLC

CIVIL ENGINEERS — LAND SURVEYORS

104 WESTMARK BLVD, SUITE 2A
PHONE (337) 981-7792

LAFAYETTE, LOUISIANA 70506
FAX(337) 981-7797

STATE OF LOUISIANA
STEPHEN J. BURNHAM
REG. No. 22823
REGISTERED PROFESSIONAL ENGINEER IN CIVIL ENGINEERING
4/10/08

Date of Survey:	Book:	Page:	ENGINEER	CHECKED
			DRAWN BY	APPROVED
			BPN ____	SPN ____

FILE ____ DWG ____

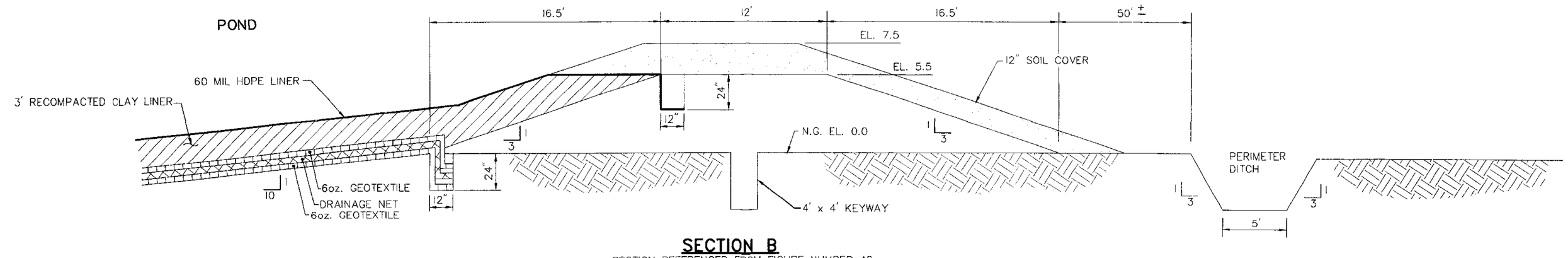

SECTION B

SECTION REFERENCED FROM FIGURE NUMBER 48

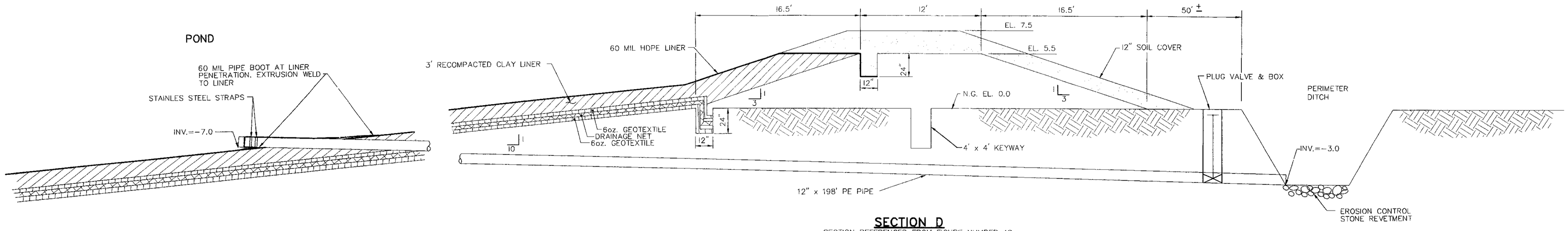

SECTION D

SECTION REFERENCED FROM FIGURE NUMBER 48

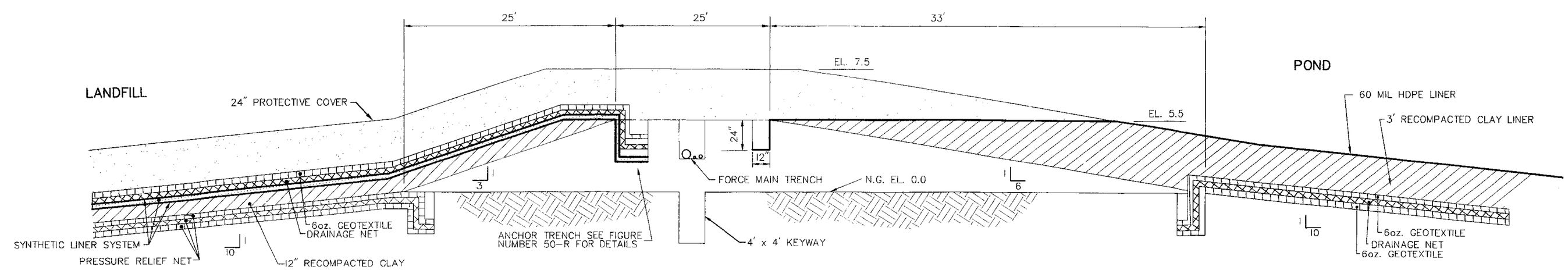

NOTE: SEE DETAIL I FIGURE NUMBER 50-R FOR A COMPLETE DESCRIPTION OF LANDFILL COMPOSITE LINER SYSTEM

SECTION A

SECTION REFERENCED FROM FIGURE NUMBER 48

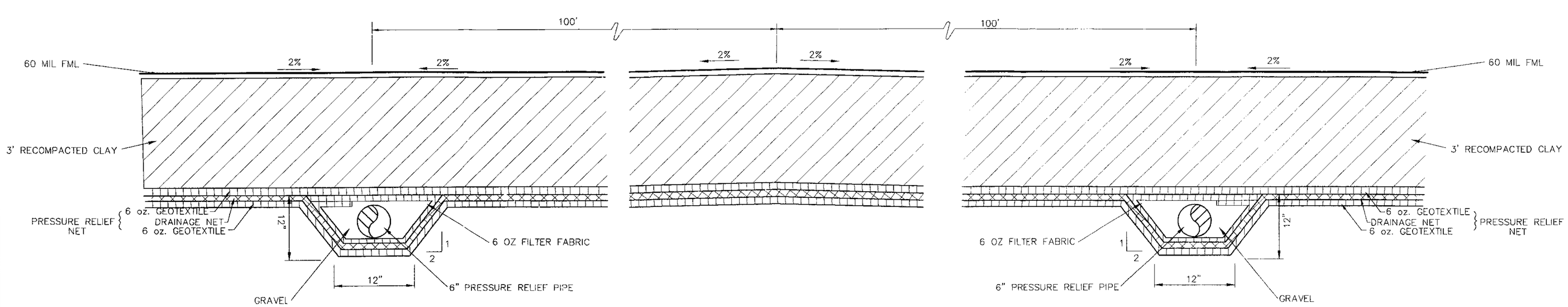

SECTION C
LEACHATE TREATMENT POND TYPICAL LINER & PRESSURE RELIEF TRENCH

SECTION REFERENCED FROM FIGURE 48

DATE	DESCRIPTION	BY
9/26/03	REVISED TO ADDRESS NOD MOD. NO. 7	
4-27-99	REVISED FIGURE REFERENCES, AND DETAILS FOR CLARITY	JPM/PLM

REVISED

FIGURE 49
LEACHATE TREATMENT POND TYPICAL DETAILS
RIVER BIRCH LANDFILL
RIVER BIRCH LANDFILL, INC.

PAUL L. MIERS ENGINEERING, LLC
CIVIL ENGINEERS — LAND SURVEYORS
104 WESTMARK BLVD, SUITE 2A
PHONE (337) 981-7792
LAFAYETTE, LOUISIANA 70506
FAX(337) 981-7797

STATE OF LOUISIANA — PAUL L. MIERS — REG. No. 20741 — REGISTERED PROFESSIONAL ENGINEER — CIVIL ENGINEERING

Date of Survey:	Book:	Page:	ENGINEER PLM	CHECKED PLM
			DRAWN BY KCS	APPROVED PLM
			BPN 2063	SPN 12

FILE D DWG

K:\2063\12\DWG\2063\FIG49.DWG Mon Sep 29 12:10:33 2003

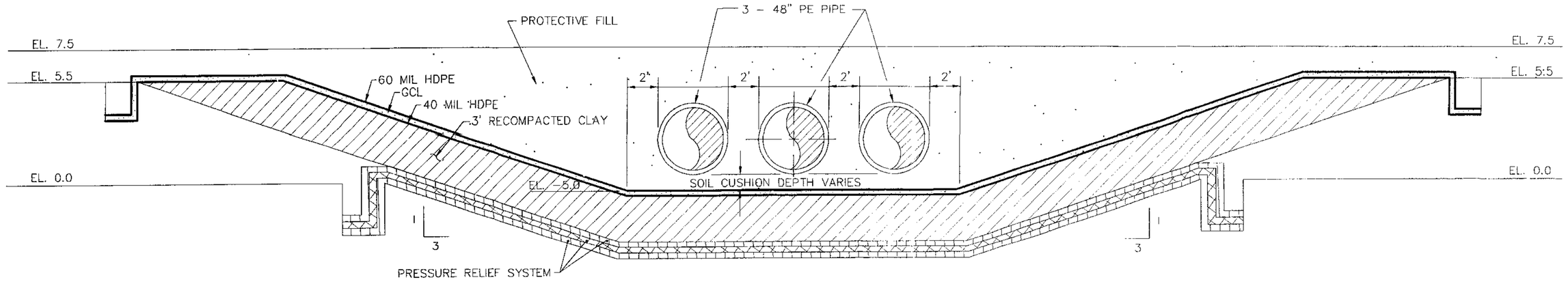

SECTION B

N.T.S.

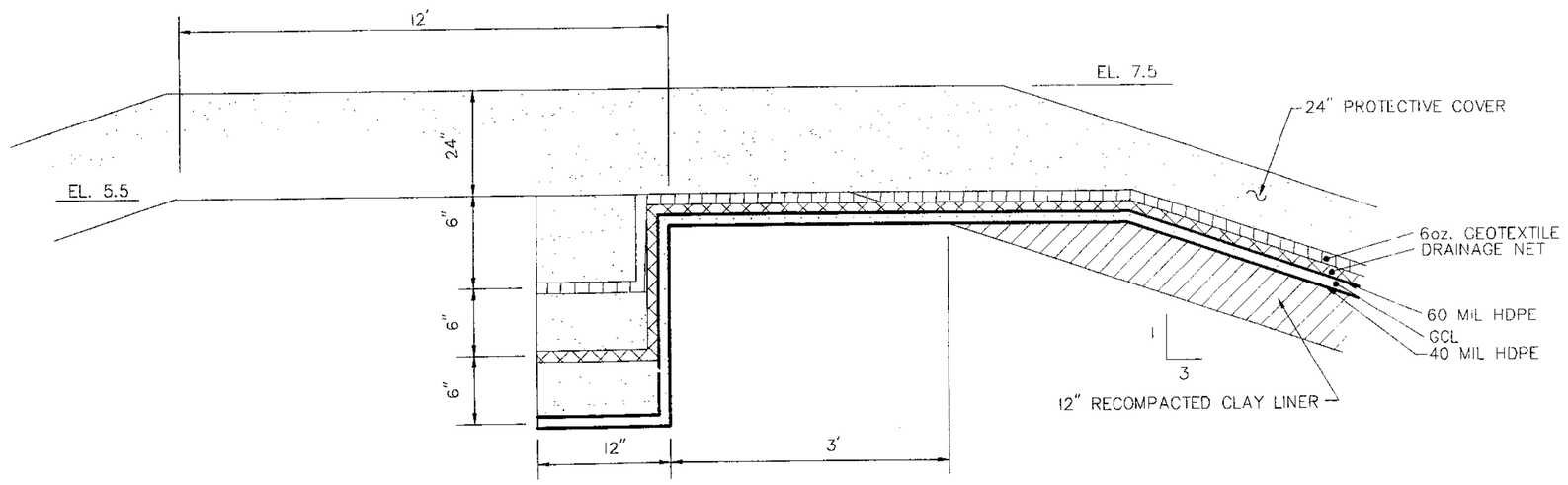

TYPICAL LANDFILL ANCHOR TRENCH LEACHATE COLLECTION NET AND SYNTHETIC LINER SYSTEM

N.T.S.

AREA TO BE COVERED BY 36" RECOMPACTED CLAY AND 60 MIL HDPE

AREA TO BE COVERED BY SYNTHETIC LINER SYSTEM

AREA TO BE COVERED BY 36" RECOMPACTED CLAY AND SYNTHETIC LINER SYSTEM

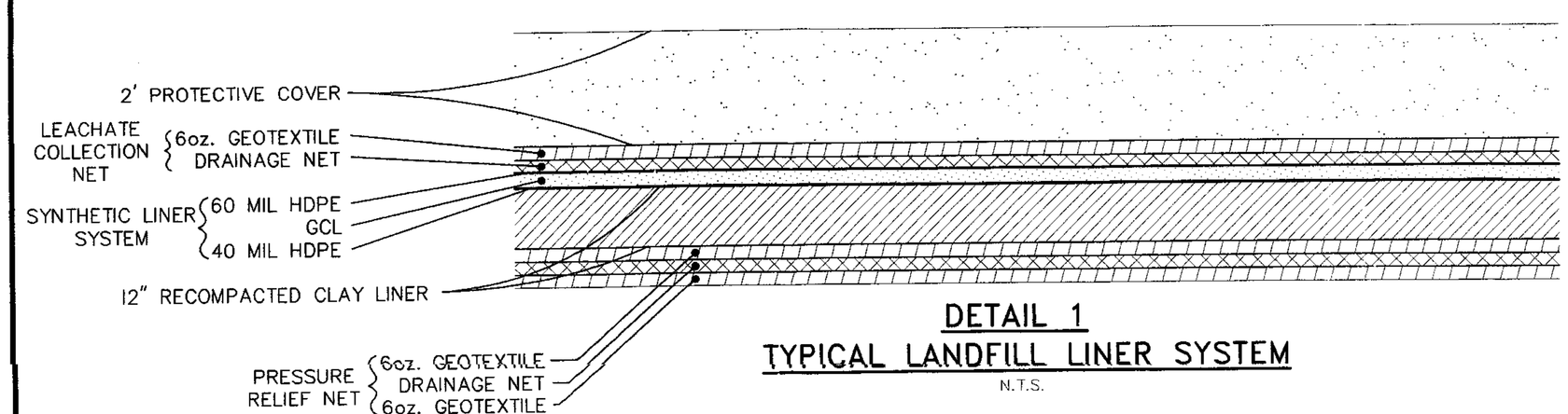

DETAIL 1
TYPICAL LANDFILL LINER SYSTEM

N.T.S.

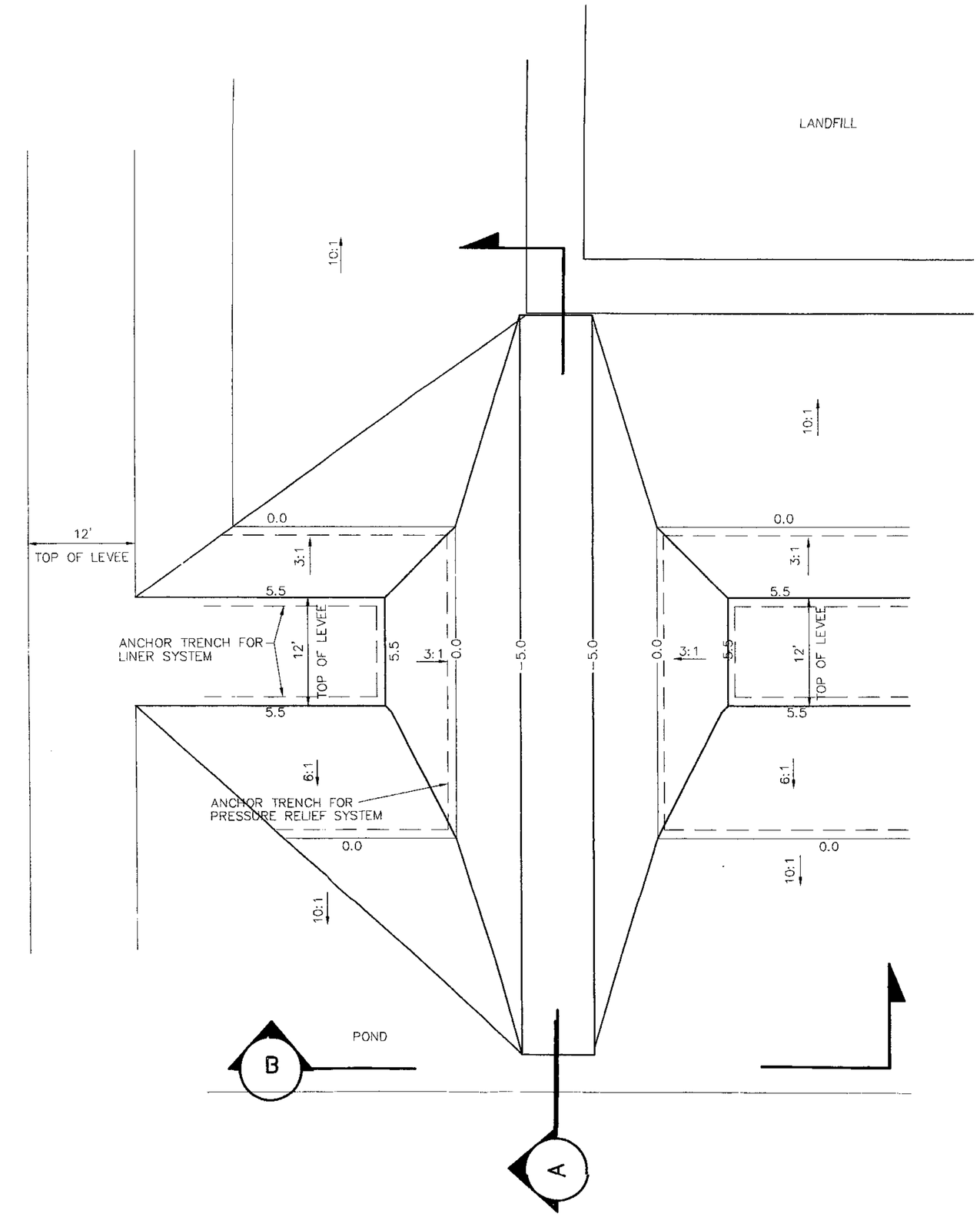

PLAN VIEW
LEACHATE TREATMENT POND EXCAVATION PLAN
INFLUENT PIPING SYSTEM

PLAN VIEW REFERENCED FROM FIGURE NUMBER 48

N.T.S.

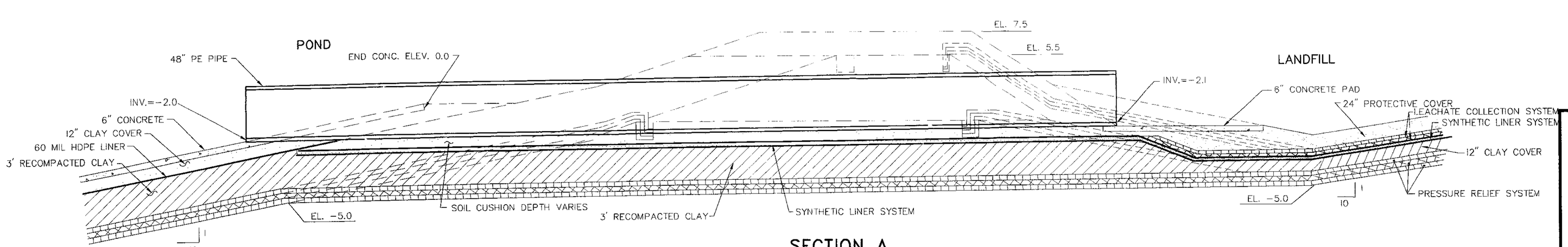

SECTION A

SECTION REFERENCED FROM THIS FIGURE & 48

FIGURE 50
MISCELLANEOUS DETAILS AND SECTIONS

RIVER BIRCH LANDFILL
RIVER BIRCH LANDFILL, INC.

DATE	DESCRIPTION	BY
9/26/03	REVISED TO ADDRESS NOD MOD. NO. 7	
4-27-99	REVISED SECTIONS AND DETAILS FOR BETTER CLARIFICATION	JPM/PLM

REVISED

PAUL L. MIERS ENGINEERING, LLC
CIVIL ENGINEERS — LAND SURVEYORS
104 WESTMARK BLVD, SUITE 2A
PHONE (337) 981-7792
LAFAYETTE, LOUISIANA 70506
FAX(337) 981-7797

STATE OF LOUISIANA — PAUL L. MIERS — REG. No. 20741 — REGISTERED PROFESSIONAL ENGINEER — CIVIL ENGINEERING

Date of Survey:	Book:	Page:	ENGINEER PLM	CHECKED PLM
			DRAWN BY KCS	APPROVED PLM
			BPN 2063	SPN 05

FILE D DWG

K:\2063\12\DWG\2063\F1650.dwg Mon Sep 29 12:12:14 2003

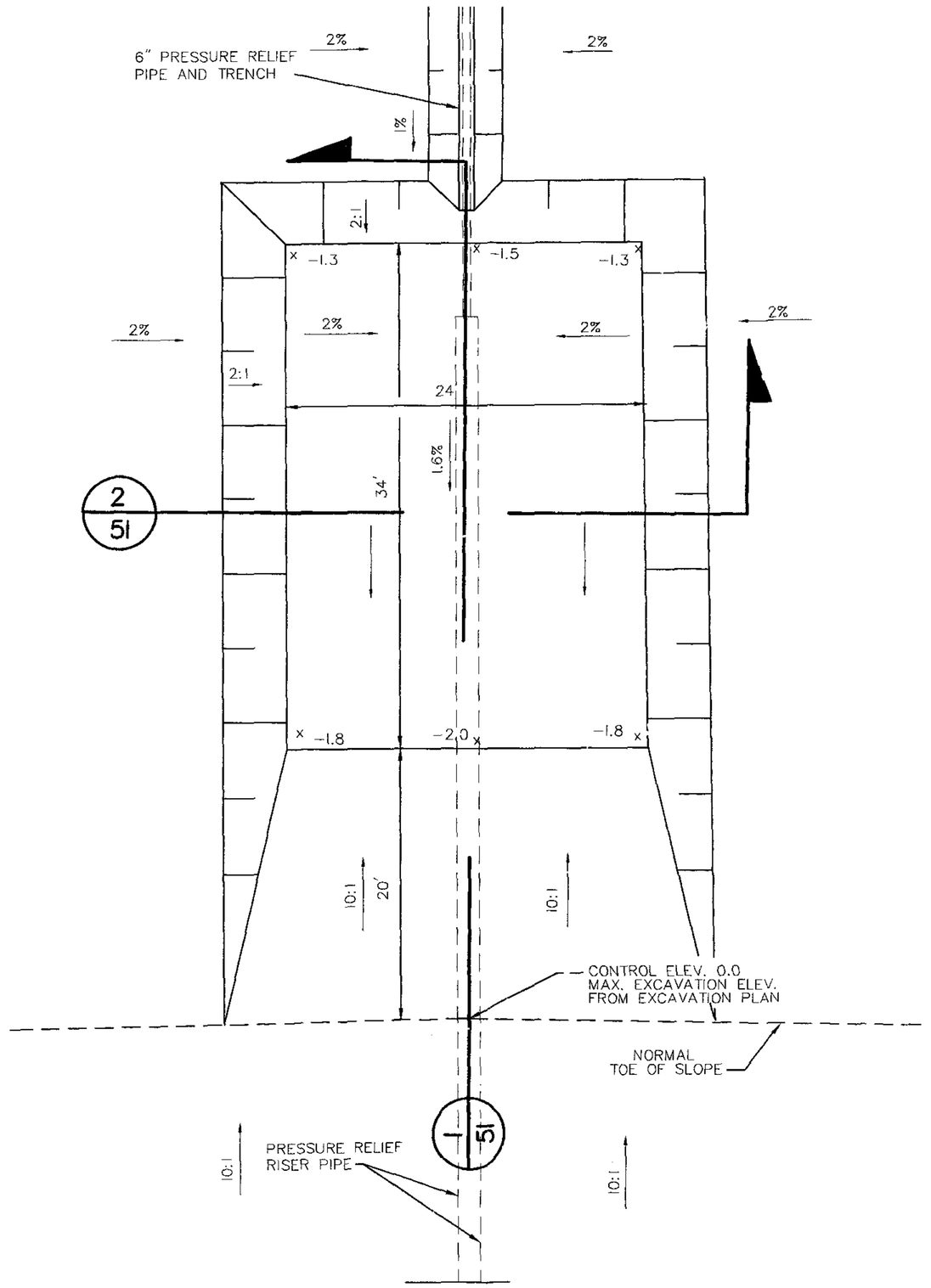

PLAN VIEW
PRESSURE RELIEF SUMP IN POND
PLAN VIEW REFERENCE THIS FIGURE

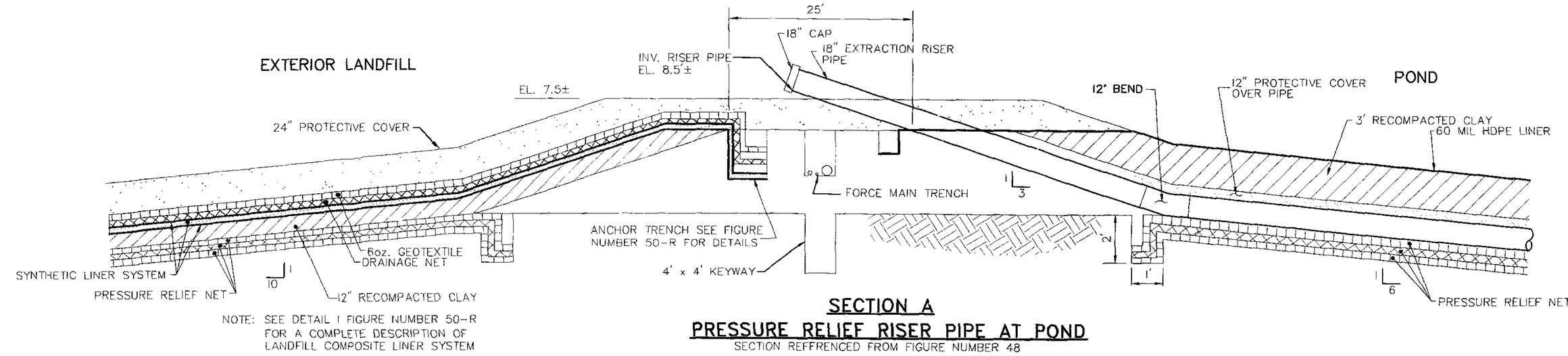

SECTION A
PRESSURE RELIEF RISER PIPE AT POND
SECTION REFFRENCED FROM FIGURE NUMBER 48

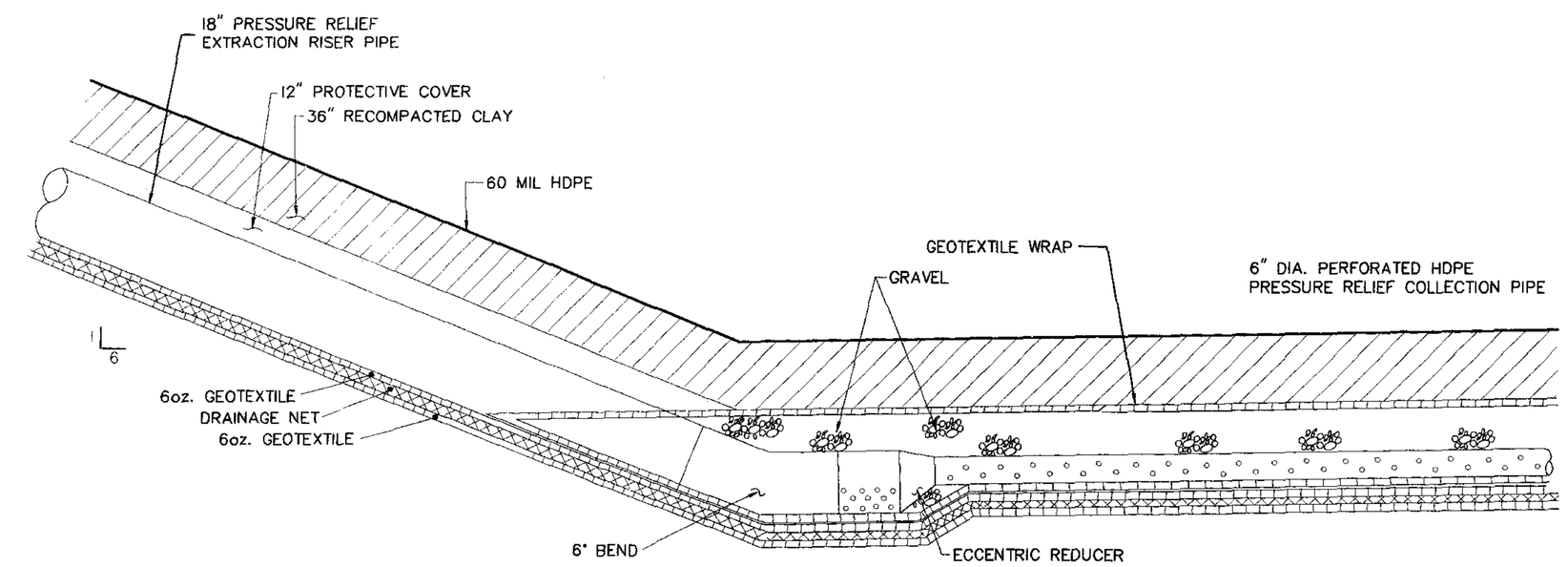

SECTION 1
PRESSURE RELIEF COLLECTION SUMP AT POND
SECTION REFERENCED FROM THIS FIGURE

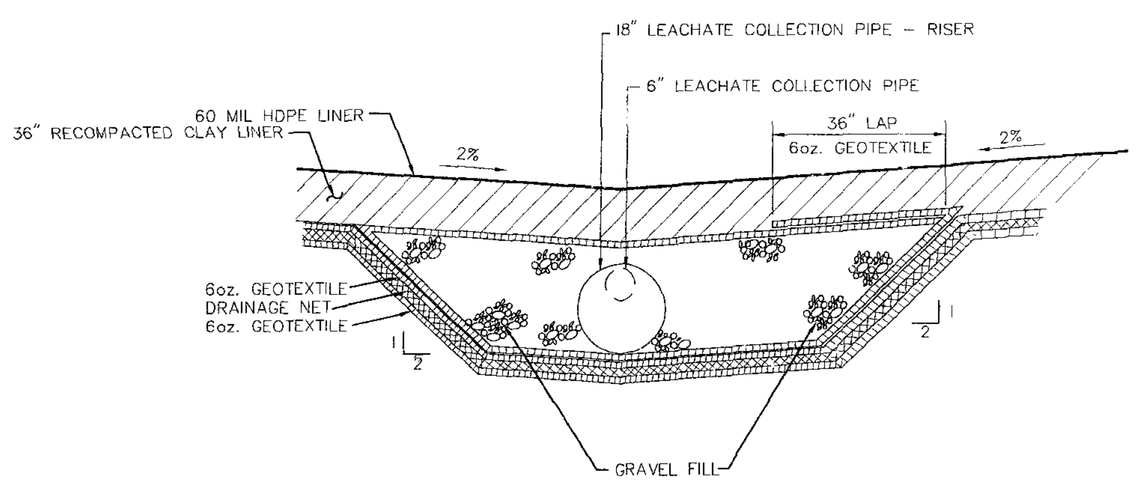

SECTION 2
SECTION REFERENCED FROM THIS FIGURE

FIGURE 51
MISCELLANEOUS DETAILS AND SECTIONS
RIVER BIRCH LANDFILL
RIVER BIRCH LANDFILL, INC.

PAUL L. MIERS ENGINEERING, LLC
CIVIL ENGINEERS
LAND SURVEYORS
104 WESTMARK BLVD, SUITE 2A
PHONE (337) 981-7792
LAFAYETTE, LOUISIANA 70506
FAX(337) 981-7797

STATE OF LOUISIANA
PAUL L. MIERS
REG. No. 20741
REGISTERED PROFESSIONAL ENGINEER
CIVIL ENGINEERING

Date of Survey:	Book:	Page:	ENGINEER PLM	CHECKED PLM
			DRAWN BY RTG	APPROVED PLM

DATE	DESCRIPTION
9/26/03	REVISED TO ADDRESS NOD MOD. NO. 7

2063\12\DWG\2063\FIG51.dwg Mon Sep 29 12:13:01 2003

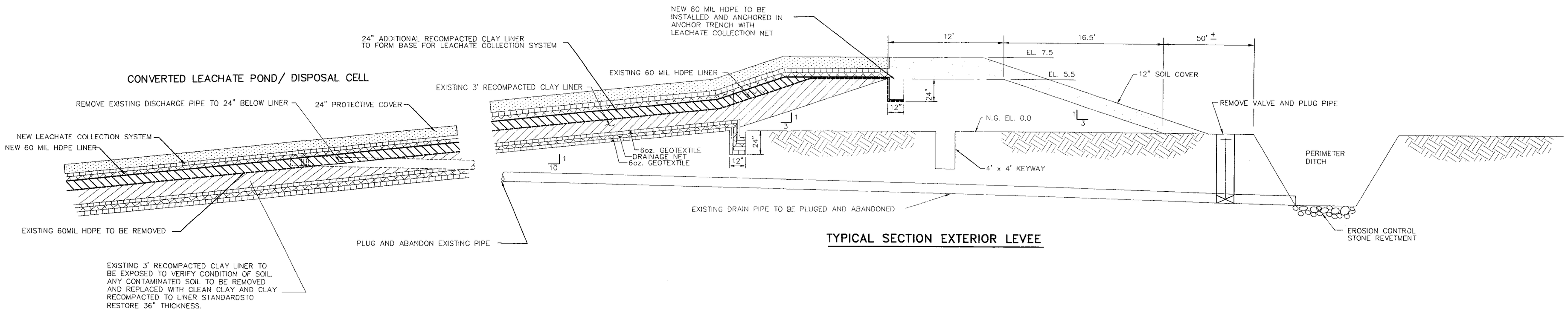

TYPICAL SECTION EXTERIOR LEVEE

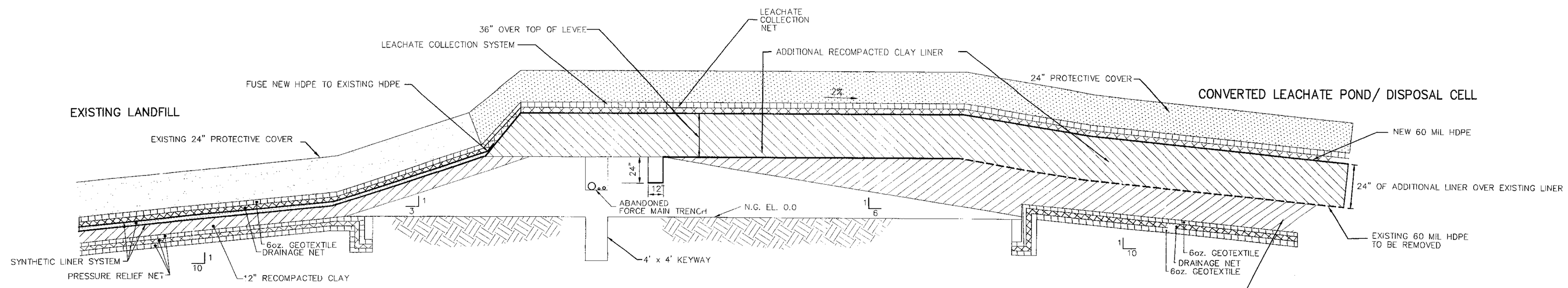

TYPICAL SECTION AT INTERIOR LEVEE

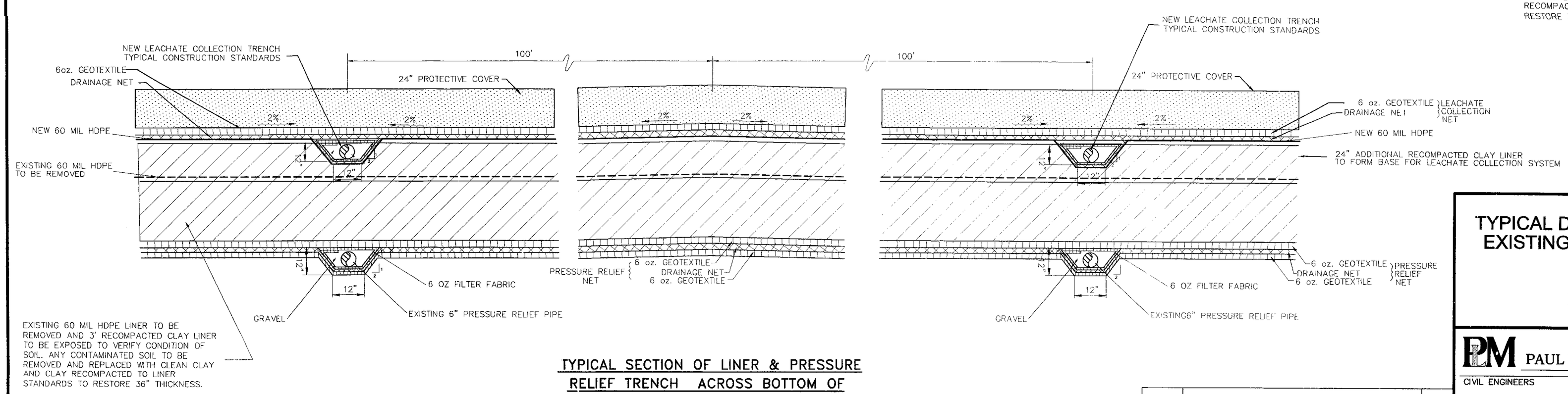

TYPICAL SECTION OF LINER & PRESSURE RELIEF TRENCH ACROSS BOTTOM OF CONVERTED LEACHATE TREATMENT POND

DATE	DESCRIPTION	BY
	REVISED	

FIGURE 52
TYPICAL DETAILS FOR RECONSTRUCTION OF EXISTING LEACHATE TREATMENT POND TO WASTE DISPOSAL CELL
RIVER BIRCH LANDFILL
RIVER BIRCH LANDFILL, INC.

OCTOBER 27,2003

PLM PAUL L. MIERS ENGINEERING, LLC
CIVIL ENGINEERS — LAND SURVEYORS
104 WESTLAKE BLVD, SUITE 2A
PHONE (337) 981-7792
LAFAYETTE, LOUISIANA 70506
FAX(337) 981-7797

STATE OF LOUISIANA — PAUL L. MIERS REG. No. 20741 REGISTERED PROFESSIONAL ENGINEER — CIVIL ENGINEERING — 10-28-03

Date of Survey:	Book:	Page:	ENGINEER PLM	CHECKED PLM
			DRAWN BY KCS	APPROVED PLM
			BPN 2063	SPN 12

FILE D DWG

K:\2063\12\DWG\2063\F1052.dwg Tue Oct 28 13:06:28 2003

Note:
This drawing was originally prepared by and remains the work product of Mader-Miers Engineering/Paul L. Miers, P.E. Revisions to this drawing that are the work product of Engineering Associates/Stephen J. Burnham, P.E. are specifically noted as such hereon.

LEGEND

- GAS COLLECTION LINE
- GAS EXTRACTION WELL
- GAS HEADER LINE
- GAS COLLECTION SUMP

KELVIN TRACT LANDFILL

ORIGINAL DRAWING PREPARED UNDER SUPERVISION OF PAUL L MIERS, ON MARCH 24, 2003. ANY REVISIONS MADE TO THE SITE OR DRAWINGS AFTER MARCH 24, 2003 ARE NOT THE RESPONSIBILITY OF PAUL L MIERS, PAUL L MIERS, ENGINEERING, LLC, OR MADER MIERS ENGINEERING, INC. BY ATTACHING SEAL AND SIGNING THIS DRAWING I AM VERIFYING THAT THE ORIGINAL DRAWING WAS PREPARED UNDER MY DIRECTION.

[signature] 4-8-08
PAUL L MIERS, P.E. REG. NO. 20741

STATE OF LOUISIANA ★ PAUL L. MIERS REG. No. 20741 REGISTERED PROFESSIONAL ENGINEER IN ENVIRONMENTAL ENGINEERING ★

DATE	DESCRIPTION	BY
3-19-03	MODIFICATION NO. 7	
5-3-99	REVISION FIGURE NUMBER REFERENCES	

REVISED

FIGURE J1
GAS EXTRACTION SYSTEM

RIVER BIRCH LANDFILL
RIVER BIRCH LANDFILL, INC.

mader-miers
ENGINEERING, INC
3909 W. CONGRESS ST., SUITE 101 – LAFAYETTE, LOUISIANA 70506
PHONE NO. (337) 989-8047 FAX (337) 988-3219

Date of Survey:	Book:	Page:	ENGINEER P.L.M.	CHECKED P.L.M.
			DRAWN BY R.T.G.	APPROVED P.L.M.
			RPN 2063	SPN 12

FILE D DWG

STATE OF LOUISIANA ★ STEPHEN J. BURNHAM REG. No. 24029 REGISTERED PROFESSIONAL ENGINEER IN CIVIL ENGINEERING ★ 4/10/08

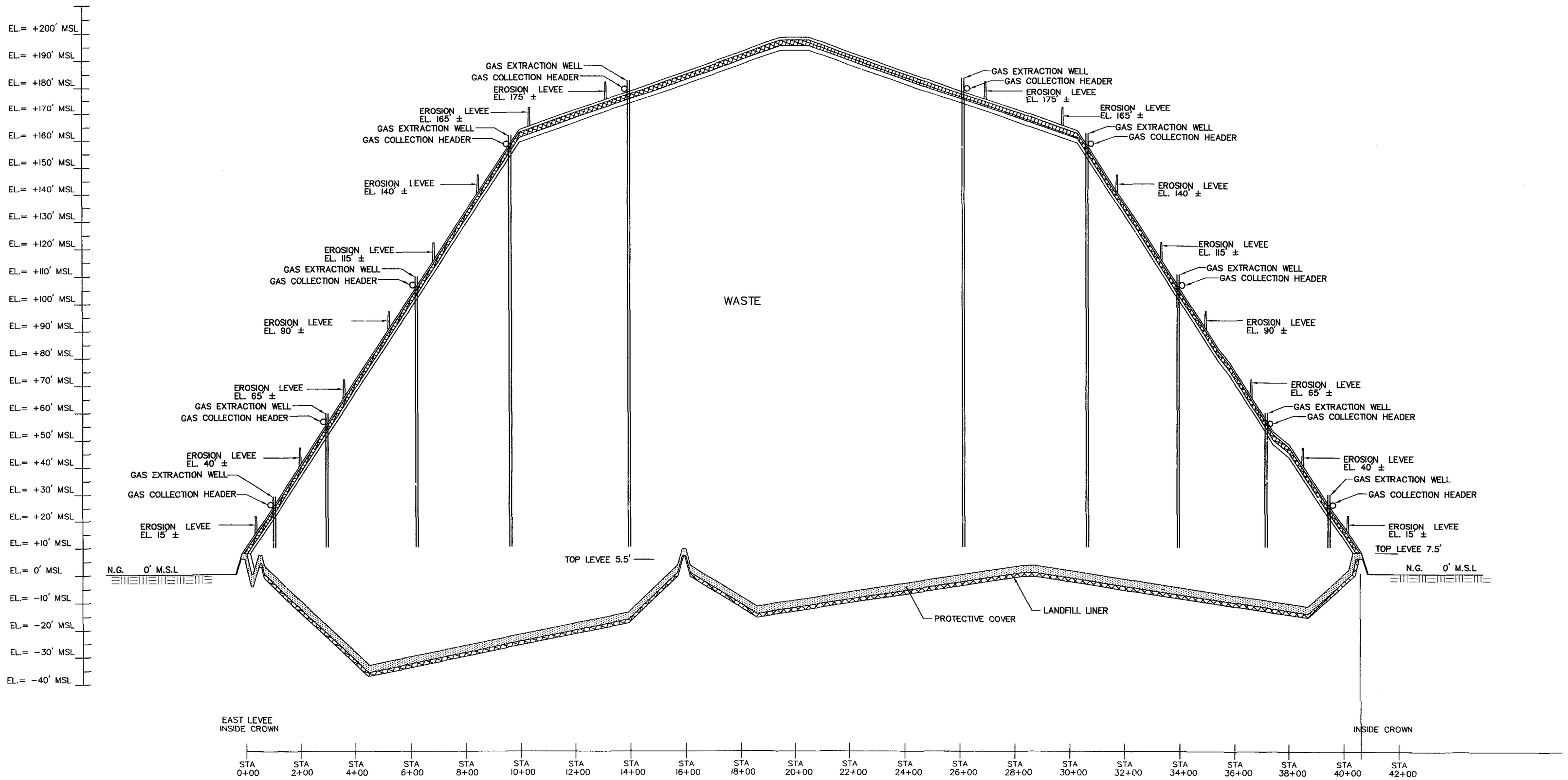

EAST WEST SECTION A

HORZ SCALE 1" = 100'
VERT SCAEL 1" = 20'

SECTION REFERENCED FROM FIGURES 32, 33 AND 35
SECTION SHOWN IS COMPOSIT AND NOT ALL
IMPROVEMENTS OR PRESENT ON EACH BASE FIGURE

FIGURE J2
TYPICAL LANDFILL SECTION GAS EXTRACTION SYSTEM

RIVER BIRCH LANDFILL
RIVER BIRCH LANDFILL, INC.

mader-miers
ENGINEERING, INC
3909 W. CONGRESS ST., SUITE 101 - LAFAYETTE, LOUISIANA 70506
PHONE NO. (337) 989-8047 FAX (337) 988-3219

STATE OF LOUISIANA
PAUL L. MIERS
REG. No. 20741
REGISTERED PROFESSIONAL ENGINEER IN ENVIRONMENTAL ENGINEERING
3-24-03

DATE	DESCRIPTION	BY
3-19-03	MODIFICATION NO. 7	PLM
4-27-99	REVISED TO SHOW GAS COLLECTION HEADER BELOW LINER AND SHOW 60 MIL ON TOP OF 24" CLAY FINAL COVER	PLM

REVISED

Date of Survey:	Book:	Page:	ENGINEER PLM	CHECKED PLM
			DRAWN BY RTG	APPROVED PLM
			DRN 2063	CON 12

Mon Mar 24 13:36:53 2003