Cytec Industries Inc.

Fortier Manufacturing Complex

Waggaman, Louisiana
Jefferson Parish

EPA I.D. No. LAD 008175390

Hazardous Waste
Permit Application

Volume VII

June, 1998

Cytec Industries Inc.

Fortier Manufacturing Complex

Waggaman, Louisiana
Jefferson Parish

EPA I.D. No. LAD 008175390

Hazardous Waste
Permit Application

Volume VII

June, 1998

Summary of Contents

Volume I
Summary of Contents
Table of Contents
Transmittal Letter
Computer Diskettes
IT Response
Certification
Form HW-1
Part I//Part A
Chapter Responses

Volume II
Appendices A through M

Volume III
Appendices N through Q

Volume IV
Appendices R through BB

Volume V
Appendices CC through JJ

Volume VI
Appendices KK through LL

Volume VII
Appendices MM through PP

TABLE OF CONTENTS

Volume VII

Appendix MM	LAC 33:V.523.B. LAC 33:V.523.D.
Appendix NN	LAC 33:V.529 LAC 33:V.3105
Appendix OO	LAC 33:V.536
Appendix PP	LAC 33:V.536 LAC 33:V.1701

Appendix MM

LAC 33:V.523.B.
LAC 33:V.523.D.

Hazardous Waste Tank Systems

Cytec Industries Fortier Facility LAD 008 175 390

Drawing Index (by Application Drawing Number)

No.	*By*	*Drawing Type*	*Drawing No.*	*Drawing Title*
T1	Cytec	PFD	HW PFD	Hazardous Waste System Process Flow Diagram
T2	Cytec	P&ID	10-0-119	Effluent / WWCB Filtration P&ID
T3	Cytec	P&ID	10-0-121	Waste Disposal - NSB Stripper Overhead Miscellaneous Effluent Filtrate
T4	Cytec	P&ID	10-0-122	Waste Disposal System WWCB Tanks North & South P&ID
T5	Cytec	P&ID	10-0-125	Effluent Injection Stations & Wells P&ID
T6	Cytec	P&ID	36-0-19	Process Sewer Collection System
T7	Cytec	P&ID	36-0-21	Miscellaneous Effluent Tanks P&ID
T8	Cytec	P&ID	09-0-86	ACH Stock Tanks and Wastewater System
T9	Eckco Fabricators	Tank / Vessel	1826-2	Sand Filter (Nameplate)
T10	Eckco Fabricators	Tank / Vessel	1826-3	Sand Filter (Section)
T11	Belco Industrial Equipment	Tank / Vessel	55575	Bill of Material / Drawing List
T12	Belco Industrial Equipment Div.	Tank / Vessel	C-74168	Internal Assembly & Conn Details for 96" Dia x 5'-0" Straight Filter
T13	Bell Industries Inc	Tank / Vessel	D-1101-1	Equipment # 100-6 NSB Backwash Tank

No.	By	Drawing Type	Drawing No.	Drawing Title
T14	Louisiana Maintenance Services	Tank / Vessel	221-1	18" OD Lab Collection Tank
T15	Ronningen-Petter	Tank / Vessel	RP-Cat Data	Automatic Multiplex Filters (Four sheets, marked catalog data)
T16	DeLaval Separator Co.	Tank / Vessel	S9608-032A	CT # 8 Immedium Filter
T17	Nadler, Inc	Tank / Vessel	PV-28056	84" ID x 11'-0" T/T Upflow Media Filter (Model No. U-7)
T18	Albach Cembell	Tank / Vessel	C-1820-1	Waste Water Secondary Sand Filter
T19	U.S. Filter	Tank / Vessel	1760-86-900	Filter Ass'y HRD-V50
T20	U.S. Filter	Tank / Vessel	7276-13-954	Filter Ass'y
T21	Fisher Tank Company	Tank / Vessel	M-508244	1,000,000 Gal Fuel Oil Storage Tank
T22	Maloney Crawford	Tank / Vessel	F9261-0A	Bottom Layout
T23	Anderco, Inc.	Tank / Vessel	ED87-235-1	Erection Diagram One: 93'-0" dia x 40'-0" high CRT
T24	Badger	Tank / Vessel	E1532-73A-Q	Wastewater Column Bottoms Tank MF-307 (Secondary Filter Feed Tank)
T25	GATX	Tank / Vessel	1-4515	Erection Diagram
T26	CBI	Tank / Vessel	962081-1	General Arangement 10'-6" dia x 15'-5" high DRT TA-402
T27	CBI	Tank / Vessel	962081-3	Bottom Assembly 10'-6" dia x 15'-5" high DRT TA-402
T28	Wyatt Metal & Boiler Works	Tank / Vessel	HWE-23918	25'-0" ID x 16'-0" High API 12C Umbrella Roof Tank Section Thru Shell

No.	By	Drawing Type	Drawing No.	Drawing Title
T29	Anderco, Inc	Tank / Vessel	ED87-235-2	Two 30'-0" dia. X 30'-0" High Umb Roof Tanks Cyanamid Fortier Plant WWCB
T30	Cytec	Containment	10-1-45	AN WTA Enviro Upgrade Containment Area Concrete Plan Sht 1 of 2
T31	Cytec	Containment	10-1-46	AN WTA Enviro Upgrade Containment Area Concrete Plan Sht 2 of 2
T32	Cytec	Containment	10-1-50	AN WTA Enviro Upgrade WWCB Tanks N & S Piling & Fdn Plans, Sect & Det
T33	Cytec	Containment	10-1-51	AN WTA Misc Tank Foundations Plans & Sect Sht 1 of 2
T34	Cytec	Containment	10-1-52	AN WTA Misc Tank Foundations Plans & Sect Sht 2 of 2
T35	Cytec	Containment	10-1-53	Misc Tank Foundations Sections and Details
T36	Cytec	Containment	10-1-61	Foundation for NSB Backwash Tank
T37	Cytec	Containment	36-1-14	Miscellaneous Effluent Tanks Containment Area Concrete Plan, Sect, & Detls
T38	Cytec	Containment	36-1-15	Miscellaneous Effluent Tanks Containment Area Concrete Sections & Details
T39	Cytec	Containment	36-1-16	Miscellaneous Effluent Tanks Tank MET 2 Foundation Plan, Sect, & Details
T40	Cyro	Containment	9-1-65	MMA Control Building Vestibule Concrete Details

Hazardous Waste Tank Systems

Cytec Industries Fortier Facility LAD 008 175 390

Drawing Index (by Tank Number)

Tank No. and Name		*Drawing Type*	*Drawing No.*
100-5 A	RCB Filter A		
		PFD	T1
		P&ID	T3
		Tank / Vessel	T9
		Tank / Vessel	T10
		Containment	T31
100-5 B	RCB Filter B		
		PFD	T1
		P&ID	T3
		Tank / Vessel	T11
		Tank / Vessel	T12
		Containment	T31
100-5 C	RCB Filter C		
		PFD	T1
		P&ID	T3
		Tank / Vessel	T11
		Tank / Vessel	T12
		Containment	T31
100-6	RCB / MET Backwash Tank		
		PFD	T1
		P&ID	T3
		Tank / Vessel	T13
		Containment	T31
		Containment	T34
		Containment	T36
101-52	MMA Lab Collection Tank		
		PFD	T1
		P&ID	T8
		Tank / Vessel	T14
		Containment	T40

Tank No. and Name		*Drawing Type*	*Drawing No.*
CF-401 A	WW Cartridge Filter		
		PFD	T1
		P&ID	T2
		Tank / Vessel	T15
		Containment	T31
CF-401 B	WW Cartridge Filter		
		PFD	T1
		P&ID	T2
		Tank / Vessel	T15
		Containment	T31
CF-401 C	WW Cartridge Filter		
		PFD	T1
		P&ID	T2
		Tank / Vessel	T15
		Containment	T31
CF-401 D	WW Cartridge Filter		
		PFD	T1
		P&ID	T2
		Tank / Vessel	T15
		Containment	T31
F-401 A	WW Primary Filter A		
		PFD	T1
		P&ID	T2
		Tank / Vessel	T16
		Containment	T31
F-401 B	WW Primary Filter B		
		PFD	T1
		P&ID	T2
		Tank / Vessel	T16
		Containment	T31
F-401 C	WW Secondary Filter C		
		PFD	T1
		P&ID	T2
		Tank / Vessel	T17
		Containment	T31

Tank No. and Name		Drawing Type	Drawing No.
F-401 D	WW Secondary Filter D		
		PFD	T1
		P&ID	T2
		Tank / Vessel	T18
		Containment	T31
HRD-V50 A	MET Filter A		
		PFD	T1
		P&ID	T3
		Tank / Vessel	T19
		Containment	T31
HRD-V50 B	MET Filter B		
		PFD	T1
		P&ID	T3
		Tank / Vessel	T19
		Containment	T31
HRD-V50 C	MET Filter C		
		PFD	T1
		P&ID	T3
		Tank / Vessel	T20
		Containment	T31
HRD-V50 D	MET Filter D		
		PFD	T1
		P&ID	T3
		Tank / Vessel	T20
		Containment	T31
MET-1	Miscellaneous Effluent Tank 1		
		PFD	T1
		P&ID	T6
		P&ID	T7
		Tank / Vessel	T21
		Tank / Vessel	T22
		Containment	T37
		Containment	T38

Tank No. and Name		*Drawing Type*	*Drawing No.*
MET-2	Miscellaneous Effluent Tank 2		
		PFD	T1
		P&ID	T6
		P&ID	T7
		Tank / Vessel	T23
		Containment	T37
		Containment	T38
		Containment	T39
MF-307	Secondary Filter Feed Tank		
		PFD	T1
		P&ID	T2
		Tank / Vessel	T24
		Containment	T30
		Containment	T33
		Containment	T35
T-500	MET Injection Tank		
		PFD	T1
		P&ID	T3
		Tank / Vessel	T25
		Containment	T31
		Containment	T34
		Containment	T35
TA-402	WWCB Well Injection Tank		
		PFD	T1
		P&ID	T2
		Tank / Vessel	T26
		Tank / Vessel	T27
		Containment	T31
		Containment	T34
		Containment	T35
TA-403	Catalyst Settling Tank		
		PFD	T1
		P&ID	T2
		Tank / Vessel	T28
		Containment	T30
		Containment	T33

Tank No. and Name		*Drawing Type*	*Drawing No.*
TA-404	Primary Filter Feed Tank		
		PFD	T1
		P&ID	T2
		Tank / Vessel	T28
		Containment	T30
		Containment	T33
TA-501 A	WWCB Backwash Tank - North		
		PFD	T1
		P&ID	T4
		Tank / Vessel	T29
		Containment	T30
		Containment	T32
TA-501 B	WWCB Backwash Tank - South		
		PFD	T1
		P&ID	T4
		Tank / Vessel	T29
		Containment	T30
		Containment	T32

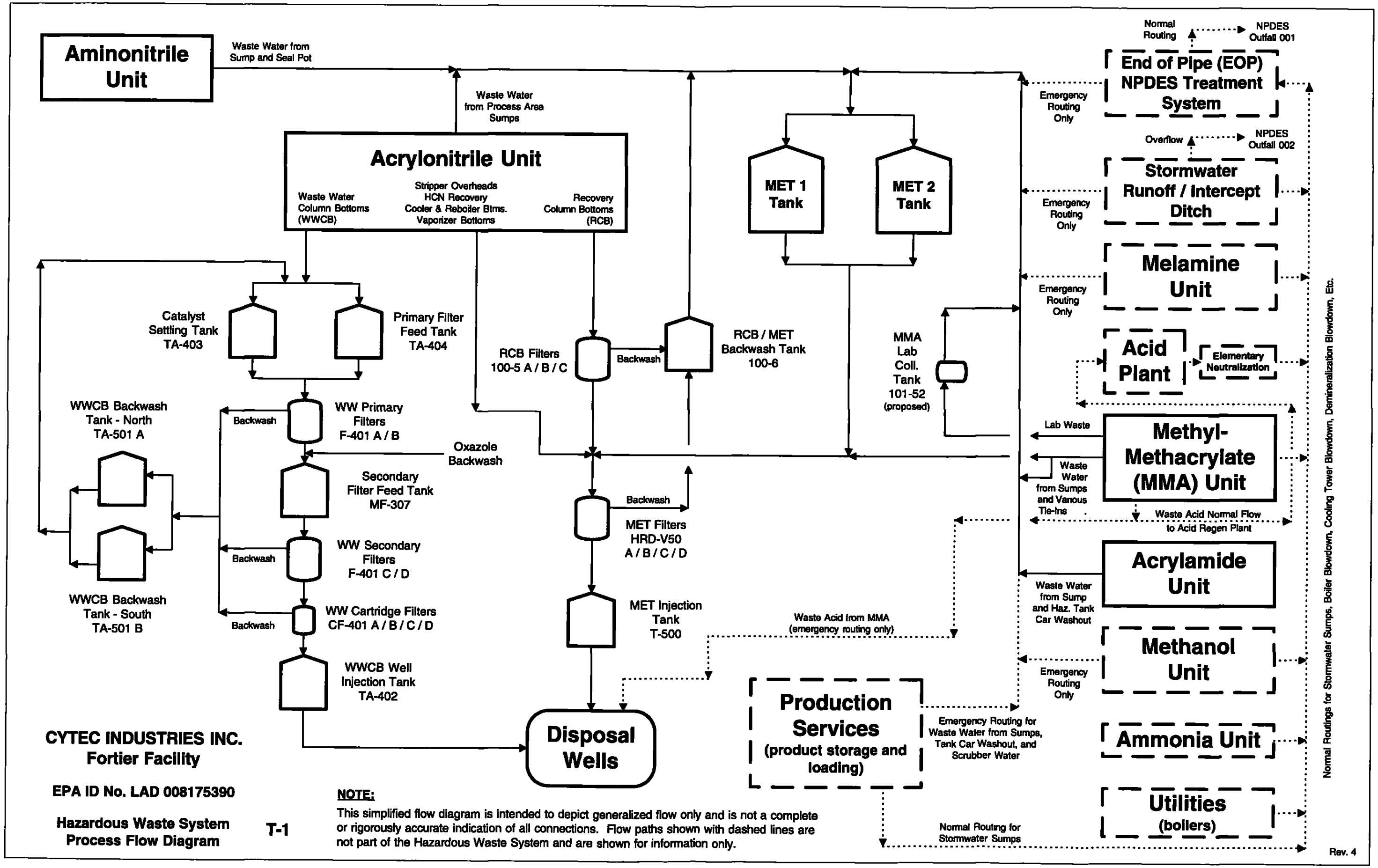

CYTEC INDUSTRIES INC.
Fortier Facility

EPA ID No. LAD 008175390

Hazardous Waste System Process Flow Diagram **T-1**

NOTE:
This simplified flow diagram is intended to depict generalized flow only and is not a complete or rigorously accurate indication of all connections. Flow paths shown with dashed lines are not part of the Hazardous Waste System and are shown for information only.

Reference Sheet

REF+51828

12/29/99 6:05 AM

Reference Sheet

REF+52850

01/03/00 9:51 AM

Reference Sheet

REF+53356

01/04/00 9:00 AM

Reference Sheet

REF+53357

01/04/00 9:00 AM

Reference Sheet

REF+53358

01/04/00 9:00 AM

Reference Sheet

REF+53359

01/04/00 9:00 AM

Reference Sheet

REF+53360

01/04/00 9:00 AM

Reference Sheet

REF+53361

01/04/00 9:00 AM

Reference Sheet

REF+53362

01/04/00 9:00 AM

Reference Sheet

REF+53363

01/04/00 9:00 AM

Reference Sheet

REF+53364

01/04/00 9:00 AM

Reference Sheet

REF+53365

01/04/00 9:00 AM

Reference Sheet

REF+53366

01/04/00 9:00 AM

Reference Sheet

REF+53367

01/04/00 9:00 AM

Reference Sheet

REF+53368

01/04/00 9:00 AM

Reference Sheet

REF+53369

01/04/00 9:00 AM

Reference Sheet

REF+53370

01/04/00 9:00 AM

Reference Sheet

REF+53371

01/04/00 9:00 AM

Reference Sheet

REF+53372

01/04/00 9:00 AM

Reference Sheet

REF+53373

01/04/00 9:00 AM

Reference Sheet

REF+53374

01/04/00 9:00 AM

Reference Sheet

REF+53375

01/04/00 9:01 AM

Reference Sheet

REF+53376

01/04/00 9:01 AM

Reference Sheet

REF+53377

01/04/00 9:01 AM

Reference Sheet

REF+53378

01/04/00 9:01 AM

Reference Sheet

REF+53379

01/04/00 9:01 AM

Reference Sheet

REF+53380

01/04/00 9:01 AM

Reference Sheet

REF+53381

01/04/00 9:01 AM

Reference Sheet

REF+53382

01/04/00 9:01 AM

Reference Sheet

REF+53383

01/04/00 9:01 AM

Reference Sheet

REF+53384

01/04/00 9:01 AM

ITEM NO	QUA	DESCRIPTION

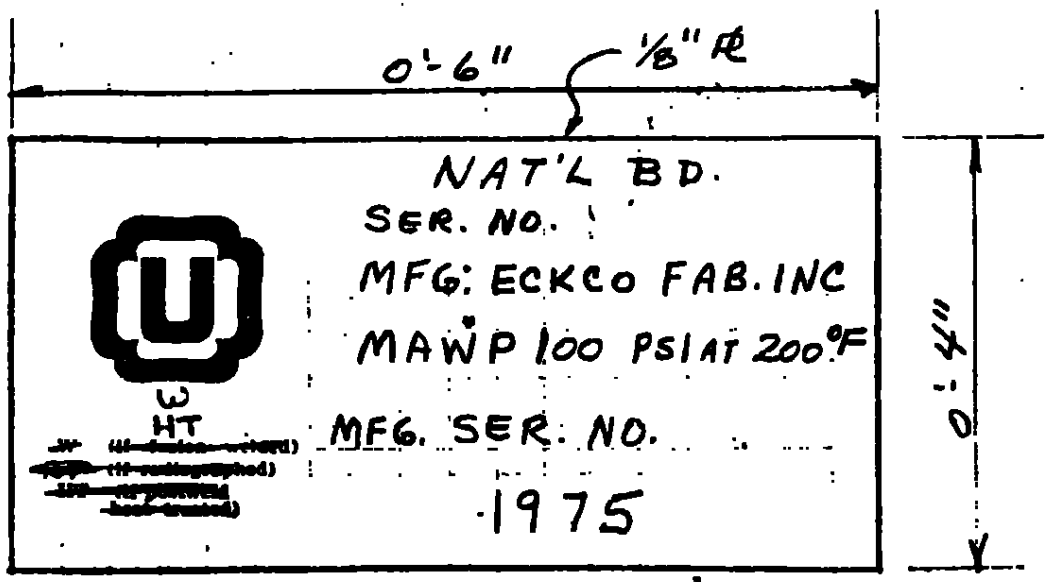

LETTERS TO BE 5/32" MIN HEIGHT

DEC 17

NAMEPLATE

	W P	ANNEAL	STRESS RELIEVE	HYDRO TEST	X-RAY	REV
	ROD	ECKCO FABRICATORS METAIRIE LOUISIANA			SPEC.	
	AIR TEST				CUST.	
	APPROX WT. EA.				CUST DWG. No / DATE	

T9

Cytec Industries Inc.
Fortier Plant
EPA I.D. No. LAD 008175390

S.O. 1826 SHT. NO. 2 of 1

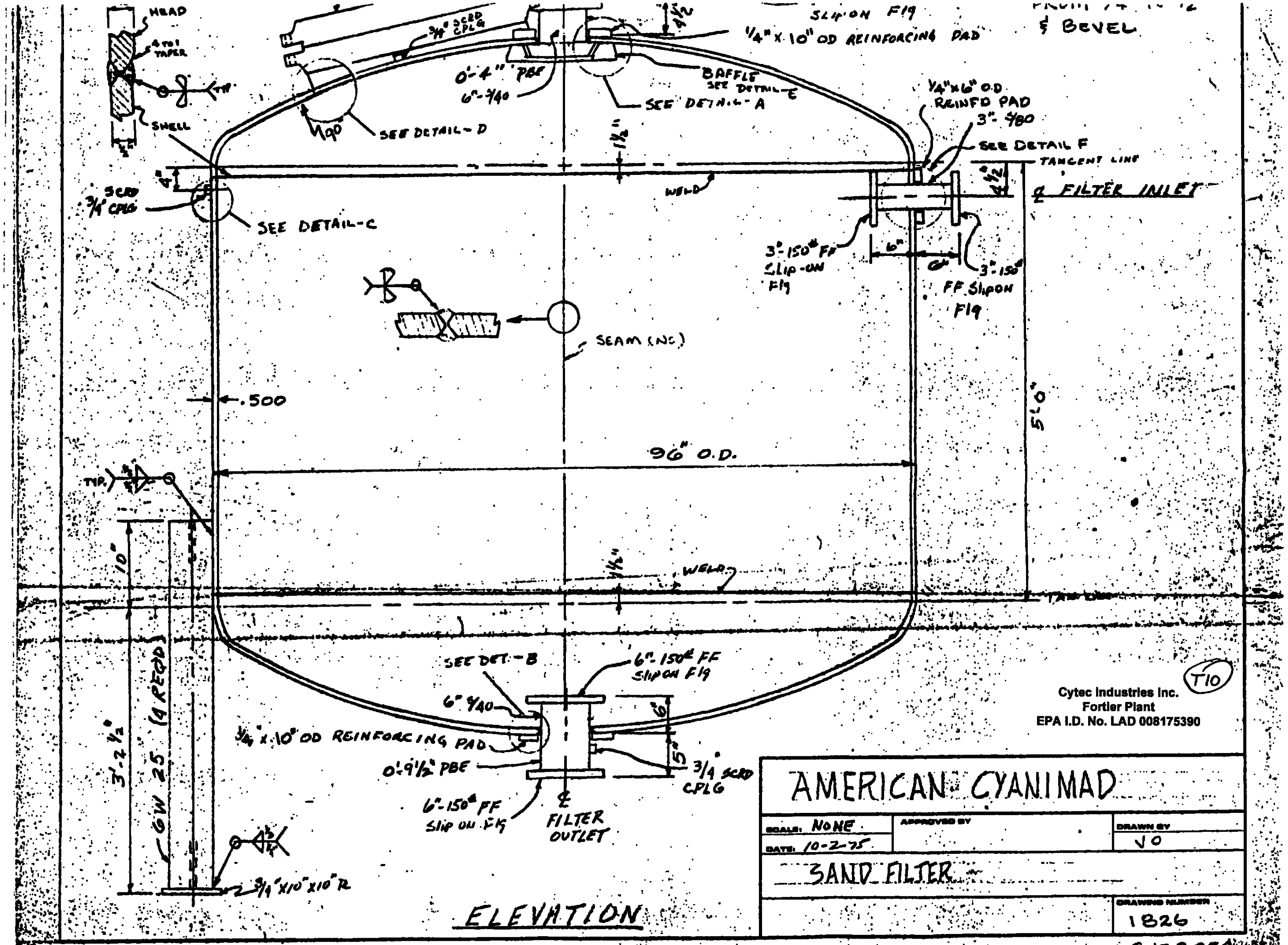
HEAD
4 to 1 TAPER
SHELL
3/4" SCRD CPLG
SEE DETAIL-C
SEE DETAIL-D
0'-4" PBE
6"-3/40
SEE DETAIL-A
BAFFLE SEE DETAIL-E
SLIP ON Flg
1/4" x 10" OD REINFORCING PAD
1/4"x6" O.D. REINFD PAD
3"-3/80
SEE DETAIL F
TANGENT LINE
℄ FILTER INLET
WELD
3"-150# FF SLIP-ON Flg
3"-150# FF SLIPON Flg
SEAM (NO)
.500
96" O.D.
5'-0"
WELD
SEE DET.-B
6"-150# FF SLIP ON Flg
6"-3/40
1/4" x 10" OD REINFORCING PAD
0'-9 1/2" PBE
6"-150# FF SLIP ON Flg
℄ FILTER OUTLET
3/4" SCRD CPLG
3'-2 1/2"
6W 25 (4 REQD)
3/4"x10"x10" R
ELEVATION
Cytec Industries Inc.
Fortier Plant
EPA I.D. No. LAD 008175390
T10
AMERICAN CYANIMAD
SCALE: NONE
DATE: 10-2-75
APPROVED BY
DRAWN BY
VO
SAND FILTER
DRAWING NUMBER
1826
SHT 3 OF 4

Made by R.S. Date 7/2/65
Checked By S.D. Date 7/6/65

BILL OF MATERIAL
BELCO INDUSTRIAL EQUIPMENT DIVISION INC.
PATERSON, N. J.
AMERICAN CYANAMID COMPANY
AVONDALE, LA.

Job No. 55575
Sheet 1 of 2
Revision No.

T11

Cytec Industries Inc.
Fortier Plant
EPA I.D. No. LAD 008175390

Item No.	DRWG NO.	No. Req.	DESCRIPTION	Size	Length	Material
1	A-53569-1	4	Welded Shell Details of 96" Dia. x 5'-0" Str. Filters,			
2			ASME code construction, stamp & certificate req'd,			
3			W.P. = 100 P.S.I.G., T.P. = 150 P.S.I.G., T.S. = 55,000			
4			P.S.I. spot radiograph & corrosion allowance required.			
5			Complete as shown. Mark each unit in addition to markings			
6			shown. "Code No. 100-5", "A", "B", "C", "D" progressively.			
7						
8	C-74168-1		Internal Assembly 96 18"			
9		202	Cu.Ft. #1 Anthracite 0.60 to 0.80 MM.			
10		370	Cu.Ft. Fine Sand See spec			
11		34	Cu.Ft. Coarse Sand			
12						
13	B-63976	4	Strainer System Complete as per B/M on drawing			
14						
15	C-70513-5	4	3" x (8) 1" Cast Distributor Hubs, as shown Pipe Tap "A"=			
16			3", No pipe tap "B", Pipe Tap "C" = 1".			C.I.
17						
18	A-53570	32	Inlet Laterals Sch. 40S as shown T.O.E.	1"	3'-7"	304 SS
19						
20			1A 6313 100-5 F.P. 2			

Made by ..... Date .....
Checked By ..... Date .....

BILL OF MATERIAL
BELCO INDUSTRIAL EQUIPMENT DIVISION INC.
PATERSON, N. J.

Job No 55575
Sheet 2 of 2
Revision No. .....

Item No.	DR'W'G NO.	No. Req.	DESCRIPTION		Size	Length	Material
1		4	Companion Flanges, 125#	F&D	3"		C.I.
2		4	Tees	Scr.	3"		Iron
3		8	Unions	Scr.	3"		Iron
4		4	Pipes	TBE	3"	3'-3 9/16"	W.S.
5		4	Pipes	TBE	3"	11 1/4"	W.S.
6		4	Nipples	TBE	3"	6 7/8"	W.S.
7		4	Nipples	TBE	3"	4"	W.S.
8		4	Ring Gaskets, 3" I.D. x 5 3/8" O.D. x 1/16" thk.				Rubber
9		16	Machine Bolts & Hex Nuts		5/8"	2 1/2"	Steel
10							
11		8	Flush Bushings	Scr.	3/4"x1/2"		Steel
12							
13							
14							
15							
16							
17							
18							
19							
20							

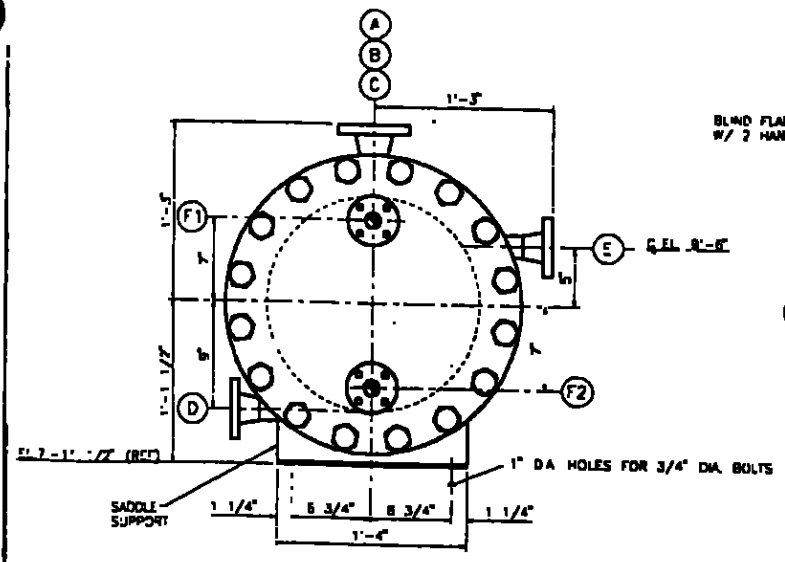

END VIEW
SCALE: 1 1/2"=1'-0"

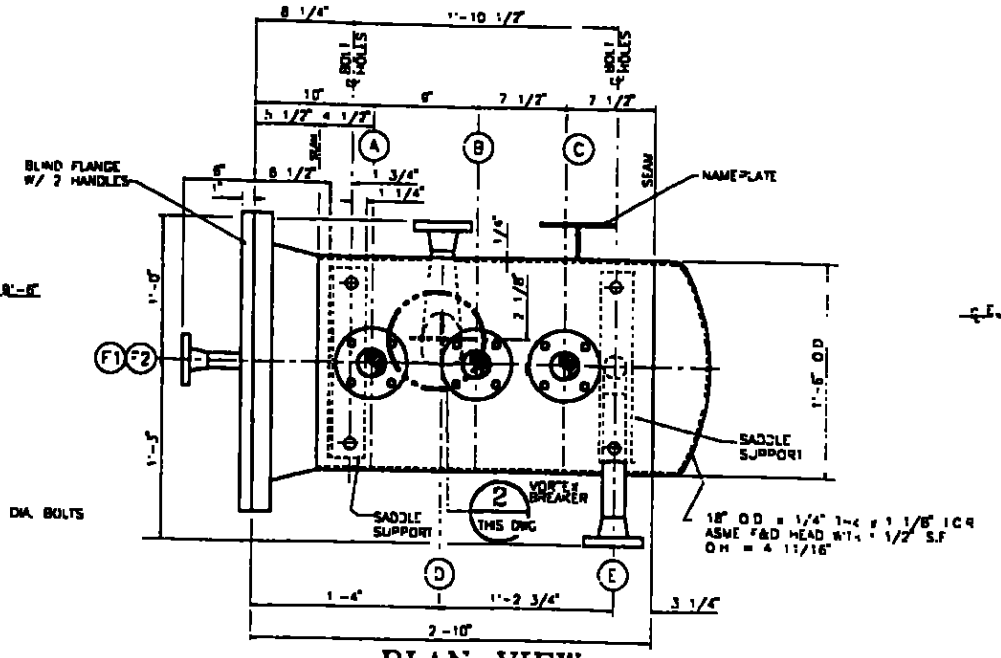

PLAN VIEW
SCALE: 1 1/2"=1'-0"

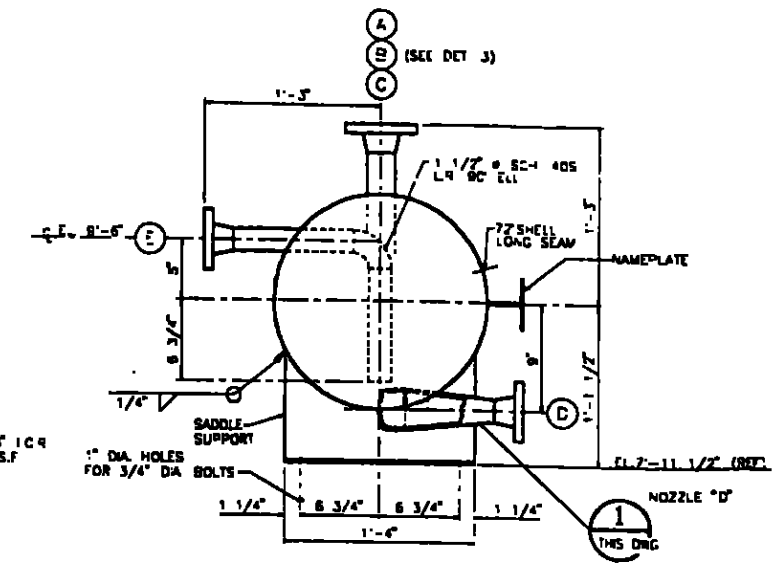

END VIEW
SCALE: 1 1/2"=1'-0"

NAMEPLATE

NAT'L BD NO 76
CERTIFIED BY
LOUISIANA MAINTENANCE SERVICES, INC.
HIGHWAY 10
HAHNVILLE
HAHNVILLE, LA 70057

U — stamp
W-L — construction
RT-1 — radiography
NONE — p.w.h.t.

50 psi at 400 °F
(MAX. ALLOW. WORK. PRESS.)
-20 °F at 60 psi
(MIN. DESIGN METAL TEMP.)
87-624 — serial no.
1997 — year built
vessel description: LAB COLLECTION TANK ITEM 101-52

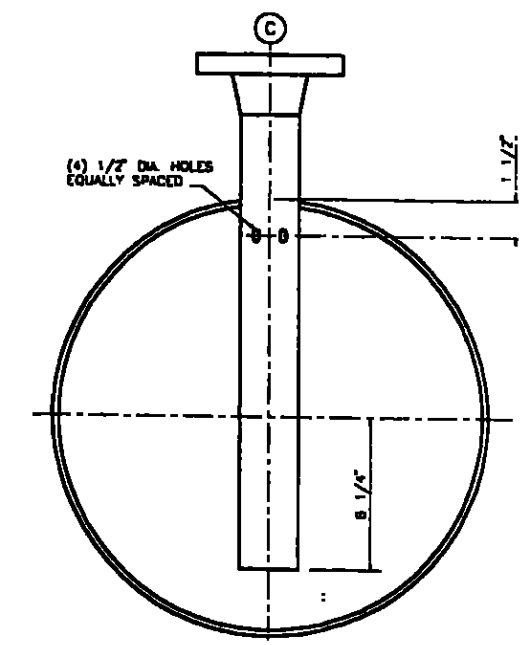

NOZZLE "C"
DETAIL 3 THIS DWG
SCALE: 3"=1'-0"

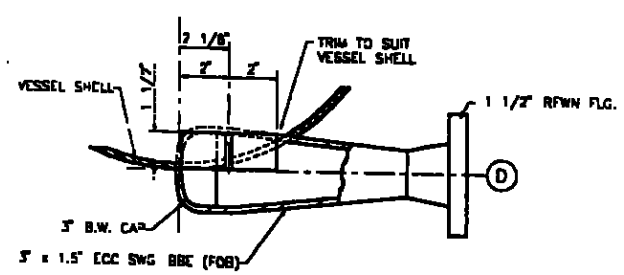

NOZZLE "D"
DETAIL 1 THIS DWG.
SCALE: 3"=1'-0"

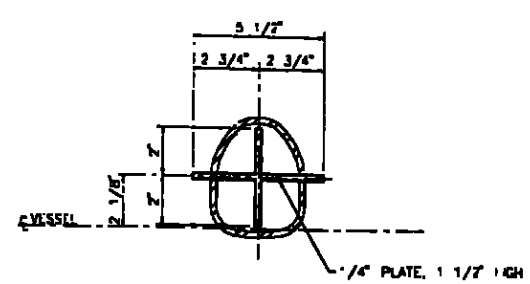

VORTEX BREAKER
DETAIL 2 THIS DWG.
SCALE: 3"=1'-0"

T14

Cytec Industries Inc.
Fortier Plant
EPA I.D. No. LAD 008175390

OWNER INFORMATION

OWNER: CYRO INDUSTRIES – MMA PLANT
ITEM NO.: 101-52
P.O. NO.: SW116191
ENGR: N/A
PROJECT:

REV.	BY	DATE	DESCRIPTION
2	CRC	7/97	CERTIFIED. AS-BUILTS.
1	CRC	6/97	CERTIFIED. ISSSUED FOR CONSTRUCTION.
0	CRC	6/97	ISSUED FOR APPROVAL

MARK	QTY.	SIZE	RATING	TYPE	BORE	FAB. DIM.	C2	WALL	OS & IS PROJECTION	THK	OD	ATT. DET.	WELD LEG A	WELD LEG B	SERVICE
F1/F2	2	1"	150#	RFWN	S/40S	7.315"	.250"	3"	----	----	----	7.3	1/4"	----	LEVEL INDICATOR
C	1	1.5"	150#	RFWN	S/40S	1.90"	.145"	6"	1/8"	----	----	7.3	1/4"	1/4"	VENT INLET
D	1	1.5"	150#	RFWN	S/40S	1.90"	.145"	DET	DET	----	----	7.3	1/4"	----	OUTLET/PUMP SUCTION
E	1	2"	150#	RFWN	S/40S	2.38"	.154"	6"	DET	----	----	7.3	1/4"	1/4"	RECYCLE INLET
B	1	2"	150#	RFWN	S/40S	2.38"	.154"	6"	1/8"	----	----	7.3	1/4"	1/4"	VENT / OVERFLOW
A	1	2"	150#	RFWN	S/40S	2.38"	.154"	6"	1/4"	----	----	7.3	1/4"	1/4"	LEVEL INDICATOR

NOZZLE SCHEDULE AND NOZZLE WELDING DETAILS

GENERAL NOTES

1. BOLT HOLES SHALL STRADDLE NATURAL CENTERLINES.
2. NOZZLE OUTSIDE PROJECTIONS ARE FROM CENTERLINE OF VESSEL TO FACE OF FLANGE
3. PAINTING IS NOT REQUIRED

DESIGN DATA

CODE CONSTRUCTION		ASME SEC VIII DIV 1 1995 ED 95 ADD
OTHER CONSTRUCTION		
CODE STAMP		"U" REQ'D.
DESIGN PRESSURE		50 PSIG (LETHAL SERVICE)
DESIGN TEMPERATURE		400 °F
CORROSION ALLOW.	HEAD	1/16 IN
	SHELL	1/16 IN
	NOZZLE	1/16 IN
RADIOGRAPH		FULL
STRESS RELIEVE		NONE REQ'D.
JOINT EFFICIENCY (SHELL)		100 %
JOINT EFFICIENCY (HEADS)		100 %
OPERATING PRESSURE		ATMOS.
OPERATING TEMPERATURE		100 °F
MAWP @ TEMP.		50 PSI @ 400°F
MAWP LIMITED BY		BLIND PLATE FLANGE
MDMT @ PRESS.		-20°F @ 50 PSI
CAPACITY		40 GALS
EST. WEIGHT EMPTY		856 LBS.
EST. WEIGHT FULL WATER		880 LBS.
EST. WEIGHT FULL OF PRODUCT		
EST. WT. OPERATING		
MAX SPECIFIC GRAVITY		1.0
HYDROSTATIC TESTS		80 PSIG
IMPACT TEST EXEMPT		UHA -51 (d) (1) (a)

MATERIAL DATA

SHELL	SA240-316L
HEAD	SA240-316L
NOZZLE NECK	SA312-316L-S
NOZZLE FLANGE	SA182-F316L
BODY FLANGE	SA182-F316L
PIPE FITTINGS	SA403-316L WPS
BLIND PLATE FLANGE	SA240-316L
REINFORCING PADS	NONE
NAMEPLATE BRACKET	SA240-300 SERIES
LIFTING LUGS	NONE REQ'D
GROUNDING CLIP	NONE REQ'D
SADDLE SUPPORT	SA240-304
BOLTS & NUTS	SA 193-B8M SA 194-8M
GASKETS, NOZZLES	1/16" GRAFOIL DHR

WELD DET. No.1 | WELD DET. No.2 | WELD DET. No.3 (NOZZLE NECK, 1/8" RAD TYPICAL, 3/16") | WELD DET. No.4 (NOZZLE NECK, 1/8" RAD, GRIND FLUSH) | WELD DET. No.5 (SCRD OR SW CPLG) | WELD DET. No.6 (SCRD. OR SW CPLG) | WELD DET. No.7 (1/8")

Louisiana Maintenance Services
P.O. BOX 1009
HAHNVILLE, LOUISIANA 70057
PH. (504) 783-2082 FAX (504) 783-6418

THIS DRAWING IS THE PROPERTY OF LOUISIANA MAINTENANCE SERVICES & SHALL NOT BE REPRODUCED, COPIED, LENT, OR EXHIBITED EXCEPT BY DIRECT WRITTEN AUTHORITY, USED FOR ANY PURPOSE OTHER THAN THAT FOR WHICH IT IS SPECIFICALLY FURNISHED, EXCEPT BY WRITTEN PERMISSION OF LMS.

DRAWN BY CRC	DATE 06/97	APPROVED BY	DATE
CHK. BY KHY	DATE 06/97	APPROVED BY	DATE
GROUP No. 101-52		LMS JOB No. 97-624	SCALE AS NOTED

TITLE: 18" OD LAB COLLECTION TANK — SHEET NO. — DWG. No. — REV.

Automatic Multiplex Filters

Ronningen-Petter Automatic Multiplex filters are one of the newest and most sophisticated innovations in modern filtration equipment. These units are identical in every way to the manual models described on page 6 except for the automation "package", which includes a differential pressure switch, a pneumatic programmer (either mounted on the filter frame or located remotely), and pneumatic valve operators for each of the filters. The unit shown at the right is an internal backwashing model with six elements, but multiples of any number in both internal and external types are also available. (See page 8.) Moreover, any manual Ronningen-Petter Multiplex can be readily converted in the field for automatic operation.

Unlike other automatic filters, that operate on a pre-set *time* cycle, the Ronningen-Petter units are controlled by the *pressure drop* between the inlet and outlet headers. The pressure drop at which backwashing will start can be easily pre-set (from 0 to 99 psi), and the duration of the backwash cycle is also fully adjustable to fit the exact requirements of your application. The units are also equipped with a manual start switch that permits the operator to initiate a backwash cycle at any time. He can also remove any filter from the unit without affecting the automatic operation of the remaining filters.

Required plant services for any automatic model (regardless of size) include a ready supply of 5 CFM of clean, dry air at approximately 80 psi plus 110-volt, 60-cycle electrical power.

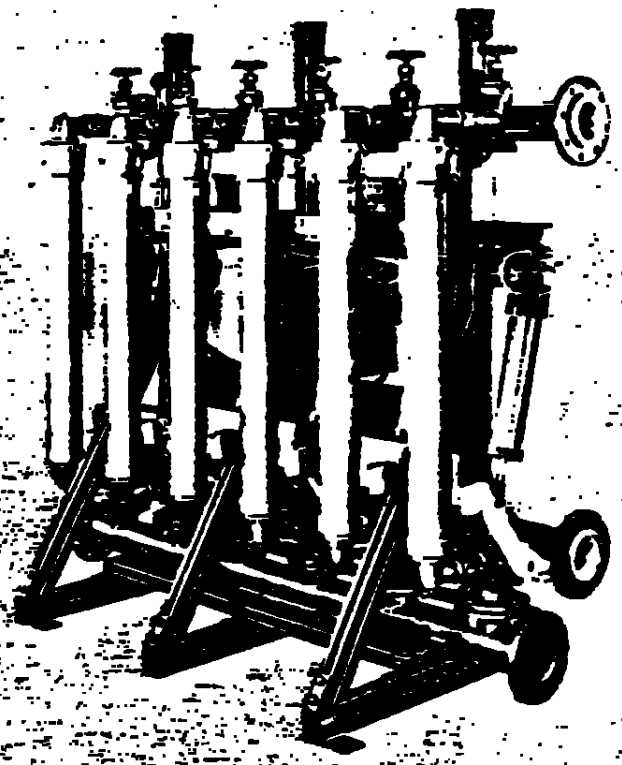

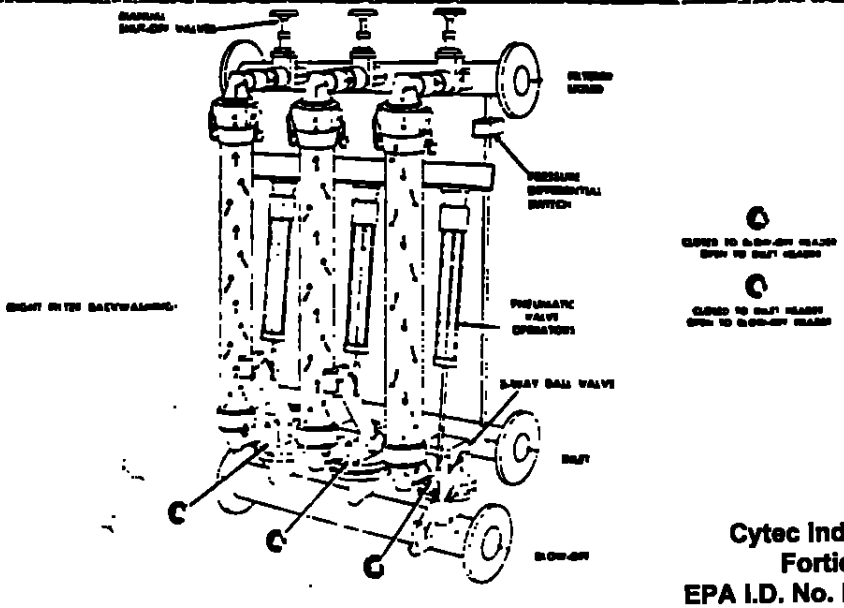

TIS

Selection Data

In general Ronningen-Petter filters are well suited to a broad range of industrial applications. They are available in a wide choice of materials (page 2), and with a variety of filter elements (page 3). The specification and capacity table below lists catalog models corresponding to the standard configurations described on pages 4 through 7. In addition to these, however, a great many non-standard models and modifications are also available for specialized applications. Because of the many factors that influence the proper selection of filters and strainers, Ronningen-Petter Company welcomes all inquiries on filtering problems and will be glad to assist you in making the best possible choice. Sales engineers and Representatives are located in principal industrial areas throughout the world.

MODEL NUMBER	BODY SIZE	(Stock numbers for viscous liquids.)					FILTER INLET AND OUTLET (in.)	PIPING INLET AND OUTLET (in.)	DIMENSIONS OF SINGLE FILTER ELEMENT (in.)	
1112	2½	30	8	7	5	2	1	1Y	2 x 12	75
1118	2½	45	18	30	8	3	1	1Y	2 x 18	112
1524	3	25	20	15	10	4	1½	1½Y	2¼ x 24	168
1536	3	30	25	20	15	6	1½	1½Y	2¼ x 36	256
2218	4	30	25	15	10	5	2	2Y	3¼ x 18	482
2236	4	50	50	35	20	10	2	2Y	3¼ x 36	864
3318	4	80	80	32	17	7	3	3Y	3¼ x 18	482
3336	4	84	48	42	23	13	3	3Y	3¼ x 36	864
3536	6	100	100	47	20	20	3	3Y	5¼ x 36	3594
D-1112	2½	30	8	7	5	2	1	1½Y	2 x 12	150
D-1118	2½	[illegible]	[illegible]	[illegible]	[illegible]	[illegible]	1	1½Y	2 x 18	[illegible]
D-1524	3	[illegible]	[illegible]	[illegible]	[illegible]	[illegible]	1½	2Y	2¼ x 24	[illegible]
D-1536	3	[illegible]	[illegible]	[illegible]	[illegible]	[illegible]	1½	2Y	2¼ x 36	[illegible]
D-2218	4	[illegible]	[illegible]	[illegible]	[illegible]	[illegible]	2	3Y	3¼ x 18	[illegible]
D-2236	4	[illegible]	[illegible]	[illegible]	[illegible]	[illegible]	2	3Y	3¼ x 36	[illegible]
102-WM	2½	15	25	10	4	3	1	2½Y	2 x 18	224
103-WM	2½	120	[illegible]	80	16	5	1	2½Y	2 x 18	[illegible]
104-WM	2½	[illegible]	[illegible]	80	34	8	1	2½Y	2 x 18	[illegible]
152-WM	3	[illegible]	[illegible]	[illegible]	20	4	1½	3Y	2¼ x 24	[illegible]
153-WM	3	280	[illegible]	280	280	8	1½	3Y	2¼ x 24	[illegible]
154-WM	3	[illegible]	[illegible]	[illegible]	280	12	1½	3Y	2¼ x 24	[illegible]
202-WM	4	280	[illegible]	[illegible]	280	20	2	4F	3¼ x 36	[illegible]
203-WM	4	280	[illegible]	280	280	20	2	4F	3¼ x 36	[illegible]
204-WM	4	280	[illegible]	[illegible]	280	20	2	4F	3¼ x 36	[illegible]
22236-VIB	5	[illegible]	[illegible]	[illegible]	[illegible]		2	2Y	3¼ x 36	[illegible]
202-BW-VIB	5	[illegible]	[illegible]	[illegible]	[illegible]		2	2½F	3¼ x 36	[illegible]
203-BW-VIB	5	[illegible]	[illegible]	[illegible]	[illegible]		2	2½F	3¼ x 36	[illegible]
204-BW-VIB	5	[illegible]	[illegible]	[illegible]	[illegible]		2	2½F	3¼ x 36	[illegible]
205-BW-VIB	5	[illegible]	[illegible]	[illegible]	[illegible]		2	4F	3¼ x 36	[illegible]
206-BW-VIB	5	[illegible]	[illegible]	[illegible]	[illegible]		2	4F	3¼ x 36	[illegible]
202-MX	4	280	[illegible]	[illegible]	280	20	2	4	3¼ x 36	[illegible]
203-MX	4	[illegible]	[illegible]	280	280	280	2	4	3¼ x 36	[illegible]
204-MX	4	280	[illegible]	[illegible]	280	280	2	4	3¼ x 36	[illegible]
205-MX	4	[illegible]	[illegible]	[illegible]	[illegible]	86	2	4	3¼ x 36	[illegible]
206-MX	4	[illegible]	[illegible]	[illegible]	[illegible]	[illegible]	2	4	3¼ x 36	[illegible]
206-MX	4	280	[illegible]	[illegible]	[illegible]	[illegible]	2	6	3¼ x 36	[illegible]
208-MX	4	280	[illegible]	[illegible]	[illegible]	[illegible]	2	6	3¼ x 36	[illegible]
210-MX	4	[illegible]	[illegible]	[illegible]	[illegible]	[illegible]	2	6	3¼ x 36	[illegible]
212-MX	4	[illegible]	[illegible]	[illegible]	[illegible]	374	2	8	3¼ x 36	[illegible]
214-MX	4	280	[illegible]	[illegible]	280	[illegible]	2	8	3¼ x 36	[illegible]
216-MX	4	570	[illegible]	280	284	798	2	8	3¼ x 36	[illegible]
3506-MX	6	—	—	—	—	—	3	8	5¼ x 36	[illegible]
3507-MX	6	—	—	—	—	—	3	8	5¼ x 36	[illegible]
3508-MX	6	—	—	—	—	—	3	8	5¼ x 36	[illegible]
3509-MX	6	—	—	—	—	—	3	8	5¼ x 36	[illegible]
3510-MX	6	—	—	—	—	—	3	8	5¼ x 36	[illegible]
3511-MX	6	—	—	—	—	—	3	10	5¼ x 36	[illegible]
3512-MX	6	—	—	—	—	—	3	10	5¼ x 36	[illegible]
3513-MX	6	—	—	—	—	—	3	10	5¼ x 36	[illegible]
3514-MX	6	[illegible]	[illegible]	[illegible]	[illegible]	—	3	10	5¼ x 36	[illegible]

1 Capacity of Duo unit normally figured same as single, allowing one for spare; however, duo will easily handle 50% more on intermittent service.
2 Available in BT (Strate-Thru) models only.
3 Flow rates are maximum for clean liquid and should be reduced corresponding to contaminant loading.
4 Finer mesh wire and fabric screens available. Write for flow rates on application.
5 On Duo Filters these dimensions pertain to piping connection on 3-way valves.

DOVER CORPORATION / RONNINGEN-PETTER DIVISION
1813 S. Burdick St., Kalamazoo, Mich. 49001 / (616) 381-9800

RICHARD (DICK) E. JONES
RONNINGEN - PETTER COMPANY
1616 ELIZABETH
RUSTON, LOUISIANA 71270
318-255-5156

Application Data

In addition to the Multiplex models covered in this bulletin, Ronningen-Petter also manufactures a broad line of single and duo filters (see Section 11-11) plus non-standard models and modifications for a great many specialized applications. Because of the many factors that influence the proper selection of filters and strainers, Ronningen-Petter welcomes all inquiries on filtration problems and will gladly assist you in making the best possible choice of equipment. Our sales engineers and representatives are located in principal industrial areas throughout the world.

Standard Constructions

This table shows the standard materials used for all components in contact with the liquid and tells which sizes are available in each construction. When operating conditions exceed normal limits, consult factory for availability of special constructions. Table shows 3-way ball valves, which are used on the inlet-blow-off connections of all filters except aluminum, where two aluminum ball valves are used instead. Outlet valves are 2-inch ball valves on all models except bronze, where 2-inch gate valves are used instead.

CONSTRUCTION	AVAILABLE IN THESE BODY SIZES	COMPONENTS: FILTER OUTLET	BODY ASSEMBLY	3-WAY VALVE HOUSING AND BALL	OUTLET VALVES	FILTER MEDIA	GASKET MATERIALS	MAX. CONDITIONS: DIFF. PSI	LINE PSI	TEMP. °F	FLOW RATES
BRONZE	2½", 3", 4", 5", and 6"	Bronze	Bronze and Copper	Bronze with Teflon® Seals	See remarks above	See Table Below	Natural Rubber, Neoprene, Thiokol, Buna N, Hypalon, Butyl, Silicone, Viton, or Teflon®	150	150	180	See Table Below
316 STAINLESS	2½", 4", 5", and 6"	Stainless	Stainless	Stainless with Teflon® Seals				150	150	180	
STEEL	2½", and 4"	Hi-Tensile Iron	Hi-tensile Iron and Steel	Steel with Teflon® Seals				150	150	180a	
ALUMINUM	2½", and 4"	Aluminum	Aluminum	See remarks above				150r	150r	180r	

®E. DuPont Co.

Filter Media

All of the wire, slotted, and fabric meshes listed in the table below are stock items; however innumerable variations are available on request for handling specialized applications. Perforated backing on all models is one-piece stainless steel construction.

FILTER MEDIA	WIRE MESH (Stainless or Monel)													FABRIC								SLOTTED (Stainless)				PERFORATED (Stainless)		
MESH or MESH EQUIVALENT*	10m	20m	30m	40m	60m	80m	100m	150m	200m	250m	400m	700m	60m	150m	250m	500m	1G Max	5 Max.	1 Max.	40μm Equiv.	50μm Equiv.	100μm Equiv.	175μm Equiv.	200μm Equiv.	10m Equiv.	20m Equiv.	30m Equiv.
PARTICLE RETENTION	.065"	.035"	.023"	.015"	.009"	.007"	.0059"	.0040"	.0033"	.0024"	.0018"	.0012"	.009"	.0040"	.0024"	.0016"	.0004"	.0002"	.00004"	.015"	.009"	.006"	.004"	.003"	.065"	.045"	.029"
MICRON EQUIVALENT	1625	875	575	375	225	175	137	115	82	60	45	30	225	115	60	40	10	5	1	375	225	150	100	75	1575	1125	600

Selection Table

Table lists standard Multiplex and Wall-mounted models but excludes Vibrating filters, described in Bulletin 6-11. Flow rates are based on clean liquids and should be reduced according to contaminant loading. They are also based on one idle element, which means the rates shown are those obtained during the backwash cycle. Inlet and outlet headers listed as 2½" or 3" have threaded connections. Size 4" and larger are equipped with 150-lb. Vanstone flanges. Blow-off headers are 4" steel ASA; and backwash supply headers (on external units) are fitted with 3" stainless steel Vanstone flanges.

CONSTRUCTION TYPE	MODEL	BODY SIZE IN.	CAPACITIES - GPM (Green numbers for clean well water; black numbers for viscous liquids.) WIRE SCREEN 20/60m		100m		150/200m or part		250m or part		400/700m		HEADER SIZES (IN.)	NO. OF FILTERS	DIMENSIONS OF SINGLE FILTER ELEMENT (IN.)	TOTAL FILTER AREA (SQ. IN.)
			60/150m		50m		FABRICS 500/700m		10 Micron		Under 10					
WALL-MOUNTED MULTIPLEX (With manual operation and internal backing only)	102-WM	2½	45	15	40	13	30	10	20	8	9	3	2½	2	2 x 18	224
	103-WM	2½	90	30	80	25	60	20	40	16	18	6	2½	3	2 x 18	336
	104-WM	2½	135	45	120	39	90	30	60	24	27	9	2½	4	2 x 18	448
	152-WM	3	75	25	60	20	45	15	32	10	12	4	3	2	2¼ x 24	336
	153-WM	3	150	50	120	40	90	30	64	20	24	8	3	3	2¼ x 24	504
	154-WM	3	225	75	180	60	135	45	96	30	36	12	3	4	2¼ x 24	672
	202-WM	4	150	60	125	50	90	35	70	20	30	10	4	2	3¼ x 36	728
	203-WM	4	275	120	250	100	180	70	140	40	60	20	4	3	3¼ x 36	1092
	204-WM	4	400	180	375	150	270	105	210	60	90	30	4	4	3¼ x 36	1456
STANDARD MULTIPLEX (With manual or automatic operation and internal or external backwashing)	202-MX	4	150	60	125	50	90	35	70	20	30	10	4	2	3¼ x 36	728
	203-MX	4	300	120	250	100	180	70	140	40	60	20	4	3	3¼ x 36	1092
	204-MX	4	400	180	375	150	270	105	210	60	80	30	4	4	3¼ x 36	1456
	205-MX	4	500	220	450	190	360	127	280	72	100	36	4	5	3¼ x 36	1820
	206-MX	4	600	260	500	240	450	149	350	84	120	42	4	6	3¼ x 36	2184
	208-MX	4	600	260	500	240	450	149	350	84	120	42	6	6	3¼ x 36	2184
	210-MX	4	800	350	800	320	540	193	420	108	160	54	6	8	3¼ x 36	2912
	212-MX	4	1000	440	1000	400	720	237	560	132	200	62	6	10	3¼ x 36	3640
	214-MX	4	1200	520	1200	480	810	281	630	176	240	74	8	12	3¼ x 36	4368
	216-MX	4	1400	620	1400	550	990	325	770	220	280	86	8	14	3¼ x 36	5096
	3506-MX	6	1600	710	1600	620	1170	380	910	224	320	98	8	16	3¼ x 36	5824
	3507-MX	6	1200	—	1200	—	800	—	600	—	—	—	8	6	5¼ x 36	3584
	3508-MX	6	1500	—	1400	—	950	—	700	—	—	—	8	7	5¼ x 36	4158
	3509-MX	6	1700	—	1600	—	1100	—	800	—	—	—	8	8	5¼ x 36	4732
	3510-MX	6	1900	—	1800	—	1250	—	900	—	—	—	8	9	5¼ x 36	5146
	3511-MX	6	2100	—	2000	—	1400	—	1000	—	—	—	8	10	5¼ x 36	5940
	3512-MX	6	2400	—	2250	—	1550	—	1100	—	—	—	10	11	5¼ x 36	6534
	3513-MX	6	2650	—	2500	—	1700	—	1200	—	—	—	10	12	5¼ x 36	7128
	3514-MX	6	2900	—	2750	—	1850	—	1350	—	—	—	10	13	5¼ x 36	7722
		6	3200	—	3000	—	2000	—	1500	—	—	—	10	14	5¼ x 36	8316

RONNINGEN-PETTER

DOVER CORPORATION RONNINGEN-PETTER DIVISION

1813 SOUTH BURDICK STREET • KALAMAZOO, MICHIGAN 49001 • PHONE (616) [illegible]

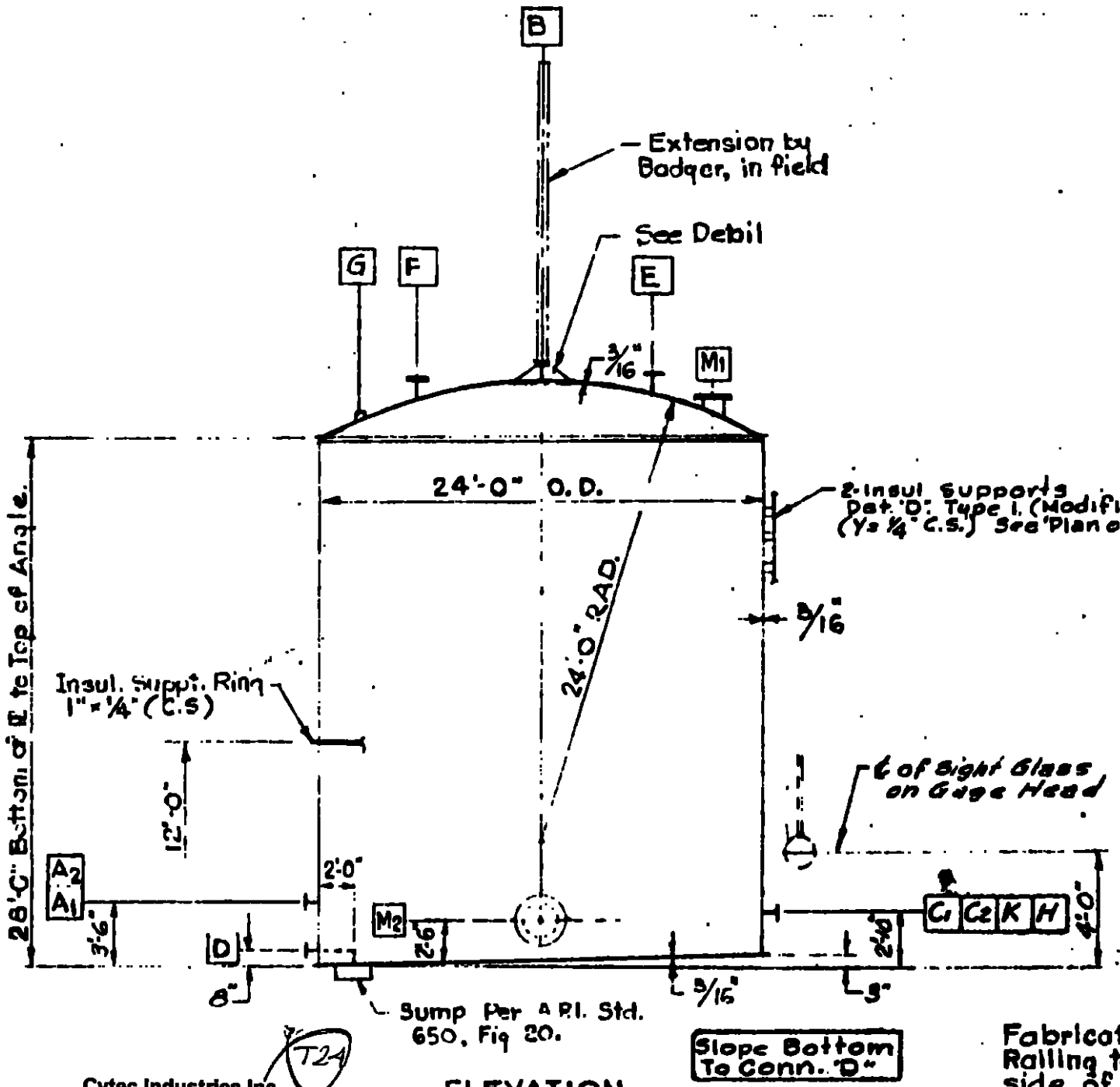

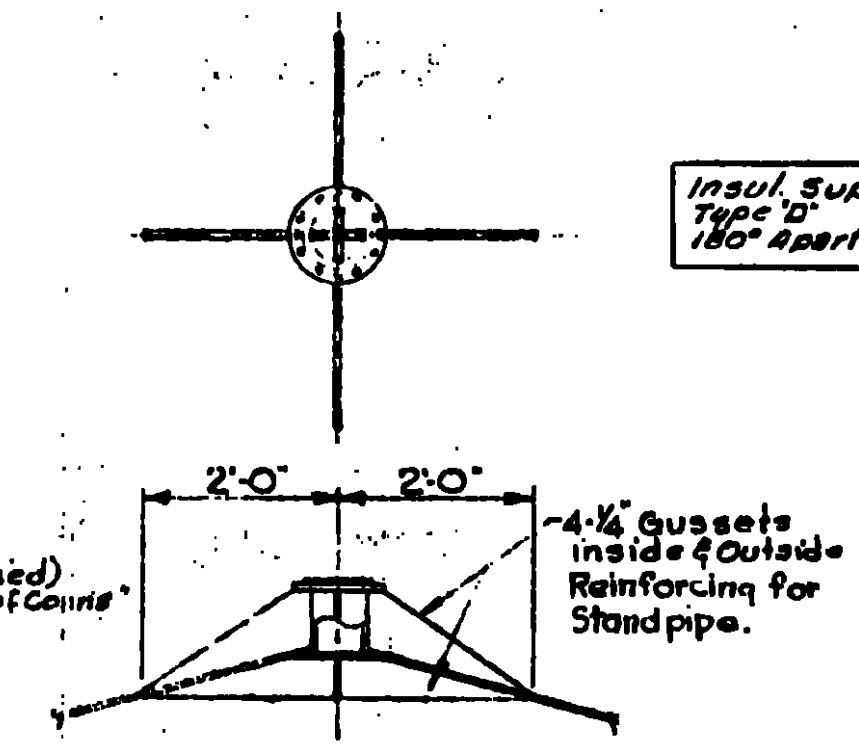

DETAIL-CONN. "B"

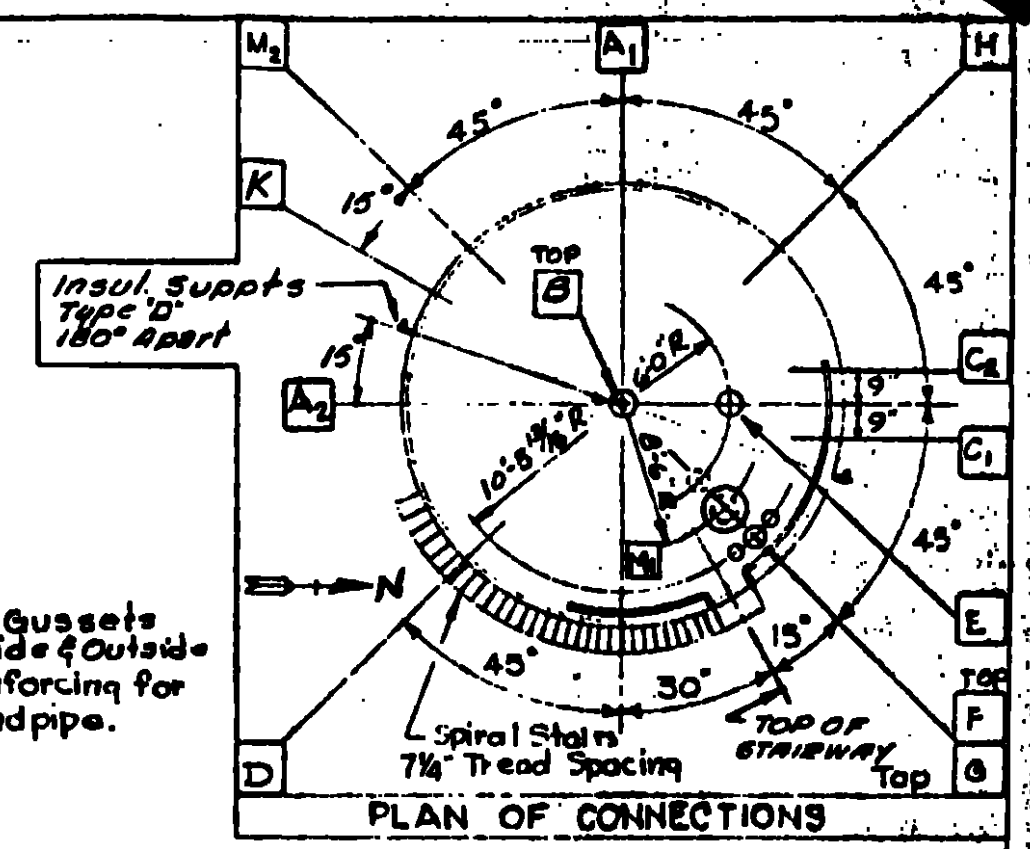

PLAN OF CONNECTIONS

IN 6313 AN PLANT CODE MS-307

Cytec Industries Inc.
Fortier Plant
EPA I.D. No. LAD 008175390

■ Fabr. to Furnish Complete Varec Ground Reading Tank Gage Fig. No. 2300, Model B. (All parts inside Tank to be 316 St St'l) (316L where welded)

Fabricator to provide Spiral Stairway & railing on tank roof. Railing to be 3'-6" high, and to span all nozzles, each side of ladder. Mfr. std. w/ Hot dipped galv. treads.

▲ With Explosion Vent (Equal to Varec 222P)

* Projections are from ℄ of tank to face of flange.

● Complete with Varec Fig #42 Cover. Mat'l: Aluminum

V	1/4/66		Added Spiral Stairs, Tread Spacing		
IV	1/4/65	W.S.	Revised Plan of Conns. Added size of conn. "E". Gaskets for "M1" & M2 and Note for "M1"		
III	1/4/65		Revised shell, heads & bottom design. Deleted detail Fig. 8B. Conn. "A". Revised location of conns. B & A1. Added insul. supports.		
II	1/14/64		Added slope to tank bottom. Varied dimensions of conns. Conn. D not 3". Rev. elevation.		
I	7/24/63	W.S.	Issued for Purchase of Material		
ISSUE	DATE	BY	DESCRIPTION OF ISSUE	CHKD	APPD

MATERIAL NOTES

SHELL	ASTM-A240 Type 316L
HEADS	ASTM-A240 Type 316L
SUPPORTS	
NOZZLE NECKS	ASTM-A312 Type 316L
NOZZLE FLGS	ASTM-A182L Gr I or II
COUPLINGS	
MH NECKS	ASTM-A240 Type 316L
MH FLGS	ASTM-A240 Type 316L
MH COVERS	ASTM-A240 Type 316L
EXT BOLTING	ASTM-A193 Gr B7 with A194 Gr 2H Nuts
GASKETS	J.M. #60 or equal.

GENERAL NOTES

1. HEADS TO BE: Top: Domed Bottom: Flat
2. NOZZLE BOLT HOLES TO STRADDLE NATURAL ℄ OF VESSEL UNLESS NOTED ON DWG
3. CONNS TO BE PROTECTED FOR SHIPMENT WITH COVER PLATES OR PIPE PLUGS
4. NOZZLES SHALL BE REINFORCED FOR TEST PRESS OR CORRODED THICKNESS.

DESIGN DATA

OPERATING PRESS: 0 PSIG. OPERATING TEMP: 200°F
DESIGN PRESS: Full of liquid S.G.=1.08 DESIGN TEMP: 250°F
CORROSION ALLOWANCE: None
JOINT EFFICIENCY:
STRESS RELIEVING:
RADIOGRAPHING:
MAX ALLOW WORKING PRESS (NEW & COLD): LIMITED BY:
ALLOW STRESS AT DESIGN TEMP:
HYDROSTATIC TEST PRESS: Per Code
CONSTRUCTION: PER API STD. 650
CODE STAMPING: None
INSPECTION: By Badger Co. and/or Client
PAINTING: None
INSULATION: 1½" Block by others
ERECTION WT:
OPERATING WT:
MAX LOAD ON FOUNDATION:

K	1	1/2	150#	F.F.	T.T.	105	105
H	1	4	150#	F.F.	Pump Rec.	120	120
M2	1	24	API 650		Shell Manhole	141	141 Use full face gsk't.
M1	1	24	API 650		Roof Manhole ▲	141	141 Use full face gsk't.
G	1	1½	Long Coup.		Level Gage	—	— See Note ●
F	1	4	150#	F.F.	Gage Hatch	120	120 See Note ●
E	1	2			Press Vac. Relief	120	120
D	1	4			Drain	120	120 Half 3H Cpg
C2	1	6			Liquid Outlet	134	134 Blank "C1"
B	1	6			Vapor Out	134	134
A1	2	6			Pump Rec.	134	134

Insul. Suppts. Badger Std. A-1-H

WASTE WATER COLUMN BOTTOMS TANK MP-307
AMERICAN CYANAMID
IN 6313
FORTIER AVONDALE, LA.

THE BADGER COMPANY, Inc.
CAMBRIDGE, MASS.

SCALE: 1/8" = 1'-0"
DATE: 1-14-66

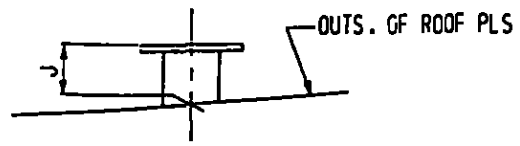

PROJ. OF ROOF FITTINGS

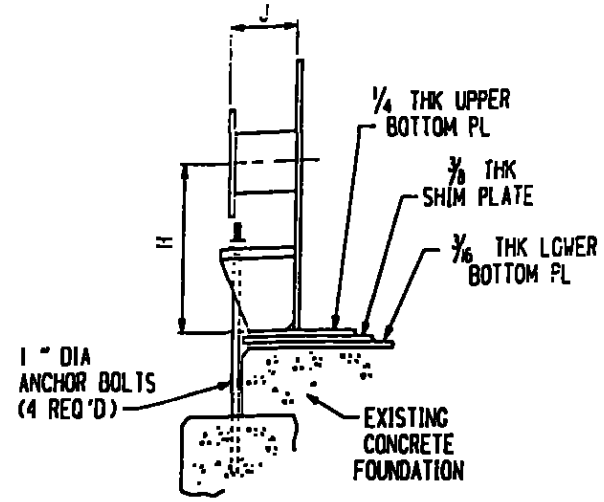

ELEV. & PROJ. OF FITTINGS

APPURTENANCES FURNISHED & INSTALLED BY CBI

CUST MARK	NO. REQ'D	CE MARK	CBI DRAWING	ELEVATION H	PROJECTION J	DESCRIPTION	
A	1	9-A	9	---	0'-6	4 DIA #150 RFSO ROOF NOZ	(VENT SCRUBBER WATER OUTLET)
B	1	10-A	10	---	0'-6	3 DIA #150 RFSO ROOF NOZZLE	(SPARE)
C	1	10-A	10	---	0'-6	3 DIA #150 RFSO ROOF NOZZLE	(LEVEL TRANSMITTER)
D	1	11-A	11	---	0'-6	2 DIA #150 RFSO ROOF NOZZLE	(SPARE)
E	1	12-A	12	0'-6	0'-7	3 DIA #150 RFSO SHELL NOZZLE	(SPARE)
F	1	12-B	12	0'-6	0'-7	4 DIA #150 RFSO SHELL NOZZLE	(DRAIN)
G	1	12-A	12	0'-6	0'-7	3 DIA #150 RFSO SHELL NOZZLE	(EMERGENCY WATER INLET)
H	1	12-A	12	0'-6	0'-7	3 DIA #150 RFSO SHELL NOZZLE	(OUTLET)
J	1	14-A	14	---	0'-10	16 DIA #150 FFSO ROOF NOZZLE	(EMERGENCY VENT)
L	1	21-1	21	---	---	6 DIA 150# RFSO ROOF NOZZLE	(VENT SCRUBBER INLET)
M	1	22-1	22	---	0'-7	3 DIA 150# RFSO ROOF NOZZLE	(FILTER PSV DISCHARGE)
MH1	1	15-A	15	2'-0 3/4	0'-6	24 DIA API 650 SHELL MANHOLE	

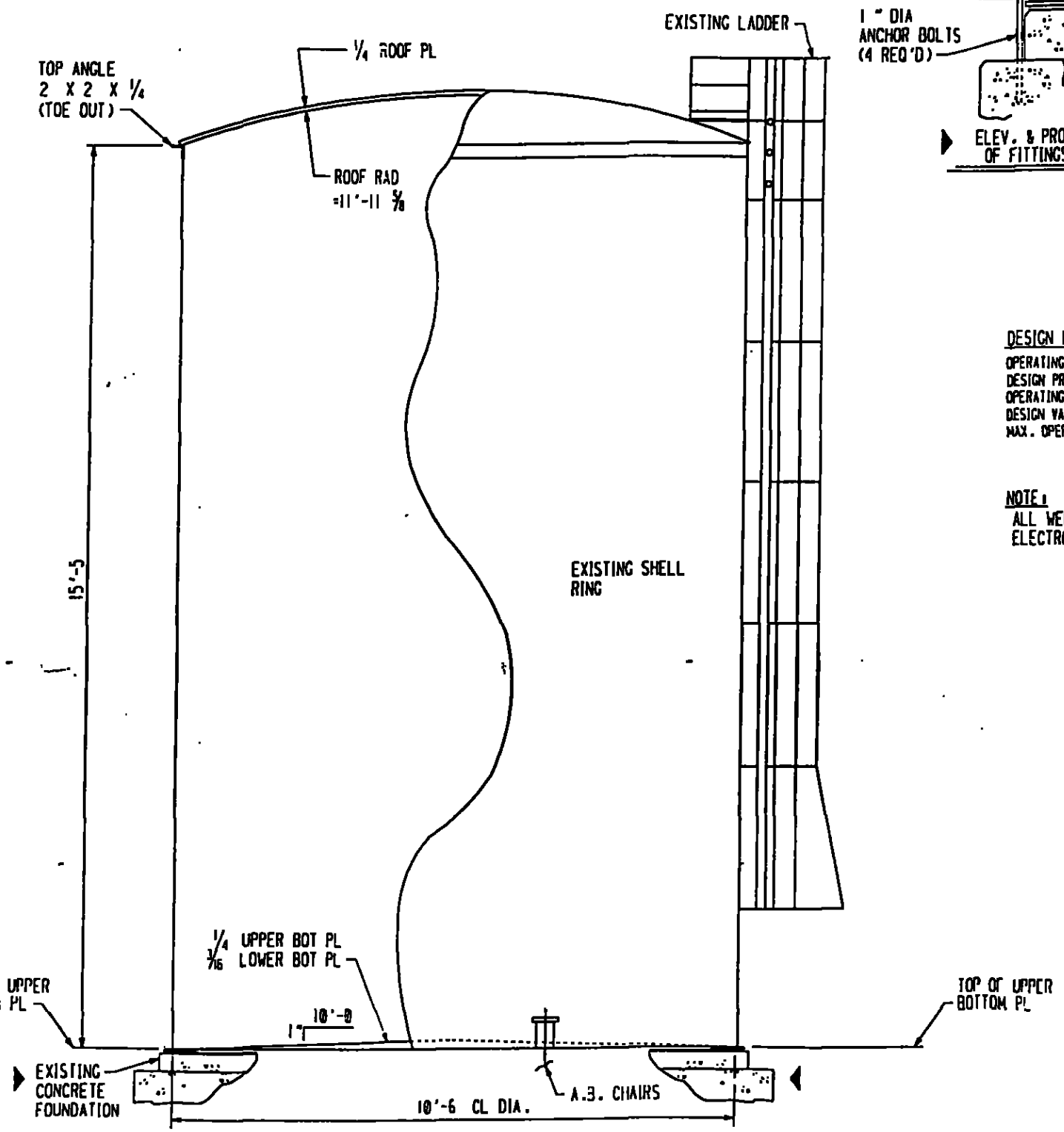

GENERAL ELEVATION

DESIGN NOTES

OPERATING PRESSURE —— ATMOS.
DESIGN PRESSURE —— .397 PSI
OPERATING VACUUM —— ATMOS.
DESIGN VACUUM —— .047 PSI
MAX. OPERATING TEMP. —— AMBIENT.

NOTE:
ALL WELDING TO BE DONE WITH E308L ELECTRODE UNLESS NOTED OTHERWISE.

FOUNDATION —— EXISTING CONCRETE SLAB
CONSTRUCTION – BY CBI NACON
SERVICE —— WWCB INJECTION (S.G. = 1.0)
CAPACITY —— 9986 GALLONS (NOMINAL)
SPECIFICATIONS— API 650 APP. S (NON-CERTIFIED DUE TO EXISTING SHELL)
DESIGN METAL TEMPERATURE— 30°F
DESIGN WIND VELOCITY —— 110 MPH PER API 650
ROOF LOAD —— 25.0 PSF
SEISMIC —— NONE
MATERIAL SPEC — PLATES —— A240 304L (ROOF & BOTTOM)

CORROSION ALLOWANCE —NONE
INSPECTION - MILL - CTR
SHOP - CBI
FIELD - CBI & CUSTOMER

SURFACE
PREPARATION —— NONE
PAINTING —— NONE
WELD EXAM. —— PER API 650, API 653

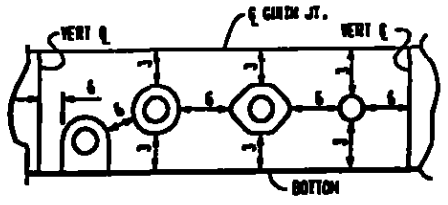

FITTINGS— TO BE LOCATED AS SHOWN ON ORIENTATION DRAWING(S). IF FITTING LOCATIONS ARE NOT GIVEN. LOCATE IN FIELD TO SUIT CUSTOMER MAINTAINING MINIMUM SPACING SHOWN IN SKETCH ABOVE. DIMENSIONS GIVEN ARE TOE-TO-TOE OF FILLET WELDS OR TOE-TO-CL OF BUTT WELDS. FLANGE BOLT HOLES TO STRADDLE VERTICAL CENTERLINE FOR SHELL NOZZLES. FLANGE BOLT HOLES TO STRADDLE 0° - 180° CENTERLINE FOR ROOF NOZZLES.

TEST —— DURING WATER TEST DO NOT FILL TANK ABOVE MAXIMUM HEIGHT OF 15'-7 OVER FILLING MAY CAUSE DAMAGE.

T26

Cytec Industries Inc.
Fortier Plant
EPA I.D. No. LAD 008175390

▶ INDICATES CHANGE FROM PREVIOUS ISSUE

REV	BY	CHKD	DATE	DESCRIPTION OF FITTINGS.
2	CHG	CSG	10-18-96	REVISE NOZZLE & SHOW FOUNDATION DET.
1	CHG	CSG	10-16-96	TOP ANGLE SIZE AND NOTES
0	CHG	CSG	10-12-96	ORIGINAL ISSUE

REVISIONS

REMARKS

CBI

SUPPLIER'S / PURCHASER'S NO

GENERAL ARANGEMENT
10'-6 DIA X 15'-5 HIGH O.R.T.
TANK TA-402
CYTEC INDUSTRIES, INC.
WESTWEGO, LA.

CUSTOMER'S NO
CONTRACT NO 962081
BY CHG CHKD CSG DATE 10-12-96
HOUSTON/G.B. MEYERS
ENGINEERING ASSIGNED
DWG 1
SHT
REV 3

THIS DRAWING HAS BEEN PREPARED FOR AND IS THE PROPERTY OF CBI AND IS TO BE USED ONLY IN CONNECTION WITH PERFORMANCE OF WORK BY CBI. REPRODUCTION IN WHOLE OR IN PART FOR ANY OTHER PURPOSE IS EXPRESSLY PROHIBITED.

62081001.DGN

PC	MARK	PC	DESCRIPTION	FT	IN		
1	3-A		BOTTOM ASSEMBLY				
	3-1	1	BAR 1 X 3/8 RUN	60	0	A276-304L	C
	4-1	2	PL SK X 3/16			A240-304L	B
			(72 X 20'-7 1/2 C2)				
	4-2	2	PL SK X 1/4			A240 304L	B
			(72 X 20'-7 1/2 C2)				
	5-1	2	PL SK X 3/8			A240-304L	B
			(72 X 6'-8 C2)				
	5 2	4	PL SK X 3/8			A240-304L	B
			(CW 5-1)				

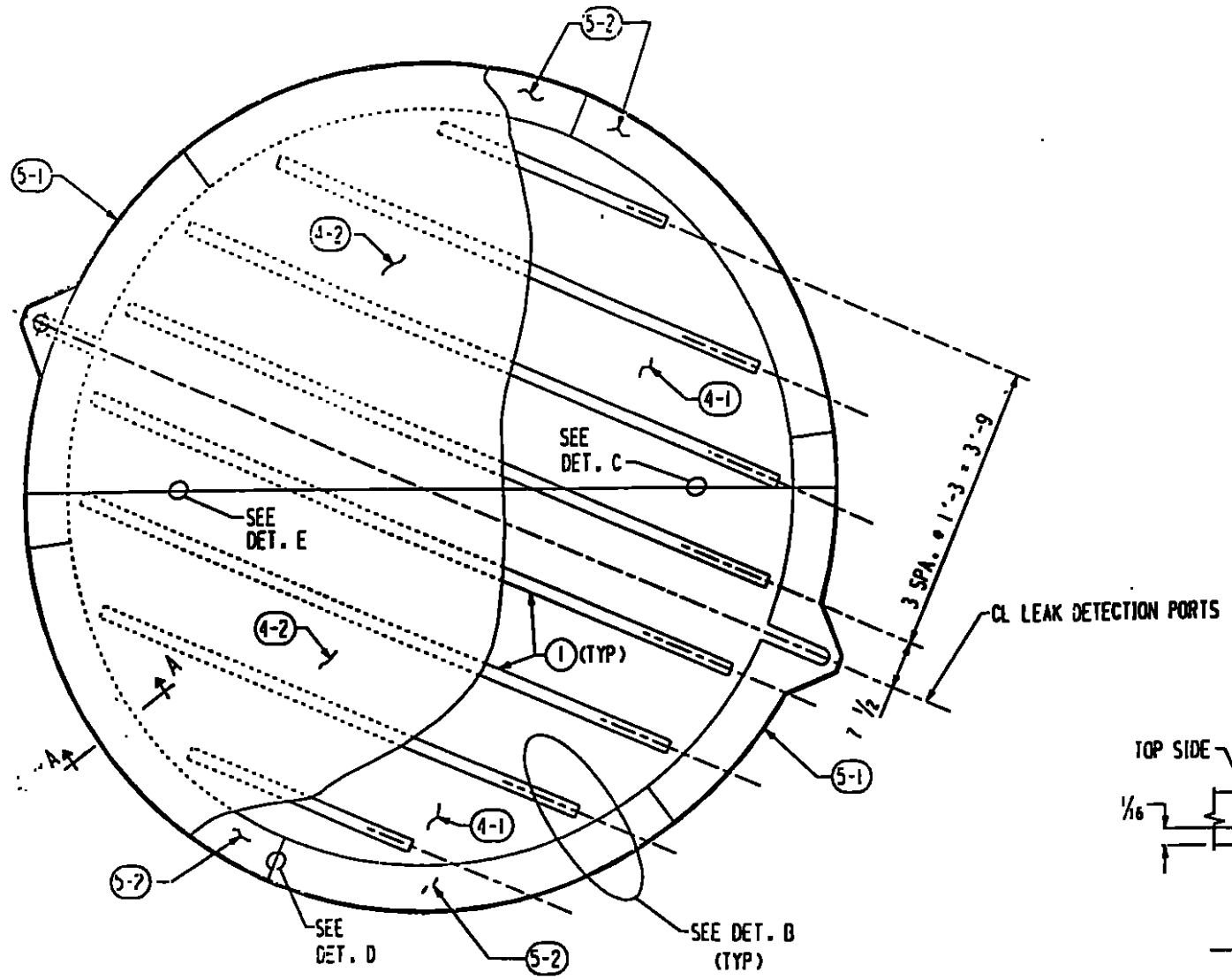

PLAN (A)

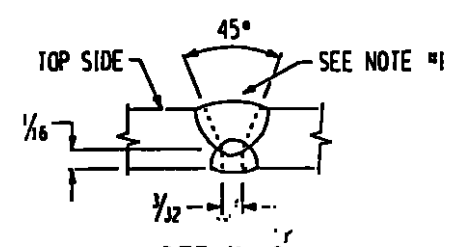

DETAIL C

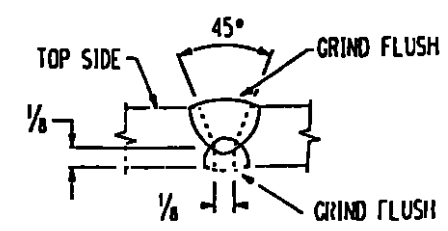

DETAIL D

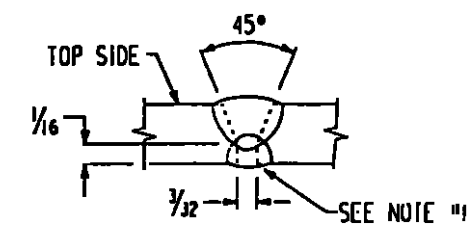

DETAIL E

T27

Cytec Industries Inc.
Fortier Plant
EPA I.D. No. LAD 008175390

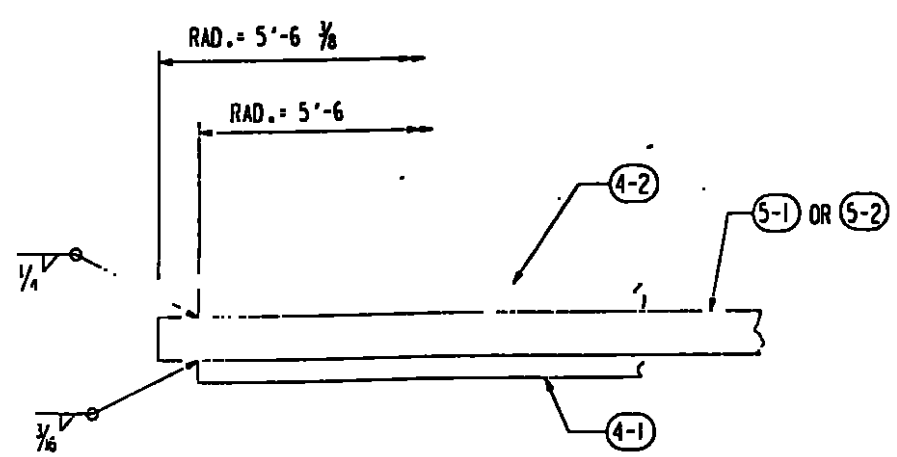

SECTION A-A

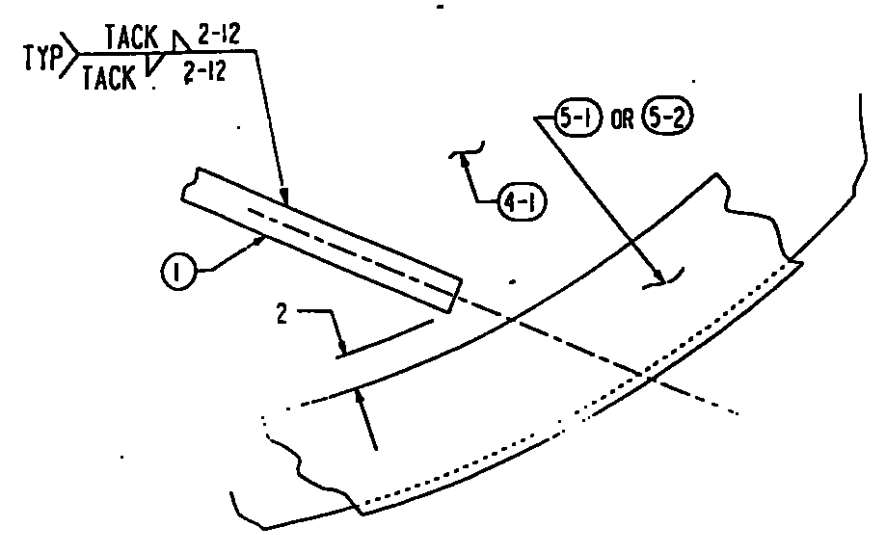

DETAIL B

NOTES:

1. GRIND WELD FLUSH IN AREA OF (5-1) AND (5-2).
2. SEE DWG. #2 FOR ORIENTATION.
3. WORK THIS DWG. W/ DWGS.-#4 & 5.

▶ INDICATES CHANGE FROM PREVIOUS ISSUE

CBI

BOTTOM ASSEMBLY
10'-6 DIA X 15'-5 HIGH D.R.T.
TANK TA-402
CYTEC INDUSTRIES, INC.
WESTWEGO, LA.

SUPPLIER'S / PURCHASER'S NO

CUSTOMER'S NO
BY CSG CHKD VWB DATE 10-18-96
HOUSTON / GB MYERS
ENGINEERING ASSIGNED

CONTRACT NO 962081
DWG 3 REV 0
SHT

REMARKS
REVISIONS

THIS DRAWING HAS BEEN PREPARED FOR AND IS THE PROPERTY OF CBI AND IS TO BE USED ONLY IN CONNECTION WITH PERFORMANCE OF WORK BY CBI. REPRODUCTION IN WHOLE OR IN PART FOR ANY OTHER PURPOSE IS EXPRESSLY FORBIDDEN.

APPENDIX NN

LAC 33:V.529
LAC 33:V.3105

Letter from LDEQ to American Cyanamid Company
Dated November 29, 1984

Louisiana Department of Environmental Quality

PATRICIA L. NORTON
SECRETARY

OFFICE OF SOLID AND HAZARDOUS WASTE

JOHN KOURY
ASSISTANT SECRETARY

November 29, 1984

American Cyanamid Company
Mr. J. L. Johnson
Environmental Group Leader
10800 River Road
Westwego, Louisiana 70094

Dear Mr. Johnson:

RE: Hazadous Waste Incinerator Numbers 1 & 2

We have reviewed your letter of May 1, 1984 and the associated attachments related to the above referenced incinerators.

Based on the information provided, we concur that the units are decontaminated. Since American Cyanamid advises that the incinerators are no longer in service and that there are no plans to place them in service in the future, the incinerators are no longer subject to the State's Hazardous Waste Regulation's permitting requirements.

Should American Cyanamid's plans be changed to reactivate the incinerators in the future, proper notification, as required by the applicable State's environmental regulation, must be provided by American Cyanamid.

Sincerely,

JOAN L. ALBRITTON
Permits Program Manager

JLA:DJD:tl

cc: Glenn Miller, Administrator
Tom Patterson, Enforcement Program Manager
Dave Olschewsky, Chief U.S. Environmental Protection Agency, Region VI

APPENDIX OO

LAC 33:V.536

Furmanite F.E.I.P
Component Inventory Detail

Site : 003360
Company : CYTEC
Plant : FORTIER PLANT
Contact : DREY TANNER
Telephone : 504-431-6247

Unit : 0002 HAZARDOUS WASTE
SubArea : BB RCRA BB

Tag number	Type	Size	Srvc	Freq	Acc	Pnts	Stat	Product	Stream	Location	Directives
0000006105	V	2.00	L	0030	ACC	1	A	2"-P-582-301G		PP-530A ACETO SRGE TK PMP DSCHG N. MS-505 GRD LVL	
0000006105-I	A	2.00	L	0030	ACC	1	A	2"-P-582-301G		PP-530A ACETO SRGE TK PMP DSCHG N. MS-505 GRD LVL	
0000006105-O	A	2.00	L	0030	ACC	1	A	2"-P-582-301G		PP-530A ACETO SRGE TK PMP DSCHG N. MS-505 GRD LVL	
0000006106	V	0.75	L	0030	ACC	1	A	2"-P-580-301G		PP-530A ACETO SRGE TK PMP DSCHG N. MS-505 GRD LVL	
0000006106-I	SC	0.75	L	0030	ACC	1	A	2"-P-580-301G		PP-530A ACETO SRGE TK PMP DSCHG N. MS-505 GRD LVL	
0000006106-O	SC	0.75	L	0030	ACC	1	A	2"-P-580-301G		PP-530A ACETO SRGE TK PMP DSCHG N. MS-505 GRD LVL	
0000006107	A	0.50	L	0030	ACC	1	A	2"-P-580-301G		PP-530A HAZ WASTE PMP BY MS-505 ACETO SRG TK GR FL	
0000006108	P	0.00	L	0030	ACC	1	A	3"-P-579-301G		PP-530A HAZ WASTE PMP BY MS-505 ACETO SRG TK GR FL	
0000006109	V	0.75	L	0030	ACC	1	A	3"-P-579-301G		PP-530A ACETO SRGE PMP SUCT N. MS-505 TK GRD LVL	
0000006109-I	SC	0.75	L	0030	ACC	1	A	3"-P-579-301G		PP-530A ACETO SRGE PMP SUCT N. MS-505 TK GRD LVL	
0000006109-O	POE	0.75	L	0030	ACC	1	A	3"-P-579-301G		PP-530A ACETO SRGE PMP SUCT N. MS-505 TK GRD LVL	
0000006110	V	3.00	L	0030	ACC	1	A	3"-P-579-301G		PP-530A ACETO SRGE PMP SUCT N. MS-505 TK GRD LVL	
0000006110-I	A	3.00	L	0030	ACC	1	A	3"-P-579-301G		PP-530A ACETO SRGE PMP SUCT N. MS-505 TK GRD LVL	
0000006110-O	A	3.00	L	0030	ACC	1	A	3"-P-579-301G		PP-530A ACETO SRGE PMP SUCT N. MS-505 TK GRD LVL	
0000006111	V	3.00	L	0030	ACC	1	A	3"-P-579-301G		PP-530A ACETO SRGE MPMP SUCT N. MS-505 TK GRD LVL	
0000006111-I	A	3.00	L	0030	ACC	1	A	3"-P-579-301G		PP-530A ACETO SRGE MPMP SUCT N. MS-505 TK GRD LVL	
0000006111-O	A	3.00	L	0030	ACC	1	A	2"-P-581-301G		PP-530A ACETO SRGE MPMP SUCT N. MS-505 TK GRD LVL	
0000006112	V	1.00	L	0030	ACC	1	A	2"-P-582-301G		PP730-A ACETO SURGE TANK PUMP DISCH N OF MS-505	
0000006112-I	SC	3.00	L	0030	ACC	1	A	2"-P-582-301G		PP-530B ACETO SRGE TK PMP SUCT N. MS-505 GRD LVL	
0000006112-O	POE	1.00	L	0030	ACC	1	A	3"-P-579-301G		PP-530B ACETO SRGE TK PMP SUCT N. MS-505 GRD LVL	
0000006113	V	0.75	L	0030	ACC	1	A	3"-P-579-301G		PP-530B ACETO SRGE TK PMP SUCT N. MS-505 GRD LVL	
0000006113-I	SC	0.75	L	0030	ACC	1	A	3"-P-579-301G		PP-530B ACETO SRGE TK PMP SUCT N. MS-505 GRD LVL	
0000006113-O	POE	0.75	L	0030	ACC	1	A	3"-P-579-301G		PP-530B ACETO SRGE TK PMP SUCT N. MS-505 GRD LVL	
0000006114	P	0.00	L	0030	ACC	1	A	2"-P-581-301G		PP-530B HAZ WASTE PMP BY MS-505 ACETO SRG TK GR FL	
0000006115	V	2.00	L	0030	ACC	1	A	2"-P-581-301G		PP-530B ACETO SRGE TK PMP DSC N. MS-505 GRD LVL	
0000006115-I	A	2.00	L	0030	ACC	1	A	2"-P-581-301G		PP-530B ACETO SRGE TK PMP DSC N. MS-505 GRD LVL	
0000006115-O	A	2.00	L	0030	ACC	1	A	2"-P-581-301G		PP-530B ACETO SRGE TK PMP DSC N. MS-505 GRD LVL	
0000006116	V	0.75	L	0030	ACC	1	A	2"-P-581-301G		PP-530B ACETO SRGE TK PMP DSC N. MS-505 GRD LVL	
0000006116-I	SC	0.75	L	0030	ACC	1	A	2"-P-581-301G		PP-530B ACETO SRGE TK PMP DSC N. MS-505 GRD LVL	
0000006116-O	SC	0.75	L	0030	ACC	1	A	2"-P-581-301G		PP-530B ACETO SRGE TK PMP DSC N. MS-505 GRD LVL	
0000006117	A	0.75	L	0030	ACC	1	A	2"-P-581-301G		PP-530B ACETO SRGE TK PMP DSC N. MS-505 GRD LVL	
0000006118	V	2.00	L	0030	ACC	1	A	2"-P-581-301G		PP-530B ACETO SRGE TK PMP DSC N. MS-505 GRD LVL	
0000006118-I	A	2.00	L	0030	ACC	1	A	2"-P-581-301G		PP-530B ACETO SRGE TK PMP DSC N. MS-505 GRD LVL	
0000006118-O	A	2.00	L	0030	ACC	1	A	2"-P-581-301G		PP-530B ACETO SRGE TK PMP DSC N. MS-505 GRD LVL	
0000006119	V	2.00	L	0030	ACC	1	A	2"-P-582-301G		PP-530A ACETO SRGE TK PMP DSCHG N. MS-505 GRD LVL	

te : 003360
mpany : CYTEC
ant : FORTIER PLANT
ntact : CREY TANNER
Unit : 0002 HAZARDOUS WASTE
SubArea : 89 RCRA 88
lephone : 504-431-6267

g number	Type	Size	Srvc	Freq	Acc	Pnts	Stat	Product	Stream	Location	Directives
00006119-I	A	2.00	L	0030	ACC	1	A	2"-P-582-301G		PP-530A ACETO SRGE TK PMP DSCHG N. MS-505 GRD LVL	
00006119-O	A	2.00	L	0030	ACC	1	A	2"-P-582-301G		PP-530A ACETO SRGE TK PMP DSCHG N. MS-505 GRD LVL	
00006120	V	2.00	L	0030	ACC	1	A	2"-P-582-301G		PP-530A ACETO SRGE TK PMP DSCHG M/ MS-505 GRD LVL	
00006120-I	A	2.00	L	0030	ACC	1	A	2"-P-582-301G		PP-530A ACETO SRGE TK PMP DSCHG M/ MS-505 GRD LVL	
00006120-O	A	2.00	L	0030	ACC	1	A	2"-P-582-301G		PP-530A ACETO SRGE TK PMP DSCHG M/ MS-505 GRD LVL	
00006121	V	2.00	L	0030	ACC	1	A	2"-P-582-301G		PP-530A ACETO SRGE TK PMP DSCHG N. MS-505 GRD LVL	
00006121-I	A	2.00	L	0030	ACC	1	A	2"-P-582-301G		PP-530A ACETO SRGE TK PMP DSCHG N. MS-505 GRD LVL	
00006121-O	A	2.00	L	0030	ACC	1	A	2"-P-582-301G		PP-530A ACETO SRGE TK PMP DSCHG N. MS-505 GRD LVL	
00006122	V	2.00	L	0030	ACC	1	A	NO LINE #		PP-530A ACETO SRGE TK PMP DSCHG N. MS-505 GRD LVL	
00006122-I	A	2.00	L	0030	ACC	1	A	NO LINE #		PP-530A ACETO SRGE TK PMP DSCHG N. MS-505 GRD LVL	
00006122-O	A	2.00	L	0030	ACC	1	A	NO LINE #		PP-530A ACETO SRGE TK PMP DSCHG N. MS-505 GRD LVL	
00006123	V	2.00	L	0030	ACC	1	A	NO LINE #		PP-530A ACETO SRGE TK PMP DSCHG N. MS-505 GRD LVL	
00006123-I	A	2.00	L	0030	ACC	1	A	NO LINE #		PP-530A ACETO SRGE TK PMP DSCHG N. MS-505 GRD LVL	
00006123-O	A	2.00	L	0030	ACC	1	A	NO LINE #		PP-530A ACETO SRGE TK PMP DSCHG N. MS-505 GRD LVL	
00006124	V	2.00	L	0030	ACC	1	A	2"-P-584-301G		PP-530A ACETO SRGE TK PMP DSCHG N. MS-505 GRD LVL	
00006124-I	A	2.00	L	0030	ACC	1	A	2"-P-584-301G		PP-530A ACETO SRGE TK PMP DSCHG N. MS-505 GRD LVL	
00006124-O	A	2.00	L	0030	ACC	1	A	2"-P-584-301G		PP-530A ACETO SRGE TK PMP DSCHG N. MS-505 GRD LVL	
00006125	V	2.00	L	0030	ACC	1	A	2"-P-582-301G		PP-530A ACETO SRGE TK PMP DSCHG N. MS-505 GRD LVL	
00006125-I	A	2.00	L	0030	ACC	1	A	2"-P-582-301G		PP-530A ACETO SRGE TK PMP DSCHG N. MS-505 GRD LVL	
00006125-O	A	2.00	L	0030	ACC	1	A	2"-P-582-301G		PP-530A ACETO SRGE TK PMP DSCHG N. MS-505 GRD LVL	
00006126	CV	2.00	L	0030	ACC	1	A	2"-P-582-301G		PP-530A ACETO SRGE TK PMP DSHG N. MS-505 GRD LVL	
00006126-I	A	2.00	L	0030	ACC	1	A	2"-P-582-301G		PP-530A ACETO SRGE TK PMP DSHG N. MS-505 GRD LVL	
00006126-O	A	2.00	L	0030	ACC	1	A	2"-P-582-301G		PP-530A ACETO SRGE TK PMP DSHG N. MS-505 GRD LVL	
00006127	V	0.50	L	0030	ACC	1	A	2"-P-582-301G		PP-530A ACETO SRGE TK PMP DSCHG N. MS-505 GRD LVL	
00006127-I	SC	0.50	L	0030	ACC	1	A	2"-P-582-301G		PP-530A ACETO SRGE TK PMP DSCHG N. MS-505 GRD LVL	
00006127-O	POE	0.50	L	0030	ACC	1	A	2"-P-582-301G		PP-530A ACETO SRGE TK PMP DSCHG N. MS-505 GRD LVL	
00006128	V	0.50	L	0030	ACC	1	A	2"-P-582-301G		HAZ.-WASTE-ACETO-SURGE-TANK M-S-505	
00006128-1	SC	0.50	L	0030	ACC	1	A	2"-P-582-301G		HAZ.-WASTE-ACETO-SURGE-TANK M-S-505	
00006128-O	SC	0.50	L	0030	ACC	1	A	2"-P-582-301G		HAZ.-WASTE-ACETO-SURGE-TANK M-S-505	
00006129	SC	0.50	L	0030	ACC	1	A	2"-P-582-301G		PP-530A ACETO SRGE TK PMP DSCHG N. MS-505 GRD LVL	
00006130	V	2.00	L	0030	ACC	1	A	2"-P-582-301G		PP-530A ACETO SRGE TK PMP DSCHG N. MS-505 GRD LVL	
00006130-I	A	2.00	L	0030	ACC	1	A	2"-P-582-301G		PP-530A ACETO SRGE TK PMP DSCHG N. MS-505 GRD LVL	
00006130-O	A	2.00	L	0030	ACC	1	A	2"-P-582-301G		PP-530A ACETO SRGE TK PMP DSCHG N. MS-505 GRD LVL	
00006131	V	2.00	L	0030	ACC	1	A	2"-P-582-301G		PP-530A ACETO SRGE TK. PMP DISCH N. MS-505 GD. LVL	
00006131-I	A	2.00	L	0030	ACC	1	A	2"-P-582-301G		PP-530A ACETO SRGE TK PMP DSCHG N. MS-505 GRD LVL	

Furmanite F.E.I.P
Component Inventory Detail

Site : 003360
Company : CYTEC
Plant : FORTIER PLANT
Contact : OREY TANNER
Telephone : 504-431-6247

Unit : 0002 HAZARDOUS WASTE
SubArea : BB RCRA BB

Tag number	Type	Size	Svc	Freq	Acc	Pnts	St	Product	Stream	Location	Directives
0000006131-D	A	2.00	L	0030	ACC	1	A	2"-P-582-301G		PP-530A ACETO SRGE TK PMP DSCHG N. MS-505 GRD LVL	
0000006374	V	2.00	L	0030	ACC	1	A	2"-P-582-301G		PP-530A ACETO SRGE TK PMP DSCHG N. MS-505 GRD LVL	
0000006374-I	A	2.00	L	0030	ACC	1	A	2"-P-582-301G		PP-530A ACETO SRGE TK PMP DSCHG N. MS-505 GRD LVL	
0000006374-O	A	2.00	L	0030	ACC	1	A	2"-P-582-301G		PP-530A ACETO SRGE TK PMP DSCHG N. MS-505 GRD LVL	
0000006375	A	2.00	L	0030	ACC	1	A	2"-P-582-301G		PP-530A ACETO SRGE PMP DSCHG N. MS-505 TK GRD LVL	
0000006376	A	2.00	L	0030	ACC	1	A	3"-P-579-301G		HAZ.-WASTE-ACETO-SURGE-TANK M-S-505	
0000006377	A	3.00	L	0030	ACC	1	A	MS-505		HAZ.-WASTE-ACETO-SURGE-TANK M-S-505	
0000021143	SC	0.50	L	0030	ACC	1	A	NO LINE #		P/R BTWN CTRL RM & PURIF W. OF WW COL #1 GRD LVL	
0000021144	V	3.00	L	0030	ACC	1	A	NO LINE #		P/R BTWN CTRL RM & PURIF W. OF WW COL #1 GRD LVL	
0000021144-I	A	3.00	L	0030	ACC	1	A	NO LINE #		P/R BTWN CTRL RM & PURIF W. OF WW COL #1 GRD LVL	
0000021144-O	A	3.00	L	0030	ACC	1	A	NO LINE #		P/R BTWN CTRL RM & PURIF W. OF WW COL #1 GRD LVL	
0000021146	V	0.75	L	0030	ACC	1	A	NO LINE #		P/R BTWN CTRL ROOM & PURIF W. OF WW COL #1 GRD LVL	
0000021146-O	POE	0.75	L	0030	ACC	1	A	NO LINE #		P/R BTWN CTRL ROOM & PURIF W. OF WW COL #1 GRD LVL	
0000030248	V	0.75	L	0030	ACC	1	A			MS-505 ACETO SURGE TANK	
0000030249	SC	0.50	L	0030	ACC	1	A			MS-505 ACETO SURGE TANK	
0000030250	SC	0.50	L	0030	ACC	1	A			MS-505 ACETO SURGE TANK PT-2523	
0000030251	V	1.50	L	0030	ACC	1	A			MS-505 ACETO SURGE TANK SUCT. SIDE OF PUMP	
0000030251-I	A	1.50	L	0030	ACC	1	A			MS-505 ACETO SURGE TANK SUCT. SIDE OF PUMP	
0000030251-O	A	1.50	L	0030	ACC	1	A			MS-505 ACETO SURGE TANK SUCT. SIDE OF PUMP	
0000030252	V	2.00	L	0030	ACC	1	A			MS-505 ACETO SURGE TANK DISCHARGE SIDE OF PUMP	
0000030252-I	A	2.00	L	0030	ACC	1	A			MS-505 ACETO SURGE TANK DISCHARGE SIDE OF PUMP	
0000030252-O	A	2.00	L	0030	ACC	1	A			MS-505 ACETO SURGE TANK DISCHARGE SIDE OF PUMP	
0000030253	V	2.00	L	0030	ACC	1	A			MS-505 ACETO SURGE TANK DISCHARGE SIDE OF PUMP	
0000030253-I	A	2.00	L	0030	ACC	1	A			MS-505 ACETO SURGE TANK DISCHARGE SIDE OF PUMP	
0000030253-O	A	2.00	L	0030	ACC	1	A			MS-505 ACETO SURGE TANK DISCHARGE SIDE OF PUMP	
0000007249	A	1.50	L	0030	ACC	1	A	2"-P-581-301G		ACETO-SURGE-TK-ON-PUMP-SL7869	
0000007250	A	1.00	L	0030	ACC	1	A	2"-P-581-301G		ACETO-SURGE-TK-ON-PUMP-SL7869	
0000007252	A	1.50	L	0030	ACC	1	A	2"-P-580-301G		ACETO-SURGE-TK-ON-PUMP-SL7870	
0000007253	A	1.50	L	0030	ACC	1	A	2"-P-580-301G		ACETO-SURGE-TK-ON-PUMP-SL7870	
0000007254	SC	0.50	L	0030	ACC	1	A	NO LINE #		ACETO-SURGE-TK-ON-PUMP-SL7870	

Site : 003360
Company : CYTEC
Plant : FORTIER PLANT
Contact : OREY TANNER
Telephone : 504-431-6247

Unit : 0002 HAZARDOUS WASTE
SubArea : 99 RCRA BB

Tag number	Type	Size	Srvc	Freq	Acc	Pnts	Stat	Product	Stream	Location	Directives

Total source points	: 100
Total FLANGE	: 49
Total AGITATORS	: 0
Total COMPRESSORS	: 0
Total Control Valve (new type)	: 1
Total MANWAY	: 0
Total CONTROL VALVES	: 0
Total OTHER	: 0
Total PUMPS	: 2
Total POLYMERIZING PUMP	: 0
Total POTENTIAL OPEN END	: 5
Total PRESSURE RELIEF DEVICE	: 0
Total PRD CLOSED VENT	: 0
Total PRD WITH RUPTURE DISC	: 0
Total PRD RUPTURE DISC	: 0
Total SCREWED CONNECTORS	: 15
Total TANK TOP	: 0
Total VALVES	: 28
Total VENT ON TANKS	: 0

Total Components: 100

Subarea	number	Al	Type	Size	Servi	Acc	Location	Pandidnum	Product
BB	0000030248		V	0.75	L	ACC	MS-505 ACETO		
BB	0000030251		V	1.50	L	ACC	MS-505 ACETO		
BB	0000030251	I	A	1.50	L	ACC	MS-505 ACETO		
BB	0000030251	O	A	1.50	L	ACC	MS-505 ACETO		
BB	0000030252		V	2.00	L	ACC	MS-505 ACETO		
BB	0000030252	I	A	2.00	L	ACC	MS-505 ACETO		
BB	0000030252	O	A	2.00	L	ACC	MS-505 ACETO		
BB	0000030253		V	2.00	L	ACC	MS-505 ACETO		
BB	0000030253	I	A	2.00	L	ACC	MS-505 ACETO		
BB	0000030253	O	A	2.00	L	ACC	MS-505 ACETO		
BB	0000030247		V	1.00	G	UNSAF	MS-505 ACETO		
BB	0000030249		SC	0.50	L	ACC	MS-505 ACETO		
BB	0000030250		SC	0.50	L	ACC	MS-505 ACETO		
BB	0000030247	O	FOE	1.00	G	UNSAF	MS-505 ACETO		MS-505
BB	0000006106		V	0.75	L	ACC	PP-530A ACETO	10-0-121REV012	2"-P-580-301G
BB	0000006106	I	SC	0.75	L	ACC	PP-530A ACETO	10-0-121REV012	2"-P-580-301G
BB	0000006106	O	SC	0.75	L	ACC	PP-530A ACETO	10-0-121REV012	2"-P-580-301G
BB	0000006107		A	0.50	L	ACC	PP-530A HAZ	10-0-121REV012	2"-P-580-301G
BB	0000007252		A	1.50	L	ACC	ACETO-SURGE-TK-O	10-0-121REV012	2"-P-580-301G
BB	0000007253		A	1.50	L	ACC	ACETO-SURGE-TK-O	10-0-121REV012	2"-P-580-301G
BB	0000006111	O	A	3.00	L	ACC	PP-530A ACETO	10-0-121REV012	2"-P-581-301G
BB	0000006114		F	0.00	L	ACC	PP-530B HAZ	10-0-121REV012	2"-P-581-301G
BB	0000006115		V	2.00	L	ACC	PP-530B ACETO	10-0-121REV012	2"-P-581-301G
BB	0000006115	I	A	2.00	L	ACC	PP-530B ACETO	10-0-121REV012	2"-P-581-301G
BB	0000006115	O	A	2.00	L	ACC	PP-530B ACETO	10-0-121REV012	2"-P-581-301G
BB	0000006116		V	0.75	L	ACC	PP-530B ACETO	10-0-121REV012	2"-P-581-301G
BB	0000006116	I	SC	0.75	L	ACC	PP-530B ACETO	10-0-121REV012	2"-P-581-301G
BB	0000006116	O	SC	0.75	L	ACC	PP-530B ACETO	10-0-121REV012	2"-P-581-301G
BB	0000006117		A	0.75	L	ACC	PP-530B ACETO	10-0-121REV012	2"-P-581-301G
BB	0000006118		V	2.00	L	ACC	PP-530B ACETO	10-0-121REV012	2"-P-581-301G
BB	0000006118	I	A	2.00	L	ACC	PP-530B ACETO	10-0-121REV012	2"-P-581-301G
BB	0000006118	O	A	2.00	L	ACC	PP-530B ACETO	10-0-121REV012	2"-P-581-301G
BB	0000007249		A	1.50	L	ACC	ACETO-SURGE-TK-O	10-0-121REV012	2"-P-581-301G
BB	0000007250		A	1.00	L	ACC	ACETO-SURGE-TK-O	10-0-121REV012	2"-P-581-301G
BB	0000006105		V	2.00	L	ACC	PP-530A ACETO	10-0-121REV012	2"-P-582-301G
BB	0000006105	I	A	2.00	L	ACC	PP-530A ACETO	10-0-121REV012	2"-P-582-301G
BB	0000006105	O	A	2.00	L	ACC	PP-530A ACETO	10-0-121REV012	2"-P-582-301G
BB	0000006112		V	3.00	L	ACC	PP-530A ACETO	10-0-121REV012	2"-P-582-301G
BB	0000006112	I	SC	3.00	L	ACC	PP-530B ACETO	10-0-121REV012	2"-P-582-301G
BB	0000006119		V	2.00	L	ACC	PP-530A ACETO	10-0-121REV012	2"-P-582-301G
BB	0000006119	I	A	2.00	L	ACC	PP-530A ACETO	10-0-121REV012	2"-P-582-301G
BB	0000006119	O	A	2.00	L	ACC	PP-530A ACETO	10-0-121REV012	2"-P-582-301G
BB	0000006120		V	2.00	L	ACC	PP-530A ACETO	10-0-121REV012	2"-P-582-301G
BB	0000006120	I	A	2.00	L	ACC	PP-530A ACETO	10-0-121REV012	2"-P-582-301G

Subarea	Number	Al	Type	Size	Servi	Acc	Location	Pandidnum	Product
BB	0000006120	O	A	2.00	L	ACC	PP-530A ACETO	10-0-121REV012	2"-P-582-301G
BB	0000006121		V	2.00	L	ACC	PP-530A ACETO	10-0-121REV012	2"-P-582-301G
BB	0000006121	I	A	2.00	L	ACC	PP-530A ACETO	10-0-121REV012	2"-P-582-301G
BB	0000006121	O	A	2.00	L	ACC	PP-530A ACETO	10-0-121REV012	2"-P-582-301G
BB	0000006125		V	2.00	L	ACC	PP-530A ACETO	10-0-121REV012	2"-P-582-301G
BB	0000006125	I	A	2.00	L	ACC	PP-530A ACETO	10-0-121REV012	2"-P-582-301G
BB	0000006125	O	A	2.00	L	ACC	PP-530A ACETO	10-0-121REV012	2"-P-582-301G
BB	0000006126		CV	2.00	L	ACC	PP-530A ACETO	10-0-121REV012	2"-P-582-301G
BB	0000006126	I	A	2.00	L	ACC	PP-530A ACETO	10-0-121REV012	2"-P-582-301G
BB	0000006126	O	A	2.00	L	ACC	PP-530A ACETO	10-0-121REV012	2"-P-582-301G
BB	0000006127		V	0.50	L	ACC	PP-530A ACETO	10-0-121REV012	2"-P-582-301G
BB	0000006127	I	SC	0.50	L	ACC	PP-530A ACETO	10-0-121REV012	2"-P-582-301G
BB	0000006127	O	POE	0.50	L	ACC	PP-530A ACETO	10-0-121REV012	2"-P-582-301G
BB	0000006128		V	0.50	L	ACC	HAZ.-WASTE-ACETO	10-0-121REV012	2"-P-582-301G
BB	0000006128	I	SC	0.50	L	ACC	HAZ.-WASTE-ACETO	10-0-121REV012	2"-P-582-301G
BB	0000006128	O	SC	0.50	L	ACC	HAZ.-WASTE-ACETO	10-0-121REV012	2"-P-582-301G
BB	0000006129		SC	0.50	L	ACC	PP-530A ACETO	10-0-121REV012	2"-P-582-301G
BB	0000006130		V	2.00	L	ACC	PP-530A ACETO	10-0-121REV012	2"-P-582-301G
BB	0000006130	I	A	2.00	L	ACC	PP-530A ACETO	10-0-121REV012	2"-P-582-301G
BB	0000006130	O	A	2.00	L	ACC	PP-530A ACETO	10-0-121REV012	2"-P-582-301G
BB	0000006131		V	2.00	L	ACC	PP-530A ACETO	10-0-121REV012	2"-P-582-301G
BB	0000006131	I	A	2.00	L	ACC	PP-530A ACETO	10-0-121REV012	2"-P-582-301G
BB	0000006131	O	A	2.00	L	ACC	PP-530A ACETO	10-0-121REV012	2"-P-582-301G
BB	0000006374		V	2.00	L	ACC	PP-530A ACETO	10-0-121REV012	2"-P-582-301G
BB	0000006374	I	A	2.00	L	ACC	PP-530A ACETO	10-0-121REV012	2"-P-582-301G
BB	0000006374	O	A	2.00	L	ACC	PP-530A ACETO	10-0-121REV012	2"-P-582-301G
BB	0000006375		A	2.00	L	ACC	PP-530A ACETO	10-0-121REV012	2"-P-582-301G
BB	0000006637		V	2.00	L	DIFF	PP-530A ACETO	10-0-121REV012	2"-P-582-301G
BB	0000006637	I	A	2.00	L	DIFF	PP-530A ACETO	10-0-121REV012	2"-P-582-301G
BB	0000006637	O	A	2.00	L	DIFF	PP-530A ACETO	10-0-121REV012	2"-P-582-301G
BB	0000006124		V	2.00	L	ACC	PP-530A ACETO	10-0-121REV012	2"-P-584-301G
BB	0000006124	I	A	2.00	L	ACC	PP-530A ACETO	10-0-121REV012	2"-P-584-301G
BB	0000006124	O	A	2.00	L	ACC	PP-530A ACETO	10-0-121REV012	2"-P-584-301G
BB	0000006108		P	0.00	L	ACC	PP-530A HAZ	10-0-121REV012	3"-P-579-301G
BB	0000006109		V	0.75	L	ACC	PP-530A ACETO	10-0-121REV012	3"-P-579-301G
BB	0000006109	I	SC	0.75	L	ACC	PP-530A ACETO	10-0-121REV012	3"-P-579-301G
BB	0000006109	O	POE	0.75	L	ACC	PP-530A ACETO	10-0-121REV012	3"-P-579-301G
BB	0000006110		V	3.00	L	ACC	PP-530A ACETO	10-0-121REV012	3"-P-579-301G
BB	0000006110	I	A	3.00	L	ACC	PP-530A ACETO	10-0-121REV012	3"-P-579-301G
BB	0000006110	O	A	3.00	L	ACC	PP-530A ACETO	10-0-121REV012	3"-P-579-301G
BB	0000006111		V	3.00	L	ACC	PP-530A ACETO	10-0-121REV012	3"-P-579-301G
BB	0000006111	I	A	3.00	L	ACC	PP-530A ACETO	10-0-121REV012	3"-P-579-301G
BB	0000006112	O	POE	1.00	L	ACC	PP-530B ACETO	10-0-121REV012	3"-P-579-301G
BB	0000006113		V	0.75	L	ACC	PP-530B ACETO	10-0-121REV012	3"-P-579-301G

Subarea	Number	Al	Type	Size	Servi	Acc	Location	Pandidnum	Product
BB	0000006113	I	SC	0.75	L	ACC	PP-530B ACETO	10-0-121REV012	3"-P-579-301G
BB	0000006113	O	POE	0.75	L	ACC	PP-530B ACETO	10-0-121REV012	3"-P-579-301G
BB	0000006376		A	2.00	L	ACC	HAZ.-WASTE-ACETO	10-0-121REV012	2"-P-579-301G
BB	0000021147		V	0.75	L	DIFF	P/R BTWN CTRL	10-0-121REV012	3"-P-579-301G
BB	0000021147	O	POE	0.75	L	DIFF	P/R BTWN CTRL	10-0-121REV012	3"-P-579-301G
BB	0000006377		A	3.00	L	ACC	HAZ.-WASTE-ACETO	10-0-121REV012	MS-505
BB	0000006386		V	2.00	L	UNSAF	TOP OF MS-505	10-0-121REV012	MS-505
BB	0000006386	I	A	2.00	L	UNSAF	TOP OF MS-505	10-0-121REV012	MS-505
BB	0000006386	O	A	2.00	L	UNSAF	TOP OF MS-505	10-0-121REV012	MS-505
BB	0000006387		RCV	4.00	L	DIFF	TOP OF MS-505	10-0-121REV012	MS-505
BB	0000006387	I	A	4.00	L	UNSAF	TOP OF MS-505	10-0-121REV012	MS-505
BB	0000006387	O	A	4.00	L	UNSAF	TOP OF MS-505	10-0-121REV012	MS-505
BB	0000021145		V	3.00	L	UNSAF	P/R BTWN CTRL	10-0-121REV012	MS-505
BB	0000021145	I	A	3.00	L	UNSAF	P/R BTWN CTRL	10-0-121REV012	MS-505
BB	0000021145	O	A	3.00	L	UNSAF	P/R BTWN CTRL	10-0-121REV012	MS-505
BB	0000006122		V	2.00	L	ACC	PP-530A ACETO	10-0-121REV012	NO LINE #
BB	0000006122	I	A	2.00	L	ACC	PP-530A ACETO	10-0-121REV012	NO LINE #
BB	0000006122	O	A	2.00	L	ACC	PP-530A ACETO	10-0-121REV012	NO LINE #
BB	0000006123		V	2.00	L	ACC	PP-530A ACETO	10-0-121REV012	NO LINE #
BB	0000006123	I	A	2.00	L	ACC	PP-530A ACETO	10-0-121REV012	NO LINE #
BB	0000006123	O	A	2.00	L	ACC	PP-530A ACETO	10-0-121REV012	NO LINE #
BB	0000006380		A	2.00	L	DIFF	ACRYLO.-HAZ.	10-0-121REV012	NO LINE #
BB	0000006640		V	2.00	L	DIFF	P/R BTWN XMA AND	10-0-121REV012	NO LINE #
BB	0000006640	I	SC	2.00	L	DIFF	P/R BTWN XMA &	10-0-121REV012	NO LINE #
BB	0000006640	O	POE	2.00	L	DIFF	P/R BTWN XMA &	10-0-121REV012	NO LINE #
BB	0000021139		A	1.50	L	UNSAF	E. SIDE MS-505	10-0-121REV012	NO LINE #
BB	0000021140		A	2.00	L	DIFF	P/R BTWN MXA &	10-0-121REV012	NO LINE #
BB	0000021141		A	2.00	L	DIFF	P/R BTWN MXA &	10-0-121REV012	NO LINE #
BB	0000021142		A	0.75	L	DIFF	P/R BTWN HCN &	10-0-121REV012	NO LINE #
BB	0000021142	O	POE	0.75	L	DIFF	P/R BTWN HCN &	10-0-121REV012	NO LINE #
BB	0000021143		SC	0.50	L	ACC	P/R BTWN CTRL RM	10-0-121REV012	NO LINE #
BB	0000021144		V	3.00	L	ACC	P/R BTWN CTRL RM	10-0-121REV012	NO LINE #
BB	0000021144	I	A	3.00	L	ACC	P/R BTWN CTRL RM	10-0-121REV012	NO LINE #
BB	0000021144	O	A	3.00	L	ACC	P/R BTWN CTRL RM	10-0-121REV012	NO LINE #
BB	0000021146		V	0.75	L	ACC	P/R BTWN CTRL	10-0-121REV012	NO LINE #
BB	0000021146	O	POE	0.75	L	ACC	P/R BTWN CTRL	10-0-121REV012	NO LINE #
BB	0000007254		SC	0.50	L	ACC	ACETO-SURGE-TK-O	10-0-121REV012	NO LINE #

CYTEC INDUSTRIES
WESTWEGO PLANT
MONTHLY RCRA BB REPORTS
FEBRUARY 1998

Furmanite F.E.I.P
INSPECTION SUMMARY BY COMP.

MONTHLY RCRA BB REPORTS FOR FEBRUARY 1998

Inspections on or after 02/01/98 and on or before 02/28/98.

Site : 003360
Company : CYTEC
Plant : FORTIER PLANT
Contact : OREY TANNER
Telephone : 504-431-6247

Unit : 0002 HAZARDOUS WASTE
SubArea : BB RCRA BB

Component Type.....: FLANGE
Total Components.....: 49
Total Leaking Components.: 0
Total Inspections.....: 49
Repair Records Generated.: 0
Percent Leakers.....: 0.00

0 PPM	49
1 - 99 PPM	0
100 - 199 PPM	0
200 - 499 PPM	0
500 - 999 PPM	0
1,000 - 1,999 PPM	0
2,000 - 4,999 PPM	0
5,000 - 9,999 PPM	0
10,000 - 24,999 PPM	0
25,000 - 49,999 PPM	0
50,000 - 74,999 PPM	0
75,000 - 99,999 PPM	0
> 99,999 PPM	0

Component Type.....: Control Valve
Total Components.....: 1
Total Leaking Components.: 0
Total Inspections.....: 1
Repair Records Generated.: 0
Percent Leakers.....: 0.00

0 PPM	1
1 - 99 PPM	0
100 - 199 PPM	0
200 - 499 PPM	0
500 - 999 PPM	0
1,000 - 1,999 PPM	0
2,000 - 4,999 PPM	0
5,000 - 9,999 PPM	0
10,000 - 24,999 PPM	0
25,000 - 49,999 PPM	0
50,000 - 74,999 PPM	0
75,000 - 99,999 PPM	0
> 99,999 PPM	0

Component Type.....: PUMPS
Total Components.....: 2
Total Leaking Components.: 0
Total Inspections.....: 2
Repair Records Generated.: 0
Percent Leakers.....: 0.00

0 PPM	2
1 - 99 PPM	0
100 - 199 PPM	0
200 - 499 PPM	0
500 - 999 PPM	0
1,000 - 1,999 PPM	0
2,000 - 4,999 PPM	0
5,000 - 9,999 PPM	0
10,000 - 24,999 PPM	0
25,000 - 49,999 PPM	0
50,000 - 74,999 PPM	0
75,000 - 99,999 PPM	0
> 99,999 PPM	0

Component Type.....: POTENTIAL OPEN E
Total Components.....: 5
Total Leaking Components.: 0
Total Inspections.....: 5
Repair Records Generated.: 0
Percent Leakers.....: 0.00

0 PPM	5
1 - 99 PPM	0
100 - 199 PPM	0
200 - 499 PPM	0
500 - 999 PPM	0
1,000 - 1,999 PPM	0
2,000 - 4,999 PPM	0
5,000 - 9,999 PPM	0
10,000 - 24,999 PPM	0
25,000 - 49,999 PPM	0
50,000 - 74,999 PPM	0
75,000 - 99,999 PPM	0
> 99,999 PPM	0

Furmanite F.E.I.P
INSPECTION SUMMARY BY COMP.

MONTHLY RCRA BB REPORTS FOR FEBRUARY 1998

Inspections on or after 02/01/98 and on or before 02/28/98.

Site : 003360
Company : CYTEC
Plant : FORTIER PLANT
Contact : OREY TANNER
Telephone : 504-431-6247

Unit : 0002 HAZARDOUS WASTE
SubArea : BB RCRA BB

Component Type.....:	SCREWED CONNECTO	Component Type.....:	VALVES
Total Components.....:	15	Total Components.....:	28
Total Leaking Components.:	0	Total Leaking Components.:	1
Total Inspections.....:	15	Total Inspections.....:	28
Repair Records Generated.:	0	Repair Records Generated.:	1
Percent Leakers.....:	0.00	Percent Leakers.....:	3.57

0 PPM	15	0 PPM	27
1 - 99 PPM	0	1 - 99 PPM	0
100 - 199 PPM	0	100 - 199 PPM	0
200 - 499 PPM	0	200 - 499 PPM	0
500 - 999 PPM	0	500 - 999 PPM	0
1,000 - 1,999 PPM	0	1,000 - 1,999 PPM	1
2,000 - 4,999 PPM	0	2,000 - 4,999 PPM	0
5,000 - 9,999 PPM	0	5,000 - 9,999 PPM	0
10,000 - 24,999 PPM	0	10,000 - 24,999 PPM	0
25,000 - 49,999 PPM	0	25,000 - 49,999 PPM	0
50,000 - 74,999 PPM	0	50,000 - 74,999 PPM	0
75,000 - 99,999 PPM	0	75,000 - 99,999 PPM	0
> 99,999 PPM	0	> 99,999 PPM	0

Furmanite F.E.I.P
INSPECTION SUMMARY BY COMP.

MONTHLY RCRA BB REPORTS FOR FEBRUARY 1998

Inspections on or after 02/01/98 and on or before 02/28/98.

Site : 003360
Company : CYTEC
Plant : FORTIER PLANT

Site Totals

Total Components.....:	100
Total Leaking Components.:	1
Total Inspections.....:	100
Repair Records Generated.:	1
Percent Leakers.....:	1.00

Furmanite F.E.I.P
Daily Leak Report

MONTHLY RCRA BB REPORTS FOR FEBRUARY 1998

Inspections From 02/01/98 To 02/28/98

Site : 003360
Company : CYTEC
Plant : FORTIER PLANT
Contact : OREY TANNER
Telephone : 504-431-6247

Unit : 0002 HAZARDOUS WASTE
SubArea : BB RCRA BB

Tag	Typ	Size	Location	Inspects PPM	Inspect	First Attempt	Repair Required
0000006120	V	2.00	HAZ.-WASTE-ACETO-SURGE-TANK M-S-505	1000	02/19/98	Done	Completed

Inspector _____ Submitted to _____ Date _____

Furmanite F.E.I.P
Daily Leak Report

MONTHLY RCRA BB REPORTS FOR FEBRUARY 1998

Inspections From 02/01/98 To 02/28/98

Site : 003360
Company : CYTEC
Plant : FORTIER PLANT
Contact : OREY TANNER
Telephone : 504-431-6247

Unit : 0002 HAZARDOUS WASTE
SubArea : BB RCRA BB

Initial ACCESSIBLE AN Inspections:	0
Initial ACCESSIBLE DUAL MECH SEAL Inspections:	0
ACCESSIBLE AN Inspections:	0
ACCESSIBLE DUAL MECH SEAL Inspections:	0
ACCESSIBLE Inspections:	100
Total Inspections:	100
First Repair Attempts - ACCESSIBLE AN:	0
First Repair Attempts - ACCESSIBLE DUAL MECH SEAL:	0
First Repair Attempts - ACCESSIBLE:	1
Total Components:	100
Total Leakers:	1
% Leakers:	1.00
Total Source Points:	100
ACCESSIBLE AN Source Points:	0
ACCESSIBLE DUAL MECH SEAL Source Points:	0
ACCESSIBLE Source Points:	100

Inspector _____ Submitted to _____ Date _____

Furmanite F.E.I.P
Leak Record Detail

MONTHLY RCRA BB REPORTS FOR FEBRUARY 1998

Inspections on or after 02/01/98 and on or before 02/28/98
from the beginning tag to the last tag

Site : 003360
Company : CYTEC
Plant : FORTIER PLANT
Contact : OREY TANNER
Unit : 0002 HAZARDOUS WASTE
SubArea : BB RCRA BB
Telephone : 504-431-6247

Tag : 0000006120 Inspection Date : 02/19/98 Repair Required : 03/06/98
Location : HAZ.-WASTE-ACETO-SURGE-TANK M-S-505
Type : VALVES Leak Source : VP Size : 2.00
Product : 2"-P-582-301G
Comment :

PPM	1ST Att Date	Description	Post PPM
1000	02/23/98	TIGHTENED PACKING	0

Repair Date	Description	MR PPM	
02/23/98	TIGHTENED PACKING	0	COMPLETE

Unit Total : 1

Furmanite F.E.I.P
Inspection Detail History

MONTHLY RCRA BB REPORTS FOR FEBRUARY 1998

Inspections on or after 02/01/98 and on or before 02/28/98
from the beginning tag to the last tag

Site : 003360
Company : CYTEC
Plant : FORTIER PLANT
Contact : OREY TANNER
Telephone : 504-431-6247

Unit : 0002 HAZARDOUS WASTE
SubArea : BB RCRA BB

Tag	Typ	Size	Product	Ser	Location	Date	PPM	First Attempt	Repair	PPMINS	Status	Explanation
0000006105	V	2.00	2"-P-582-3	L	ACRYLO.-HAZ. WASTE-ACETO-SURGE-TANK	02/19/98	0					
0000006105-I	A	2.00	2"-P-582-3	L	PP-530A ACETO SRGE TK PMP DSCHG N. MS-505 GRD LVL	02/19/98	0					
0000006105-O	A	2.00	2"-P-582-3	L	PP-530A ACETO SRGE TK PMP DSCHG N. MS-505 GRD LVL	02/19/98	0					
0000006106	V	0.75	2"-P-580-3	L	ACRYLO.-HAZ. WASTE-ACETO-SURGE-TANK	02/19/98	0					
0000006106-I	SC	0.75	2"-P-580-3	L	PP-530A ACETO SRGE TK PMP DSCHG N. MS-505 GRD LVL	02/19/98	0					
0000006106-O	SC	0.75	2"-P-580-3	L	PP-530A ACETO SRGE TK PMP DSCHG N. MS-505 GRD LVL	02/19/98	0					
0000006107	A	0.50	2"-P-580-3	L	ACRYLO.-HAZ. WASTE-ACETO-SURGE-TANK	02/19/98	0					
0000006108	P	0.00	3"-P-579-3	L	PP-530A HAZ WASTE PMP BY MS-505 ACETO SRG TK GR FL	02/19/98	0					
0000006109	V	0.75	3"-P-579-3	L	HAZ.-WASTE-ACETO-SURGE-TANK PUMPS	02/19/98	0					
0000006109-I	SC	0.75	3"-P-579-3	L	PP-530A ACETO SRGE PMP SUCT N. MS-505 TK GRD LVL	02/19/98	0					
0000006109-O	POE	0.75	3"-P-579-3	L	PP-530A ACETO SRGE PMP SUCT N. MS-505 TK GRD LVL	02/19/98	0					
0000006110	V	3.00	3"-P-579-3	L	HAZ.-WASTE-ACETO-SURGE-TANK PUMPS	02/19/98	0					
0000006110-I	A	3.00	3"-P-579-3	L	PP-530A ACETO SRGE PMP SUCT N. MS-505 TK GRD LVL	02/19/98	0					
0000006110-O	A	3.00	3"-P-579-3	L	PP-530A ACETO SRGE PMP SUCT N. MS-505 TK GRD LVL	02/19/98	0					
0000006111	V	3.00	3"-P-579-3	L	HAZ.-WASTE-ACETO-SURGE-TANK M-S-505	02/19/98	0					
0000006111-I	A	3.00	3"-P-579-3	L	PP-530A ACETO SRGE MPMP SUCT N. MS-505 TK GRD LVL	02/19/98	0					
0000006111-O	A	3.00	2"-P-581-3	L	PP-530A ACETO SRGE MPMP SUCT N. MS-505 TK GRD LVL	02/19/98	0					
0000006112	V	1.00	2"-P-582-3	L	PP730-A ACETO SURGE TANK PUMP DISCH N OF MS-505	02/19/98	0					
0000006112-I	SC	3.00	2"-P-582-3	L	PP-530B ACETO SRGE TK PMP SUCT N. MS-505 GRD LVL	02/19/98	0					
0000006112-O	POE	1.00	3"-P-579-3	L	PP-530B ACETO SRGE TK PMP SUCT N. MS-505 GRD LVL	02/19/98	0					
0000006113	V	0.75	3"-P-579-3	L	ACRYLO.-HAZ. WASTE-ACETO-SURGE PUMPS	02/19/98	0					
0000006113-I	SC	0.75	3"-P-579-3	L	PP-530B ACETO SRGE TK PMP SUCT N. MS-505 GRD LVL	02/19/98	0					
0000006113-O	POE	0.75	3"-P-579-3	L	PP-530B ACETO SRGE TK PMP SUCT N. MS-505 GRD LVL	02/19/98	0					
0000006114	P	0.00	2"-P-581-3	L	PP-530B HAZ WASTE PMP BY MS-505 ACETO SRG TK GR FL	02/19/98	0					
0000006115	V	2.00	2"-P-581-3	L	ACRYLO.-HAZ. WASTE-ACETO-SURGE PUMPS	02/19/98	0					
0000006115-I	A	2.00	2"-P-581-3	L	PP-530B ACETO SRGE TK PMP DSC N. MS-505 GRD LVL	02/19/98	0					
0000006115-O	A	2.00	2"-P-581-3	L	PP-530B ACETO SRGE TK PMP DSC N. MS-505 GRD LVL	02/19/98	0					
0000006116	V	0.75	2"-P-581-3	L	ACRYLO.-HAZ. WASTE-ACETO-SURGE PUMPS	02/19/98	0					
0000006116-I	SC	0.75	2"-P-581-3	L	PP-530B ACETO SRGE TK PMP DSC N. MS-505 GRD LVL	02/19/98	0					
0000006116-O	SC	0.75	2"-P-581-3	L	PP-530B ACETO SRGE TK PMP DSC N. MS-505 GRD LVL	02/19/98	0					
0000006117	A	0.75	2"-P-581-3	L	C-101 SATURATOR COOLER ON 2ND. LVL. MEL. STRUCTURE	02/19/98	0					
0000006118	V	2.00	2"-P-581-3	L	ACRYLO.-HAZ. WASTE-ACETO-SURGE PUMPS	02/19/98	0					
0000006118-I	A	2.00	2"-P-581-3	L	PP-530B ACETO SRGE TK PMP DSC N. MS-505 GRD LVL	02/19/98	0					
0000006118-O	A	2.00	2"-P-581-3	L	PP-530B ACETO SRGE TK PMP DSC N. MS-505 GRD LVL	02/19/98	0					
0000006119	V	2.00	2"-P-582-3	L	HAZ.-WASTE-ACETO-SURGE-TANK PUMPS	02/19/98	0					

Furmanite F.E.I.P
Inspection Detail History

MONTHLY RCRA BB REPORTS FOR FEBRUARY 1998

Inspections on or after 02/01/98 and on or before 02/28/98
from the beginning tag to the last tag

Site : 003360
Company : CYTEC
Plant : FORTIER PLANT
Contact : OREY TANNER
Unit : 0002 HAZARDOUS WASTE
SubArea : BB RCRA BB
Telephone : 504-431-6247

Tag	Typ	Size	Product	Ser	Location	Date	PPM	First Attempt	Repair	PPMINS	Status	Explanation
0000006119-I	A	2.00	2"-P-582-3	L	PP-530A ACETO SRGE TK PMP DSCHG N. MS-505 GRD LVL	02/19/98	0					
0000006119-O	A	2.00	2"-P-582-3	L	PP-530A ACETO SRGE TK PMP DSCHG N. MS-505 GRD LVL	02/19/98	0					
0000006120	V	2.00	2"-P-582-3	L	HAZ.-WASTE-ACETO-SURGE-TANK M-S-505	02/19/98	1000	02/23/98	02/23/98	0	COMPLETE	
0000006120-I	A	2.00	2"-P-582-3	L	PP-530A ACETO SRGE TK PMP DSCHG M/ MS-505 GRD LVL	02/19/98	0					
0000006120-O	A	2.00	2"-P-582-3	L	PP-530A ACETO SRGE TK PMP DSCHG M/ MS-505 GRD LVL	02/19/98	0					
0000006121	V	2.00	2"-P-582-3	L	HAZ.-WASTE-ACETO-SURGE-TANK M-S-505	02/19/98	0					
0000006121-I	A	2.00	2"-P-582-3	L	PP-530A ACETO SRGE TK PMP DSCHG N. MS-505 GRD LVL	02/19/98	0					
0000006121-O	A	2.00	2"-P-582-3	L	PP-530A ACETO SRGE TK PMP DSCHG N. MS-505 GRD LVL	02/19/98	0					
0000006122	V	2.00	NO LINE #	L	HAZ.-WASTE-ACETO-SURGE-TANK M-S-505	02/19/98	0					
0000006122-I	A	2.00	NO LINE #	L	PP-530A ACETO SRGE TK PMP DSCHG N. MS-505 GRD LVL	02/19/98	0					
0000006122-O	A	2.00	NO LINE #	L	PP-530A ACETO SRGE TK PMP DSCHG N. MS-505 GRD LVL	02/19/98	0					
0000006123	V	2.00	NO LINE #	L	HAZ.-WASTE-ACETO-SURGE-TANK M-S-505	02/19/98	0					
0000006123-I	A	2.00	NO LINE #	L	PP-530A ACETO SRGE TK PMP DSCHG N. MS-505 GRD LVL	02/19/98	0					
0000006123-O	A	2.00	NO LINE #	L	PP-530A ACETO SRGE TK PMP DSCHG N. MS-505 GRD LVL	02/19/98	0					
0000006124	V	2.00	2"-P-584-3	L	PP-530A ACETO SRGE TK PMP DSCHG N. MS-505 GRD LVL	02/19/98	0					
0000006124-I	A	2.00	2"-P-584-3	L	PP-530A ACETO SRGE TK PMP DSCHG N. MS-505 GRD LVL	02/19/98	0					
0000006124-O	A	2.00	2"-P-584-3	L	PP-530A ACETO SRGE TK PMP DSCHG N. MS-505 GRD LVL	02/19/98	0					
0000006125	V	2.00	2"-P-582-3	L	HAZ.-WASTE-ACETO-SURGE-TANK M-S-505	02/19/98	0					
0000006125-I	A	2.00	2"-P-582-3	L	PP-530A ACETO SRGE TK PMP DSCHG N. MS-505 GRD LVL	02/19/98	0					
0000006125-O	A	2.00	2"-P-582-3	L	PP-530A ACETO SRGE TK PMP DSCHG N. MS-505 GRD LVL	02/19/98	0					
0000006126	CV	2.00	2"-P-582-3	L	HAZ.-WASTE-ACETO-SURGE-TANK M-S-505	02/19/98	0					
0000006126-I	A	2.00	2"-P-582-3	L	PP-530A ACETO SRGE TK PMP DSHG N. MS-505 GRD LVL	02/19/98	0					
0000006126-O	A	2.00	2"-P-582-3	L	PP-530A ACETO SRGE TK PMP DSHG N. MS-505 GRD LVL	02/19/98	0					
0000006127	V	0.50	2"-P-582-3	L	PP-530A ACETO SRGE TK PMP DSCHG N. MS-505 GRD LVL	02/19/98	0					
0000006127-I	SC	0.50	2"-P-582-3	L	PP-530A ACETO SRGE TK PMP DSCHG N. MS-505 GRD LVL	02/19/98	0					
0000006127-O	POE	0.50	2"-P-582-3	L	PP-530A ACETO SRGE TK PMP DSCHG N. MS-505 GRD LVL	02/19/98	0					
0000006128	V	0.50	2"-P-582-3	L	HAZ.-WASTE-ACETO-SURGE-TANK M-S-505	02/19/98	0					
0000006128-I	SC	0.50	2"-P-582-3	L	HAZ.-WASTE-ACETO-SURGE-TANK M-S-505	02/19/98	0					
0000006128-O	SC	0.50	2"-P-582-3	L	HAZ.-WASTE-ACETO-SURGE-TANK M-S-505	02/19/98	0					
0000006129	SC	0.50	2"-P-582-3	L	PP-530A ACETO SRGE TK PMP DSCHG N. MS-505 GRD LVL	02/19/98	0					
0000006130	V	2.00	2"-P-582-3	L	HAZ.-WASTE-ACETO-SURGE-TANK M-S-505	02/19/98	0					
0000006130-I	A	2.00	2"-P-582-3	L	PP-530A ACETO SRGE TK PMP DSCHG N. MS-505 GRD LVL	02/19/98	0					
0000006130-O	A	2.00	2"-P-582-3	L	PP-530A ACETO SRGE TK PMP DSCHG N. MS-505 GRD LVL	02/19/98	0					
0000006131	V	2.00	2"-P-582-3	L	PP-530A ACETO SRGE TK. PMP DISCH N. MS-505 GD. LVL	02/19/98	0					
0000006131-I	A	2.00	2"-P-582-3	L	PP-530A ACETO SRGE TK PMP DSCHG N. MS-505 GRD LVL	02/19/98	0					

Furmanite F.E.I.P
Inspection Detail History

MONTHLY RCRA BB REPORTS FOR FEBRUARY 1998

Inspections on or after 02/01/98 and on or before 02/28/98
from the beginning tag to the last tag

Site : 003360
Company : CYTEC
Plant : FORTIER PLANT
Contact : OREY TANNER
Unit : 0002 HAZARDOUS WASTE
SubArea : BB RCRA BB
Telephone : 504-431-6247

Tag	Typ	Size	Product	Ser	Location	Date	PPM	First Attempt	Repair	PPMINS	Status	Explanation
0000006131-0	A	2.00	2"-P-582-3	L	PP-530A ACETO SRGE TK PMP DSCHG N. MS-505 GRD LVL	02/19/98	0					
0000006374	V	2.00	2"-P-582-3	L	ACRYLO.-HAZ. WASTE-ACETO-SURGE-TANK	02/19/98	0					
0000006374-1	A	2.00	2"-P-582-3	L	PP-530A ACETO SRGE TK PMP DSCHG N. MS-505 GRD LVL	02/19/98	0					
0000006374-0	A	2.00	2"-P-582-3	L	PP-530A ACETO SRGE TK PMP DSCHG N. MS-505 GRD LVL	02/19/98	0					
0000006375	A	2.00	2"-P-582-3	L	PP-530A ACETO SRGE PMP DSCHG N. MS-505 TK GRD LVL	02/19/98	0					
0000006376	A	2.00	3"-P-579-3	L	HAZ.-WASTE-ACETO-SURGE-TANK M-S-505	02/19/98	0					
0000006377	A	3.00	MS-505	L	HAZ.-WASTE-ACETO-SURGE-TANK M-S-505	02/19/98	0					
0000021143	SC	0.50	NO LINE #	L	P/R BTWN CTRL RM & PURIF W. OF WW COL #1 GRD LVL	02/19/98	0					
0000021144	V	3.00	NO LINE #	L	P/R BTWN CTRL RM & PURIF W. OF WW COL #1 GRD LVL	02/19/98	0					
0000021144-1	A	3.00	NO LINE #	L	P/R BTWN CTRL RM & PURIF W. OF WW COL #1 GRD LVL	02/19/98	0					
0000021144-0	A	3.00	NO LINE #	L	P/R BTWN CTRL RM & PURIF W. OF WW COL #1 GRD LVL	02/19/98	0					
0000021146	V	0.75	NO LINE #	L	P/R BTWN CTRL ROOM & PURIF W. OF WW COL #1 GRD LVL	02/19/98	0					
0000021146-0	POE	0.75	NO LINE #	L	P/R BTWN CTRL ROOM & PURIF W. OF WW COL #1 GRD LVL	02/19/98	0					
0000030248	V	0.75		L	MS-505 ACETO SURGE TANK	02/19/98	0					
0000030249	SC	0.50		L	MS-505 ACETO SURGE TANK	02/19/98	0					
0000030250	SC	0.50		L	MS-505 ACETO SURGE TANK PT-2523	02/19/98	0					
0000030251	V	1.50		L	MS-505 ACETO SURGE TANK SUCT. SIDE OF PUMP	02/19/98	0					
0000030251-1	A	1.50		L	MS-505 ACETO SURGE TANK SUCT. SIDE OF PUMP	02/19/98	0					
0000030251-0	A	1.50		L	MS-505 ACETO SURGE TANK SUCT. SIDE OF PUMP	02/19/98	0					
0000030252	V	2.00		L	MS-505 ACETO SURGE TANK DISCHARGE SIDE OF PUMP	02/19/98	0					
0000030252-1	A	2.00		L	MS-505 ACETO SURGE TANK DISCHARGE SIDE OF PUMP	02/19/98	0					
0000030252-0	A	2.00		L	MS-505 ACETO SURGE TANK DISCHARGE SIDE OF PUMP	02/19/98	0					
0000030253	V	2.00		L	MS-505 ACETO SURGE TANK DISCHARGE SIDE OF PUMP	02/19/98	0					
0000030253-1	A	2.00		L	MS-505 ACETO SURGE TANK DISCHARGE SIDE OF PUMP	02/19/98	0					
0000030253-0	A	2.00		L		02/19/98	0					
00000D7249	A	1.50	2"-P-581-3	L	ACETO-SURGE-TK-ON-PUMP-SL7869	02/19/98	0					
00000D7250	A	1.00	2"-P-581-3	L	ACETO-SURGE-TK-ON-PUMP-SL7869	02/19/98	0					
00000D7252	A	1.50	2"-P-580-3	L	ACETO-SURGE-TK-ON-PUMP-SL7870	02/19/98	0					
00000D7253	A	1.50	2"-P-580-3	L	ACETO-SURGE-TK-ON-PUMP-SL7870	02/19/98	0					
00000D7254	SC	0.50	NO LINE #	L	ACETO-SURGE-TK-ON-PUMP-SL7870	02/19/98	0					

Furmanite F.E.I.P
Inspection Detail History

MONTHLY RCRA BB REPORTS FOR FEBRUARY 1998

Inspections on or after 02/01/98 and on or before 02/28/98
from the beginning tag to the last tag

Site : 003360
Company : CYTEC
Plant : FORTIER PLANT
Contact : OREY TANNER
Unit : 0002 HAZARDOUS WASTE
SubArea : BB RCRA BB
Telephone : 504-431-6247

Total FLANGE.....	49
FLANGE Leaking.....	0
% Leaking.....	0.00
Total Control Valve.....	1
Control Valve Leaking.....	0
% Leaking.....	0.00
Total PUMPS.....	2
PUMPS Leaking.....	0
% Leaking.....	0.00
Total POTENTIAL OPEN END.....	5
POTENTIAL OPEN END Leaking.....	0
% Leaking.....	0.00
Total SCREWED CONNECTORS.....	15
SCREWED CONNECTORS Leaking.....	0
% Leaking.....	0.00
Total VALVES.....	28
VALVES Leaking.....	1
% Leaking.....	3.57
Total Components.....	100
Total Leakers.....	1
% Leaking.....	1.00
Total Inspections.....	100

THESE MONTHLY RCRA BB REPORTS FOR FEBRUARY 1998 ARE TRUE AND CORRECT TO THE BEST OF MY KNOWLEDGE.

	OREY TANNER
FURMANITE SUPERVISOR OR REPRESENTATIVE	CYTEC REPRESENTATIVE
11032B CEDAR PARK AVE. BATON ROUGE, LA 70809	10800 RIVER ROAD WESTWEGO, LA 70094

FURMANITE AMERICA, INC.
FOXBORO OVA - 108 DAILY CALIBRATION PROCEDURE

INSTRUMENT MAKE & MODEL: FOXBORO OVA - 108 SERIAL NO.: 2624 FAI NO.: N/A

		LOT#	SHE
CALIBRATION GASES	1) ZERO AIR < 2 PPM THC/CYLINDER NO. H-1C274	0417	7-31-
	2) 100 PPM METHANE IN AIR/CYLINDER NO. 3618E	9426	8-5-
	3) 10.000 PPM METHANE IN AIR/CYLINDER NO. 2904-1	9412	8-6-
LEAK DEFINITIONS:	1) 5C2 PPM METHANE IN AIR/CYLINDER NO. 2H-27738	9404	8-5-
	2) 10C2 PPM METHANE IN AIR/CYLINDER NO. 3762	9410	8-5-
	3) 145C PPM METHANE IN AIR/CYLINDER NO. C3234	9542	12-14
	(4) 500C PPM METHANE IN AIR/CYLINDER NO. 6041946	9411	8-6-
	(5) 10,000 2904-1	9412	8-6-

To begin this procedure, 1) remove the OVA from its case, 2) place the OVA instrument switches into the "ON" position, allow five (5) minutes warm-up, 3) place the OVA Pump switch into the "ON" position and ignite the burner assembly, allow the instrument to warm-up for at least fifteen (15) minutes, then complete the following steps:

A. Collect ZERO AIR and two (2) known concentrations of Methane gas in air, approximately equal to but not greater than 100 PPM and 10.000 PPM into Tedlar Sample Bags (or equivalent). ✓

B. Introduce ZERO AIR then the 100 PPM gas sample and rotate the CALIBRATION "ADJUST" screw until the meter reads 100 PPM. ✓

C. Introduce ZERO AIR then the 10.000 PPM gas sample and adjust the R-4 screw on the electronics board until the meter reads 10.000 PPM. ✓

D. Repeat steps B and C until no further adjustment is necessary. ✓

E. Close Hydrogen supply valve and wait until the flame is extinguished as evidenced by the meter having no reading. ✓

F. Place the CALIBRATION switch in the "LOW" position and rotate the gas select knob until the meter reads 10 PPM. ✓

G. Place the CALIBRATION switch in the "HIGH" position and adjust the R-16 screw on the electronics board until the meter reads 10.000 PPM. ✓

H. Repeat steps F and G until no further adjustment is necessary. ✓

I. Return CALIBRATION switch to "OFF" position. ✓

J. Open Hydrogen Supply valve and relight Flame. ✓

K. Proceed by introducing ZERO AIR and any Calibration gases for LEAK DEFINITIONS applicable to the equipment being monitored at the indicated site and on the date documented on this form. Record readings. ✓

TIME	ZERO AIR INSTRUMENT READING	LEAK DEFINITION CAL. GAS CONCENTRATION	INSTRUMENT READING W/O DILUTION PROBE	INSTRUMENT READING W/ DILUTION PROBE
8:00	5	50C	50C	N/A

I hereby certify that this VOC detector was calibrated based on the specifications outlined in Reference Method 21, CFR 40, Part 60 and applicable LDAR regulations.

☐ Check box for afternoon calibration verification. Time: _____

FURMANITE TECHNICIAN (Signature)	EMPLOYEE NO.	SITE NO	DATE
	2690	03360 (CITEC)	8-19-98

Hazardous Waste VOC Monitoring Program - Air Emission Standards for Equipment Leaks
40 CFR 264.1050 - 1065 and LAC 33:V.1717 - 1745

LAC 33:V.1743 D. Inspection Log - When each leak is detected as specified in LAC 33:V.1719, 1721, 1729 and 1731, the following information shall be recorded in an inspection log and shall be kept in the facility operating record.
LAC 33:V 1743.D.1. - the instrument and operator identification numbers and the equipment identification number;

Instrument Identification Number: 21624 (Foxboro OVA-108)

Operator Identification Number: 2690 (Jesse Aguilar)

Equipment Identification Number: 6120 V (valve)

NOTE: LAC 33:V.1743.C. requires that the weatherproof and readily visible identification on a valve may be removed only after it has been monitored for two (2) successive months and no leak has been detected during those two (2) months.

LAC 33:V 1743.D.2. - the date evidence of a potential leak was found in accordance with LAC 33:V.1731.A;

Date: 2-19-98

LAC 33:V.1743.D.3. - the date the leak was detected and the dates of each attempt to repair the leak;

Date Leak Detected: 2-19-98

Date(s) Repair Attempted: 2-23-98

NOTE: The first repair attempted must be made within five (5) calendar days after the leak is detected.

LAC 33.V.1743.D.4. - repair methods applied in each attempt to repair the leak;

Repair Method(s): Tightened Packing

LAC 33.V.1743.D.5. - "above 10,000" if the maximum instrument reading by the methods specified in LAC 33:V.1741.B after each repair attempt is equal to or greater than 10,000 ppm;

Maximum Instrument reading after each Repair Attempt: Ø ppm

LAC 33:V.1743 D.6. - "repair delayed" and the reason for the delay if a leak is not repaired within 15 calendar days after discovery of the leak;

Reason for Repair Delay: NA

LAC 33 V.1743.D.7 - documentation supporting the delay of repair of a valve in compliance with LAC33:V.1733.C;

Documentation Supporting Repair Delay: NA

LAC 33.V.1743.D 8. - the signature of the owner or operator (or the designee authorized by the owner or operator in writing in the operating record) whose decision it was that repair could not be effected without a hazardous waste management unit shutdown;

Signature: NA

LAC 33:V.1743.D.9. - the expected date of successful repair of the leak if a leak is not repaired within 15 calendar days; and

Expected Date of Successful Repair: NA

LAC 33:V.1743 D.10. - the date of successful repair of the leak.

Date of Successful Repair: 2-23-98

Completed By: Stacy M. Foret **Date:** 3-8-98

ACRYLONITRILE PLANT
LEAK DETECTION AND REPAIR
WEEKLY CHECKLIST
PUMPS AND AGITATORS

WEEK OF: 10/5/97.

CHECK BY: "C" shift

ANCK-0309
10-29-1996

NOTIFY SUPERVISION IF SEAL FOUND LEAKING

CE#	SL#	PUMP I	DESCRIPTION	IN SERVICE		SEAL LEAKING		CORRECTIVE ACTION	WO#
				YES	NO	YES	NO	TAKEN	
45127	8288	PP-831B	PRODUCT COLUMN BOTTOMS		✓				
45119	8267	PP-831A	PRODUCT COLUMN BOTTOMS	✓			✓		
22754	1136	PP-822B	STRIPPER REFLUX		✓				
22792	1135	PP-822A	STRIPPER REFLUX	✓			✓		
22995	1228	PP-832B	PRODUCT COLUMN SIDE STREAM		✓				
46557	1229	PP-832A	PRODUCT COLUMN SIDE STREAM	✓			✓		
22766	1223	PP-828A	DRYER BOTTOMS PUMP		✓				
22764	1224	PP-828B	DRYER BOTTOMS PUMP	✓			✓		
22611	1227	PP-128	DRYER COLUMN BOTTOMS PUMP		✓				
24429	1217	PP-845A	DRYER REFLUX PUMP		✓				
24428	1216	PP-845B	DRYER REFLUX PUMP	✓			✓		
22800	1222	PP-136-2	RECOVERY COL / HEADS COL HQ	✓			✓		
24411	7859	PP-136-3	HEADS II HQ PUMP	✓			✓		
22797	1221	PP-136-1	DRYER COLUMN HQ	✓			✓		
22692	1221	PP-136-1	MQ MTR PUMP	✓			✓		
22784	1127	PP-826A	DRYER COLUMN RECYCLE WATER		✓				
22782	1128	PP-826B	DRYER COLUMN RECYCLE WATER	✓			✓		
22776	1130	PP-813	WASTE WATER COLUMN OVERHEAD		✓				
22994	1131	PP-818A	HEADS COLUMN FEED		✓				
22993	1132	PP-818B	HEADS COLUMN FEED	✓			✓		
45126	8289	PP-846A	PRODUCT COLUMN REFLUX		✓				
[illegible]33	8311	PP-846B	PRODUCT COLUMN REFLUX	✓			✓		
	8139	PP-819	#1 WASTE WATER OVERHEAD WATER	✓			✓		
22758	1133	PP-113-1	RECOVERY DEC RECYCLE	✓			✓		
40002	1134	PP-113-2	WASTE WATER COL #2 OVHD -A		✓				
26086	1259	MS-124	MQ AGITATOR	✓			✓		
22998	1260	MS-125	HQ AGITATOR	✓			✓		
22788	1220	PP-137	MEHQ PUMP	✓			✓		
	1126	PP-821A	STRIPPER BOTTOMS - 2	✓			✓		
	1125	PP-821B	STRIPPER BOTTOMS - 1		✓				
	1253	PP-305	ACETIC ACID STORAGE TANK PUMP	✓			✓		
22207	1212	PP-302	SLOP WATER TANK PUMP	✓			✓		
22204	1250	PP-157C	CRUDE #5 PUMP		✓		✓		
46137	1251	PP-157D	CRUDE #4 PUMP (PP-158)		✓		✓		
22981	1251	PP-157E	WET ACRYLO PUMP	✓			✓		
22790	1250	PP-157B	CRUDE #2 PUMP		✓		✓		
22760	1250	PP-157A	CRUDE #1 PUMP		✓		✓		
	7626	PP-133-2	RUNDOWN TANK B PUMP	✓			✓		
		PP-133	RUNDOWN TANK B SPARE		✓		✓		
	7625	PP-133-1	RUNDOWN TANK A PUMP	✓			✓		
	1238	PP-133-3	RUNDOWN TANK A SPARE		✓		✓		
24418	1233	PP-154-1	#1 HEADS REFLUX PUMP B	✓			✓		
24222	1234	PP-154-2	#1HEADS REFLUX PUMP A		✓				
22671	1236	PP-323-1	#1HEADS BOTTOMS	✓			✓		
22673	1237	PP-323-2	#1HEADS BOTTOMS		✓				
24206	1237	PP-323-3	#1HEADS BOTTOMS		✓				
42562	7363	PP-723A	#2 HEADS COLUMN BOTTOMS PUMP -1	✓			✓		
42563	7364	PP-723B	#2 HEADS COLUMN BOTTOMS PUMP -2		✓				
42541	7361	PP-754A	#2 HEADS COLUMN REFLUX		✓				
42567	7362	PP-754B	#2 HEADS COLUMN REFLUX	✓			✓		
	7371	PP-785	NEUTRALIZATION RECYCLE	✓			✓		

ACRYLONITRILE PLANT
LEAK DETECTION AND REPAIR
WEEKLY CHECKLIST
PUMPS AND AGITATORS

ANCK-0309
10-29-1996

WEEK OF: 10/5/97

CHECK BY: C Shift

NOTIFY SUPERVISION IF SEAL FOUND LEAKING

CE#	SL#	PUMP I	DESCRIPTION	IN SERVICE		SEAL LEAKING		CORRECTIVE ACTION	WO#
				YES	NO	YES	NO	TAKEN	
	7373	PP-766	ACETONITRILE PRODUCT	✓			✓		
24230	7855	PP-523-1	ACETO RECOVERY BOTTOMS	✓			✓		
24228	7854	PP-523-2	ACETO RECOVERY BOTTOMS		✓		✓		
	7372	PP-767	VAPORIZER PURGE	✓			✓		
22631	1142	PP-314B	ABS BOTTOMS		✓		✓		
45902	8893	PP-814	RECOVERY COLUMN FEED - SPARE	✓			✓		
22677	3041	PP-314A	RECOVERY FEED	✓			✓		
22666	1240	PP-141A	GLYCOL BRINE PUMP 1	✓			✓		
22663	1241	PP-141B	GLYCOL BRINE PUMP 2		✓		✓		
40552	1210	PP-301A	CHEMICAL SEWER - NORTH		✓		✓		
23023	1209	PP-301B	CHEMICAL SEWER - SOUTH	✓			✓		
22637	1145	PP-109-1	QUENCH CIRCULATION		✓		✓		
22639	1146	PP-109-2	QUENCH CIRCULATION	✓			✓		
22641	1147	PP-109-3	QUENCH CIRCULATION	✓			✓		
	8872	P-809	QUENCH CIRCULATION	✓			✓		
23369	1024	P-500-3	PROPYLENE CIRCULATION (A)	✓			✓		
45194	1025	P-500-2	PROPYLENE COMMON SPARE (B)		✓		✓		
45193	1026	P-500-1	PROPYLENE OUTLOADING (C)	✓			✓		
45102	8827	P-800	PROPYLENE OUTLOADING	✓			✓		
	3911		AMINONITRILE STORAGE TANK PUMP	✓			✓		
	3850		MIPK UNLOADING PUMP		✓		✓		
	3861		TOLUENE UNLOADING PUMP		✓		✓		
	3873		REACTOR PUMP	✓			✓		
	3884		DRYER PUMP	✓			✓		
	3880		EXTRACTOR PUMP	✓			✓		
	3875		SEAL POT PUMP 'A'		✓		✓		
	3877		SEAL POT PUMP 'B'	✓			✓		
	3871		MIPK TRANSFER PUMP	✓			✓		
	3870		TOLUENE TRANSFER PUMP	✓			✓		

NOTE: IF A LEAK IS DETECTED, NOTIFY SUPERVISOR AND ATTEMPT TO REPAIR WITHIN 5 DAYS. REPAIR MUST BE COMPLETE WITHIN 15 DAYS AND FURMANITE MUST SNIFF WITHIN 5 DAYS OF REPAIR COMPLETION. THE FIRST ATTEMPT AT REPAIR CAN INCLUDE:

1. TIGHTENING OF PACKING GLAND, OR
2. CHECKING SEAL FLUSH IS AT DESIGN PRESSURE AND TEMPERATURE.

CYTEC INDUSTRIES
WESTWEGO PLANT
ANNUAL RCRA BB REPORTS
JANUARY-DECEMBER 1997
DIFFICULT TO MONITOR

Furmanite F.E.I.P
INSPECTION SUMMARY BY COMP.

ANNUAL RCRA BB DIFFICULT TO MONITOR REPORTS 1997

Inspections on or after 01/01/97 and on or before 12/31/97.

Site : 003360
Company : CYTEC
Plant : FORTIER PLANT
Contact : OREY TANNER
Telephone : 504-431-6247

Unit : 0002 HAZARDOUS WASTE
SubArea : BB RCRA BB

Component Type.....: FLANGE
Total Components.....: 6
Total Leaking Components.: 0
Total Inspections.....: 6
Repair Records Generated.: 0
Percent Leakers.....: 0.00

0 PPM	4
1 - 99 PPM	2
100 - 199 PPM	0
200 - 499 PPM	0
500 - 999 PPM	0
1,000 - 1,999 PPM	0
2,000 - 4,999 PPM	0
5,000 - 9,999 PPM	0
10,000 - 24,999 PPM	0
25,000 - 49,999 PPM	0
50,000 - 74,999 PPM	0
75,000 - 99,999 PPM	0
> 99,999 PPM	0

Component Type.....: POTENTIAL OPEN E
Total Components.....: 4
Total Leaking Components.: 0
Total Inspections.....: 4
Repair Records Generated.: 0
Percent Leakers.....: 0.00

0 PPM	4
1 - 99 PPM	0
100 - 199 PPM	0
200 - 499 PPM	0
500 - 999 PPM	0
1,000 - 1,999 PPM	0
2,000 - 4,999 PPM	0
5,000 - 9,999 PPM	0
10,000 - 24,999 PPM	0
25,000 - 49,999 PPM	0
50,000 - 74,999 PPM	0
75,000 - 99,999 PPM	0
> 99,999 PPM	0

Component Type.....: PRD CLOSED VENT
Total Components.....: 1
Total Leaking Components.: 0
Total Inspections.....: 1
Repair Records Generated.: 0
Percent Leakers.....: 0.00

0 PPM	1
1 - 99 PPM	0
100 - 199 PPM	0
200 - 499 PPM	0
500 - 999 PPM	0
1,000 - 1,999 PPM	0
2,000 - 4,999 PPM	0
5,000 - 9,999 PPM	0
10,000 - 24,999 PPM	0
25,000 - 49,999 PPM	0
50,000 - 74,999 PPM	0
75,000 - 99,999 PPM	0
> 99,999 PPM	0

Component Type.....: SCREWED CONNECTO
Total Components.....: 1
Total Leaking Components.: 0
Total Inspections.....: 1
Repair Records Generated.: 0
Percent Leakers.....: 0.00

0 PPM	1
1 - 99 PPM	0
100 - 199 PPM	0
200 - 499 PPM	0
500 - 999 PPM	0
1,000 - 1,999 PPM	0
2,000 - 4,999 PPM	0
5,000 - 9,999 PPM	0
10,000 - 24,999 PPM	0
25,000 - 49,999 PPM	0
50,000 - 74,999 PPM	0
75,000 - 99,999 PPM	0
> 99,999 PPM	0

Furmanite F.E.I.P
INSPECTION SUMMARY BY COMP.

ANNUAL RCRA BB DIFFICULT TO MONITOR REPORTS 1997

Inspections on or after 01/01/97 and on or before 12/31/97.

Site : 003360
Company : CYTEC
Plant : FORTIER PLANT
Contact : OREY TANNER
Telephone : 504-431-6247

Unit : 0002 HAZARDOUS WASTE
SubArea : BB RCRA BB

Component Type.....: VALVES
Total Components.....: 3
Total Leaking Components.: 0
Total Inspections.....: 3
Repair Records Generated.: 0
Percent Leakers.....: 0.00

0 PPM	2
1 - 99 PPM	1
100 - 199 PPM	0
200 - 499 PPM	0
500 - 999 PPM	0
1,000 - 1,999 PPM	0
2,000 - 4,999 PPM	0
5,000 - 9,999 PPM	0
10,000 - 24,999 PPM	0
25,000 - 49,999 PPM	0
50,000 - 74,999 PPM	0
75,000 - 99,999 PPM	0
> 99,999 PPM	0

Furmanite F.E.I.P
INSPECTION SUMMARY BY COMP.

ANNUAL RCRA BB DIFFICULT TO MONITOR REPORTS 1997

Inspections on or after 01/01/97 and on or before 12/31/97.

Site : 003360
Company : CYTEC
Plant : FORTIER PLANT

Site Totals

Total Components.....:	15
Total Leaking Components.:	0
Total Inspections.....:	15
Repair Records Generated.:	0
Percent Leakers.....:	0.00

Furmanite F.E.I.P
Daily Leak Report

ANNUAL RCRA BB DIFFICULT TO MONITOR REPORTS 1997

Inspections From 01/01/97 To 12/31/97

Site : 003360
Company : CYTEC
Plant : FORTIER PLANT
Contact : OREY TANNER
Telephone : 504-431-6247

Unit : 0002 HAZARDOUS WASTE
SubArea : BB RCRA BB

Initial ACCESSIBLE AN Inspections.....:	0
Initial ACCESSIBLE DUAL MECH SEAL Inspections.....:	0
Initial DIFFICULT TO MONITOR Inspections.....:	1
ACCESSIBLE AN Inspections.....:	0
ACCESSIBLE DUAL MECH SEAL Inspections.....:	0
DIFFICULT TO MONITOR Inspections.....:	14
Total Inspections.....:	15
First Repair Attempts - ACCESSIBLE AN.....:	0
First Repair Attempts - ACCESSIBLE DUAL MECH SEAL.....:	0
Total Components.....:	15
Total Leakers.....:	0
% Leakers.....:	0.00
Total Source Points.....:	15
ACCESSIBLE AN Source Points.....:	0
ACCESSIBLE DUAL MECH SEAL Source Points.....:	0
[illegible]CULT TO MONITOR Source Points.....:	15

[illegible]ctor _____ Submitted to _____ Date _____

Furmanite F.E.I.P
Inspection Detail History

ANNUAL RCRA BB DIFFICULT TO MONITOR REPORTS 1997

Inspections on or after 01/01/97 and on or before 12/31/97
from the beginning tag to the last tag

Site : 003360
Company : CYTEC
Plant : FORTIER PLANT
Contact : OREY TANNER
Unit : 0002 HAZARDOUS WASTE
SubArea : BB RCRA BB
Telephone : 504-431-6247

Tag	Typ	Size	Product	Ser	Location	Date	PPM	First Attempt	Repair	PPMINS	Status	Explanation
0000006380	A	2.00	NO LINE #	L	ACRYLO.-HAZ. WASTE-ACETO-SURGE-TANK	12/02/97	0					
0000006387	RCV	4.00	MS-505	L	PSV-578 TO CVS TOP OF MS-505 ACETO STOR TK HAZ WAS	12/02/97	0					
0000006637	V	2.00	2"-P-582-3	L	IN P/R BY ACETO STORAGE TANK NORTH SIDE	06/13/97	14					
0000006637-I	A	2.00	2"-P-582-3	L	PP-530A ACETO SRGE TK PMP DSCHG N. MS-505 GRD LVL	06/13/97	15					
0000006637-O	A	2.00	2"-P-582-3	L	PP-530A ACETO SRGE TK PMP DSCHG N. MS-505 GRD LVL	06/13/97	17					
0000006640	V	2.00	NO LINE #	L	P/R BTWN MMA AND ACRYLO W. OF FLARE 10FT. ELEV.	12/02/97	0					
0000006640-I	SC	2.00	NO LINE #	L	P/R BTWN MMA & ACRYLO W. OF FLARE 10'ELEV	12/02/97	0					
0000006640-O	POE	2.00	NO LINE #	L	P/R BTWN MMA & ACRYLO W. OF FLARE 10'ELEV	12/02/97	0					
0000021140	A	2.00	NO LINE #	L	P/R BTWN MMA & ACRYLO W. OF FLARE 10' ELEV	12/02/97	0					
0000021141	A	2.00	NO LINE #	L	P/R BTWN MMA & ACRYLO W. OF FLARE 10' ELEV	12/02/97	0					
0000021142	A	0.75	NO LINE #	L	P/R BTWN HCN & REACTR IN ACRYLO 20' ELEV	12/02/97	0					
0000021142-O	POE	0.75	NO LINE #	L	P/R BTWN HCN & REACTR IN ACRYLO 20' ELEV	12/02/97	0					
0000021147	V	0.75	3"-P-579-3	L	P/R BTWN CTRL ROOM & PURIF W. OF WW COL #1 GRD LVL	12/02/97	0					
0000021147-O	POE	0.75	3"-P-579-3	L	P/R BTWN CTRL ROOM & PURIF W. OF WW COL #1 GRD LVL	12/02/97	0					
0000030247-O	POE	1.00	MS-505	G	MS-505 ACETO SURGE TANK WEST OF FLARE 30 FT. ELEV.	04/16/97	0					

Furmanite F.E.I.P
Inspection Detail History

ANNUAL RCRA BB DIFFICULT TO MONITOR REPORTS 1997

Inspections on or after 01/01/97 and on or before 12/31/97
from the beginning tag to the last tag

Site : 003360
Company : CYTEC
Plant : FORTIER PLANT
Contact : OREY TANNER
Unit : 0002 HAZARDOUS WASTE
SubArea : BB RCRA BB
Telephone : 504-431-6247

Total FLANGE.....	6
FLANGE Leaking.....	0
% Leaking.....	0.00
Total POTENTIAL OPEN END.....	4
POTENTIAL OPEN END Leaking.....	0
% Leaking.....	0.00
Total PRD CLOSED VENT.....	1
PRD CLOSED VENT Leaking.....	0
% Leaking.....	0.00
Total SCREWED CONNECTORS.....	1
SCREWED CONNECTORS Leaking.....	0
% Leaking.....	0.00
Total VALVES.....	3
VALVES Leaking.....	0
% Leaking.....	0.00
Total Components.....	15
Total Leakers.....	0
% Leaking.....	0.00
Total Inspections.....	15

THESE ANNUAL RCRA BB REPORTS JANUARY - DECEMBER 1997
ARE TRUE AND CORRECT TO THE BEST OF MY KNOWLEDGE.

OREY TANNER

FURMANITE SUPERVISOR
OR REPRESENTATIVE

11032B CEDAR PARK AVE.
BATON ROUGE, LA 70809

CYTEC REPRESENTATIVE

10800 RIVER ROAD
WESTWEGO, LA 70094

Difficult to Monitor Valves

Written plan to assure compliance:

Difficult to monitor valves are so identified in the LDAR database. These components are scheduled for a 365 day interval for screening, consequently during each year the affected component will be screened, the reading recorded in the database and the first attempt at repair will be initiated within 5 days and completed within the requisite 15 days if a leak was documented.

Unsafe to Monitor Valves and Connectors

Written plan to assure compliance:

Unsafe to monitor valves and connectors are so identified in the LDAR database. These components are not scheduled for any specific screening frequency in the database since the "safe to monitor" windows are not predictable. These components are grouped such that when the conditions described for the group occurs the screening takes place. When the affected component is screened , the reading will be recorded in the database and the first attempt at repair will be initiated within 5 days and completed within the requisite 15 days if a leak was documented.

M:\LETTERS\DIF2MON.WPD

APPENDIX PP

LAC 33:V.536
LAC 33:V.1701

Method of Compliance for Equipment

State of Louisiana

Department of Environmental Quality

M.J. "MIKE" FOSTER, JR.
GOVERNOR

J. DALE GIVENS
SECRETARY

April 15, 1998

Mr. Jaswant S. Gill
Cytec Industries
10800 River Road
Westwego, LA 70094

APR 21 1998

RE: Consolidated Fugitive Emissions Program

Dear Mr. Gill:

The Air Quality Division has received the latest submittal for the program the facility will utilize to comply with the consolidated fugitive emission system dated February 19, 1998.

Your submittal is in conformity with the Louisiana Fugitive Emission Program Consolidation Guidelines and will now be utilized as the basis for compliance with State and Federal fugitive programs.

If you have any questions, please contact Mr. Jim Courville at (504) 765-0219.

Sincerely,

Gustave Von Bodungen

Gustave Von Bodungen, P. E.
Assistant Secretary

GVB:JC:wl

c: Southwest Region
Air Toxics
Jim Courville
EPA Region VI

CYTEC

CYTEC INDUSTRIES INC.
Fortier Plant
10800 River Road
Westwego, LA 70094
Tel: (504) 431-9511

February 19, 1998

Mr. Gustave VonBodungen, Assistant Secretary
Louisiana Department of Environmental
Air Quality Division
P.O. Box 82135
Baton Rouge, LA 70884-2135

Fugitive Emission Program Consolidation Request

Dear Mr. VonBodungen:

Pursuant to the memorandum of understanding between the DEQ and EPA signed in April, 1996, please find attached a request to modify our existing fugitive emission program consolidation. In brief, we wish to screen those components subject to RCRA BB as if they were regulated by 40 CFR 63 Subpart H of the HON. This amendment, along with our existing authorizations, will greatly simplify our reporting and record keeping burden.

We hope that we can obtain a letter confirming your acceptance of this modification prior to our proposed implementation date and that you will advise Hazardous Waste Division of your actions.

If you have any questions concerning this request, please contact Mr. O Tanner at (504) 431-6247.

Very truly yours,

Jaswant S. Gill
Director – Manufacturing, Building Blocks

cc: Shan Schatezle, HW Division, LDEQ Baton Rouge
Eric Garner, HW Division, LDEQ Baton Rouge,

Louisiana Fugitive Emission Program Consolidation
Source Notice and Agreement
Cytec Industries, Jefferson Parish

By this notice and agreement, Cytec Industries notifies the Louisiana DEQ (LDEQ) and the United States Environmental Protection Agency (EPA) of the amended consolidation of fugitive emission programs as indicated below, effective July 1,1998. Our original consolidation request dated August 29 , 1994 and the LDEQ approval of September 9,1994 are attached for reference. Semiannual reports will be submitted on February 28 and August 31, to cover the periods from January 1 through June 30 and July 1 through December 31, respectively. Cytec Industries agrees to implement the consolidated program in accordance with the Louisiana Fugitive Emission Program Consolidation Guidelines attached, and accepts federal and state enforceability of the consolidated program by EPA and LDEQ. Cytec Industries further acknowledges the compliance with the consolidated program in accordance with the Guidelines will serve to comply with each of the fugitive emission programs being consolidated. In addition, Cytec Industries acknowledges that noncompliance with the consolidated program in accordance with the Guidelines may subject Cytec Industries to enforcement action for one or more of the fugitive emissions programs being consolidated. Unless successfully challenged or otherwise terminated, this agreement remains in effect until revised or replaced upon request by Cytec Industries, LDEQ or EPA or until the initial Part 70 permits are issued for Cytec Industries, whichever is earliest. If, at any time, the agreement is not in effect with the LDEQ, then it shall not be in effect with the EPA.

Unit or Plant Site	Programs Being Consolidated	Stream Applicability	Overall Most Stringent Program
Fortier Plant (accepted previously) (see attached)	LAC 33:III.2121 60 Subpart VV 63 Subpart H HON LAC 33:III Ch. 51 (Compliance Plan)	10% VOC 10% VOC 5% VOHAP 10% VOTAP	63 Subpart H HON MACT
Fortier Plant (accepted previously) (see attached)	LAC 33:III Ch. 51 (Compliance Plan)	10% ammonia	LAC 33:III.2121 (Ammonia screened as if VOC)
Acrylonitrile Plant (this amendment)	RCRA BB in LAC 33:V Ch. 17 Subch B and 264 Subpart BB	10% VOC 10% VOC 10% VOC	63 Subpart H HON MACT

Signed:

This 27th day of February 1998

CYTEC

CYTEC INDUSTRIES INC.
Fortier Plant
10800 River Road
Westwego, LA 70094
Tel: (504) 431-9511

August 29, 1994

Ms Bliss Higgins
Dept. of Environmental Quality
Air Quality Division
P. O. Box 82135
Baton Rouge, LA 70884-2135

Dear Ms. Higgins:

Re: LAC 33:III.2121 Compliance

The promulgation of Subpart H of 40 CFR 63 has resulted in some concern as to compliance with both this new federal requirement and the existing state regulation due to some conflicting requirements. The EPA recognized this and added clarifying statements that give Subpart H precedent over other federal screening requirements. Consequently, under LAC 33.III.2121.C.5 we are requesting an exemption from the monitoring, recordkeeping and reporting requirements of Section 2121 and in lieu we propose to institute the provisions of 40 CFR 63, Subpart H.

If you have any questions concerning this request, please contact Mr. Orey Tanner at (504) 431-6247.

Very truly yours,

Anita R. Junker
Environmental Manager

ww

(08293)

State of Louisiana

Department of Environmental Quality

Edwin W. Edwards
Governor

September 9, 1994

William A. Kucharski
Secretary

CERTIFIED
P 219 114 784

Ms. Anita R. Junker
American Cyanamid Company
Fortier Plant
10800 River Road
Westwego, LA 70094

RE: AMERICAN CYANAMID COMPANY LETTER, AUGUST 29, 1994

Dear Ms. Junker:

We approve your request to implement the monitoring, recordkeeping, and reporting provisions of 40 CFR 63 Subpart H to serve as compliance with LAC 33:III.2121. However, equipment in contact with volatile organic chemical (VOC) streams which were previously regulated under LAC 33:III.2121 and for which the HON (Subpart H) is not implemented, shall continue to be regulated by LAC 33:III.2121.

If you have any questions concerning this matter, please contact Bliss Higgins at (504) 765-0902.

Sincerely,

Gustave Von Bodungen

Gustave Von Bodungen, P.E.
Assistant Secretary

GVB/jjo
c: Southeast Regional Office

ENVIRONMENTAL DEPT.
SEP 13 1994

State of Louisiana

Department of Environmental Quality

M.J. "MIKE" FOSTER, JR.
GOVERNOR

J. DALE GIVENS
SECRETARY

April 11, 1996

La. Chemical Assoc.
DAN BORNE
Handle / Note / See Me — APR 12 1996 — File / Comments / Destroy
BB EG DT EF GD HG
HN JD MC PB DT

Allyn M. Davis, Director (MD 6PD)
Multimedia Planning and Permitting Division
U.S.E.P.A. Region 6
1445 Ross Avenue
Dallas, Texas 75202-2733

Samuel Coleman, P.E., Director (MD 6EN)
Compliance Assurance and Enforcement Division
U.S.E.P.A., Region 6
1445 Ross Avenue
Dallas, Texas 75202-2733

RECEIVED
OCT 01 1996
SOUTHEAST REGIONAL OFFICE

Dear Gentlemen:

Thank you for your support of the Louisiana fugitive emission program consolidation activities. It is my pleasure to forward to you the Memorandum of Understanding which will formalize our agreement, signed by Mr. J. Dale Givens, Louisiana DEQ Secretary. I agree that this program serves as a fine example of a flexible and practical approach to burden reduction for industries operating under multiple environmental regulations. We look forward to issuing a joint press release with EPA upon enactment of the MOU next Monday.

Today's enclosures have been revised from the forms submitted at our March 4, 1996 Dallas meeting, to address the comments and concerns contained in your letter of April 2, 1996. Enclosure 1 includes the MOU, with three attachments: the Louisiana Fugitive Emission Program Consolidation Guidelines (Attachment 1), comprised of the Stringency Table and the Workpractice Terms and Conditions; the Source Notice and Agreement Form (Attachment 2); and, an Example Source Notice and Agreement (Attachment 3). Enclosure 2 includes additional information from the technical review. The following changes and information are included.

Technical Comments and Recommendations:

1. The Stringency Table has been revised to place the RCRA regulations above LAC 33:III.2121.

2. The Workpractice Terms and Conditions have been revised to clarify that area monitoring under the vinyl chloride NESHAP may not be eliminated.

3. The Workpractice Terms and Conditions have been revised to specify that compressors requiring a seal system with a barrier fluid under a federal standard may not substitute periodic monitoring in lieu of the seal system requirements.

4. A summary of further evaluations regarding the stringency of state MACT and nonattainment RACT programs in comparison to the non-MACT federal programs is provided. My staff has previously provided and discussed this information with your technical review group. I am confident that the state programs in question are appropriately placed above the non-MACT federal programs in the Stringency Table, when examined from an "overall most stringent program" perspective.

Process Comments and Recommendations:

1. The Memorandum of Understanding has been revised to incorporate all changes requested by EPA Region 6. A statement regarding noncompliance has been incorporated, and a provision allowing for updates to the Guidelines has been added.

2. The Source Notice and Agreement has been revised to incorporate all changes requested by EPA Region 6. A statement regarding noncompliance has been incorporated, EPA has been included as a party who may request revisions to the Agreement, and a provision has been added to ensure that the agreement must be in effect with the State to be in effect with EPA.

As discussed during the conference call held on Friday, March 29, we are in agreement with the milestones and dates provided by your office in the proposed timeline for implementing the Louisiana Fugitive Emission Program Consolidation Guidelines. As you are probably aware, several sections of the Louisiana SIP already contain language which provides for the approval of alternative compliance options. We will proceed to initiate rulemaking procedures to revise the SIP to explicitly allow for alternatives across all sections, with a targeted proposal date of June 20, 1996.

I am pleased with the outcome of this cooperative effort, and commend your staff for their hard work and enthusiasm in quickly reaching consensus on the enclosed package. Please express my commendations to Tom Diggs, John Hepola, Donna Ascenzi, Jole Luehrs, Guy Donaldson, Jeanne McDaniels, Tom Driscoll, and the rest of your staff who contributed to this project for a job well done.

Sincerely,

Robert P. Hanauch for

Gustave Von Bodungen, P.E.
Assistant Secretary

GVB/BMH/bmh

c: Tom Diggs (MD 6PD-L), Section Chief Air Planning, EPA R6
Henry Graham, Louisiana Chemical Association
Derek Reese, Exxon Chemicals America
Kerry Hawkins, Exxon Company, U.S.A. (Refinery)
Dave Mihalik, Dow Chemical, U.S.A.

Enclosure 1

Memorandum of Understanding with Attachments

1. Louisiana Fugitive Emission Program Consolidation Guidelines
   - Stringency Table
   - Workpractice Terms and Conditions

2. Source Notice and Agreement Form

3. Example Source Notice and Agreement

Memorandum of Understanding Between

Louisiana Department of Environmental Quality
Office of Air Quality and Radiation Protection

and

U.S. Environmental Protection Agency
Region 6

Fugitive Emission Program Consolidation

The State and EPA Region 6 agree to implement and enforce fugitive emission program requirements in accordance with the "Louisiana Fugitive Emission Program Consolidation Guidelines" (Attachment 1) to provide a mechanism for consolidating overlapping state and federal equipment leak programs in agreement with the affected source. EPA Region 6 and the State accept federal and state enforceability of the consolidated program. The State and EPA Region 6 further agree that compliance with a consolidated program in accordance with the Guidelines will be considered compliance with each of the fugitive emission programs being consolidated. Furthermore, it is understood that an affected source's noncompliance with the consolidated program requirements may subject the affected source to enforcement action for one or more of the requirements of fugitive emissions programs being consolidated. This agreement will be implemented only through a "Source Notice and Agreement" signed by and specific to each affected source (Form and Example, Attachments 2 and 3). If, in the future, a new federal standard is promulgated (i.e., consolidated air rule, MACT, etc.) that could potentially change the established Guidelines, the Guidelines will be revisited and modified as necessary.

FOR THE LOUISIANA DEPARTMENT OF ENVIRONMENTAL QUALITY

J. Dale Givens, Secretary — 4-9-96 Date

FOR THE ENVIRONMENTAL PROTECTION AGENCY, REGION 6

Allyn M. Davis, Acting Deputy Regional Administrator — Date

Memorandum of Understanding Between

Louisiana Department of Environmental Quality
Office of Air Quality and Radiation Protection

and

U.S. Environmental Protection Agency
Region 6

Fugitive Emission Program Consolidation

The State and EPA Region 6 agree to implement and enforce fugitive emission program requirements in accordance with the "Louisiana Fugitive Emission Program Consolidation Guidelines" (Attachment 1) to provide a mechanism for consolidating overlapping state and federal equipment leak programs in agreement with the affected source. EPA Region 6 and the State accept federal and state enforceability of the consolidated program. The State and EPA Region 6 further agree that compliance with a consolidated program in accordance with the Guidelines will be considered compliance with each of the fugitive emission programs being consolidated. Furthermore, it is understood that an affected source's noncompliance with the consolidated program requirements may subject the affected source to enforcement action for one or more of the requirements of fugitive emissions programs being consolidated. This agreement will be implemented only through a "Source Notice and Agreement" signed by and specific to each affected source (Form and Example, Attachments 2 and 3). If in the future, a new federal standard is promulgated (i.e., consolidated air rule, MACT, etc.) that could potentially change the established Guidelines, the Guidelines will be revisited and modified as necessary

FOR THE LOUISIANA DEPARTMENT OF ENVIRONMENTAL QUALITY

J. Dale Givens, Secretary — 1-9-96
Date

FOR THE ENVIRONMENTAL PROTECTION AGENCY, REGION 6

Allyn M. Davis, Acting Deputy Regional Administrator — 4/17/96
Date

Louisiana Fugitive Emission Program Consolidation Guidelines

Stringency Table. This stringency table is to be used in conjunction with the Workpractice Terms and Conditions. Of the applicable equipment leak programs being consolidated, the program highest in the table hierarchy is to be considered the overall most stringent program under the Guidelines. The Guidelines may be used only in accordance with a Source Notice and Agreement or a Title V permit.

40 CFR 63 Subpart H - SOCMI HON MACT
40 CFR 63 Subpart U - Polymers and Resins I, Elastomer MACT
LAC 33:III.Chapter 51 - Louisiana MACT Determination for Non-HON Sources Louisiana MACT Determination for Refineries
LAC 33:III.2122 - Louisiana Fugitive Emission Control for Nonattainment
40 CFR 63 Subpart CC - Refinery MACT Modified HON Option
40 CFR 61 Subparts F, J & V (LAC 33:III.5121, 5133 and 5171) - NESHAP for Equipment Leaks of Benzene and Vinyl Chloride
40 CFR 60 Subparts VV and GG (LAC 33:III.3730-3749, and 4780-4783) - NSPS for Equipment Leaks of VOC in SOCMI or Refineries 40 CFR 63 Subpart CC - Refinery MACT NSPS Option
40 CFR 264 - RCRA Subpart BB & CC
LAC 33:III.2121 - Louisiana Fugitive Emission Control

Louisiana Fugitive Emission Program Consolidation Guidelines

Workpractice Terms and Conditions. These terms and conditions are to be used in conjunction with the Stringency Table. Of the applicable equipment leak programs being consolidated, the program highest in the table hierarchy is to be considered the overall most stringent program under the Guidelines. The Guidelines may be used only in accordance with a Source Notice and Agreement or a Title V permit.

Applicability and Exemptions

- The consolidated program will apply to the combined universe of components subject to any of the programs being consolidated.
- Component types (e.g. connectors) which do not require periodic monitoring under the overall most stringent program must be monitored as required by the most stringent requirements of any other program being consolidated and will not be exempt.
- The consolidated program will include any exemptions based on size of component available in any of the programs being consolidated.
- The consolidated program cannot be used to replace requirements for area monitoring under the vinyl chloride NESHAP.
- For any compressor subject to a federal rule requiring a seal system including barrier fluid, sensor, and alarm, periodic monitoring of compressors may not be used in lieu of the seal system requirements, regardless of the overall most stringent program.

Leak Definitions

- Leak definitions are based on the overall most stringent program as determined from the Stringency Table.
- Phase-in periods allowed under federal regulations are not eliminated as long as there is no backsliding of existing monitoring programs.

Monitoring Frequency

- Monitoring frequency will be based on the overall most stringent program as determined from the Stringency Table.
- Annual monitoring shall be defined as once every 4 quarters, regardless of the overall most stringent program. Some allowance may be made in the first year of the consolidated program in order to allow for transition from existing monitoring schedules.

Calibration

- Use of dilution device for calibration, as defined in Method 21, is acceptable.

Identification of Components

- All leaking components must be tagged.
- If the Benzene NESHAP and a more stringent program are applicable, the overall most stringent program prevails and physical tagging of components is therefore not required. Identification, either by list or location (area or group) of affected components is acceptable.

Leak Performance

- The determination of leak performance is based on the overall most stringent program as determined from the Stringency Table.

Repair

- Repair period requirements are always first attempt within 5 days of detecting the leak and final repair within 15 days of detecting the leak, regardless of the overall most stringent program.

Post Repair

- Post repair inspection consists of remonitoring once within 3 months after repair of leaks, regardless of the overall most stringent program.

Record keeping and Reporting

- Record keeping and reporting information requirements will be based on the overall most stringent program as determined from the Stringency Table.
- Reporting frequency will be semi-annual regardless of the overall most stringent program.
- Reports will include records for any monitoring performed within the semi-annual reporting period.

Louisiana Fugitive Emission Program Consolidation
Source Notice and Agreement
[Name and Parish of Source]

By this notice and agreement, [Name of Source] notifies the Louisiana DEQ (LDEQ) and the United States Environmental Protection Agency (EPA) of the consolidation of fugitive emission programs as indicated below, effective [insert date]. Semiannual reports will be submitted on [insert date] and [insert date], to cover the periods [insert dates] and [insert dates], respectively. [Name of Source] agrees to implement the consolidated program in accordance with the Louisiana Fugitive Emission Program Consolidation Guidelines attached, and accepts federal and state enforceability of the consolidated program by EPA and LDEQ. [Name of Source] further acknowledges that compliance with the consolidated program in accordance with the Guidelines will serve to comply with each of the fugitive emission programs being consolidated. In addition, [Name of Source] acknowledges that noncompliance with the consolidated program in accordance with the Guidelines may subject [Name of Source] to enforcement action for one or more of the fugitive emissions programs being consolidated. Unless successfully challenged or otherwise terminated, this agreement remains in effect until revised or replaced upon request by [Name of Source], LDEQ, or EPA, or until the initial Part 70 permit is issued for [Name of Source], whichever is earliest. If, at any time, the agreement is not in effect with the State, then it shall not be in effect with EPA.

Unit or Plant Site	Programs being Consolidated	Stream Applicability	Overall Most Stringent Program

Signed

_____

_____

This _____ day of _____, 199__

Louisiana Fugitive Emission Program Consolidation
Source Notice and Agreement
Louisiana Chemical Company, East Baton Rouge Parish

By this notice and agreement, Louisiana Chemical Company (LCC) notifies the Louisiana Department of Environmental Quality (LDEQ) and the United States Environmental Protection Agency (EPA) of the consolidation of fugitive emission programs as indicated below, effective May 1, 1996. Semiannual reports will be submitted on December 15 and June 15, to cover the periods May 1 through October 31 and November 1 through April 30, respectively. LCC agrees to implement the consolidated program in accordance with the Louisiana Fugitive Emission Program Consolidation Guidelines attached, and accepts federal and state enforceability of the consolidated program by EPA and LDEQ. LCC further acknowledges that compliance with the consolidated program in accordance with the Guidelines will serve to comply with each of the fugitive emission programs being consolidated. In addition, LCC acknowledges that noncompliance with the consolidated program in accordance with the Guidelines may subject LCC to enforcement action for one or more of the fugitive emissions programs being consolidated. Unless successfully challenged or otherwise terminated, this agreement remains in effect until revised or replaced upon request by LCC, LDEQ, or EPA, or until the initial Part 70 permit is issued for LCC, whichever is earliest. If, at any time, the agreement is not in effect with the State, then it shall not be in effect with EPA.

Unit or Plant Site	Programs being Consolidated	Stream Applicability	Overall Most Stringent Program
Elastomer Production	LA Non-HON 63 Sub U - P & R I LAC 33:III.2122	5% VOTAP 5% VOHAP 10% VOC	63 Subpart U - Polymers & Resins MACT I
LAB Plant	63 Sub H - HON LAC 33:III.2122 NSPS Benzene NESHAP	5% VOHAP 10% VOC 10% VOC 5% Benzene	63 Subpart H - HON MACT
VCM Plant	63 Sub H - HON NSPS LAC 33:III.2122 VC NESHAP	5 % VOHAP 10% EDC 10% VOC 10% VCM	
PVC Plant	VC NESHAP LAC 33:III.2122 LA Non-HON	10% VCM 10% VOC 5% VOTAP	LA Non-HON MACT

Signed

_____

This _____ day of _____, 199___

Enclosure 2

Addtional Information from the Technical Review

1. Table G-1. Determination of LDAR Control Effectiveness at SOCMI Process Units
   (EPA-453/R-95-017 November 1995 "Protocol for Equipment Leak Emission Estimates")

2. Table G-2. Determination of LDAR Control Effectiveness at Refinery Process Unit
   (EPA-453/R-95-017 November 1995 "Protocol for Equipment Leak Emission Estimates")

TABLE G-1. DETERMINATION OF LDAR CONTROL EFFECTIVENESS AT SOCMI PROCESS UNITS

(EPA-453/R-95-017 November 1995 "Protocol for Equipment Leak Emission Estimates")

Equipment type	Applicable programs	Monitoring frequency	Leak definition (ppmv)	Initial Leak fraction (percent)	Initial Leak Rate (kg/hr/src)	Steady-state leak fraction after LDAR implemented (percent): Immediately after LDAR monit.	Immediately prior to LDAR monit.	Cycle average	Final Leak rate (kg/hr/src)	LDAR control effectiveness (percent)	EXXON CHEMICAL No. of components	Total Leak Rate (kg/hr)	ALR factors a	b
LL Valves	NSPS, NESHAP	Monthly	10,000	4.3	0.0040	0.20	0.88	0.54	0.00065	84%	110,000	72	0.089	1.70E-04
	2121	Quarterly	10,000	4.3	0.0040	0.59	2.00	1.30	0.00132	67%	110,000	145	0.069	1.70E-04
	LA MACT; 2122	Quarterly	1,000	7.5	0.0040	0.00	2.00	1.00	0.00057	86%	110,000	63	0.053	3.90E-05
	HON reg neg	Monthly	500	8.5	0.0040	0.00	2.00	1.00	0.00050	88%	110,000	55	0.047	2.70E-05
Gas Valves	NSPS, NESHAP	Monthly	10,000	7.5	0.0060	0.29	1.29	0.79	0.00075	88%	30,000	22	0.078	1.30E-04
	2121	Quarterly	10,000	7.5	0.0060	0.86	2.00	1.43	0.00125	79%	30,000	37	0.078	1.30E-04
	LA MACT, 2122	Quarterly	1,000	11.5	0.0058	0.00	2.00	1.00	0.00053	91%	30,000	16	0.05	2.80E-05
	HON reg neg	Monthly	500	13.6	0.0060	0.00	2.00	1.00	0.00046	92%	30,000	14	0.044	1.70E-05
LL Pumps	NSPS, NESHAP	Monthly	10,000	7.5	0.0199	0.00	3.53	1.77	0.00614	69%	500	3	0.24	1.90E-03
	2121	Quarterly	10,000	7.5	0.0199	0.00	7.50	3.75	0.01090	45%	500	5	0.24	1.90E-03
	2122	Quarterly	5,000	9.25	0.0199	0.00	7.50	3.75	0.00890	55%	500	4	0.2	1.40E-03
	LA MACT	Quarterly	2,000	14.6	0.0199	0.00	8.04	4.02	0.00590	70%	500	3	0.13	6.70E-04
	HON reg neg	Monthly	1,000	17.1	0.0199	0.00	8.04	4.02	0.00488	75%	500	2	0.11	4.60E-04
Connectors	NSPS, NESHAP	None	10,000		0.0018				0.00180	0%	308,000	554	0.11	8.10E-05
	2121	None	10,000		0.0018				0.00180	0%	308,000	554	0.11	8.10E-05
	2122	None	1,000		0.0018				0.00180	0%	308,000	554	0.06	2.50E-05
	LA MACT	Annually (200)	1,000		0.0018				0.00180	0%	308,000	554	0.06	2.50E-05
	HON reg neg	Annually	500	3.9	0.0019	0.00	0.50	0.25	0.00013	93%	308,000	41	0.047	1.70E-05

SOCMI TOTALS	Valves (kg/hr)	Pumps (kg/hr)	Connectors (kg/hr)	Total (w/o) (kg/hr)	Total (w/conn) (kg/hr)
NSPS, NESHAP	94	3	554	97	651
2121	183	5	554	188	743
2122	78	4	554	83	637
LA MACT	78	3	554	81	636
HON	68	2	41	71	112

TABLE G-2. DETERMINATION OF LDAR CONTROL EFFECTIVENESS AT REFINERY PROCESS UNITS

(EPA-453/R-95-017 November 1995 "Protocol for Equipment Leak Emission Estimates")

Equipment type	Applicable programs	Control program	Leak definition (ppmv)	Initial Leak fraction (percent)	Initial Leak Rate (kg/hr)	Steady-state leak fraction after LDAR implemented (percent): Immediately after LDAR monit.	Immediately prior to LDAR monit.	Cycle average	Final Leak rate (kg/hr)	LDAR control effectiveness (percent)	EXXON REFINERY No. of components	Total Leak Rate (kg/hr)	ALR factors a	b
LL Valves	NSPS, NESHAP	Monthly	10,000	11	0.0109	0.39	1.72	1.06	0.00259	76%	50,000	129	0.084	1.70E-03
	2121	Quarterly	10,000	11	0.0109	1.15	2.00	1.58	0.00302	72%	50,000	151	0.084	1.70E-03
	LA MACT, 2122	Quarterly	1,000	22	0.0095	0.00	2.00	1.00	0.00070	93%	50,000	35	0.042	2.80E-04
	HON reg neg	Monthly	500	28.5	0.0109	0.00	2.00	1.00	0.00058	95%	50,000	29	0.038	2.00E-04
Gas Valves	NSPS, NESHAP	Monthly	10,000	10	0.0268	0.36	1.60	0.98	0.00315	88%	25,000	79	0.26	6.00E-04
	2121	Quarterly	10,000	10	0.0268	1.06	2.00	1.53	0.00458	83%	25,000	114	0.26	6.00E-04
	LA MACT, 2122	Quarterly	1,000	20	0.0261	0.00	2.00	1.00	0.00144	94%	25,000	36	0.13	1.40E-04
	HON reg neg	Monthly	500	24	0.0268	0.00	2.00	1.00	0.00119	96%	25,000	30	0.11	8.80E-05
LL Pumps	NSPS, NESHAP	Monthly	10,000	24	0.1140	0.00	11.28	5.64	0.03625	68%	1,000	36	0.43	1.20E-02
	2121	Quarterly	10,000	24	0.1140	0.00	24.00	12.00	0.06360	44%	1,000	64	0.43	1.20E-02
	2122	Quarterly	2,000											
	LA MACT	Quarterly	1,000	49	0.1124	0.00	2.00	1.00	0.00430	96%	1,000	4	0.23	2.00E-03
	HON reg neg	Monthly	1,000	48	0.1140	0.00	10.00	5.00	0.01350	88%	1,000	14	0.23	2.00E-03
Connectors	NSPS, NESHAP	None	10,000		0.0003				0.00025	0%	165,000	41	0.037	6.00E-05
	2121	None	10,000		0.0003				0.00025	0%	165,000	41	0.037	6.00E-05
	2122	None	1,000		0.0003				0.00025	0%	165,000	41	0.017	1.80E-05
	LA MACT	Annually	1,000		0.0003				0.00025	0%	165,000	41	0.017	1.80E-05
	HON reg neg	Monthly	500	1.7	0.0003	0.00	0.50	0.25	0.00005	81%	165,000	8	0.014	1.30E-05

Compressors

REFINERY TOTALS	Valves (kg/hr)	Pumps (kg/hr)	Connectors (kg/hr)	Total (w/o) (kg/hr)	Total (w/conn) (kg/hr)
NSPS, NESHAP	208	36	41	244	286
2121	266	64	41	329	370
2122	71	n/a	41	n/a	n/a
LA MACT	71	4	41	75	117
HON	59	14	8	72	80

REQUEST FOR PERMIT SHIELD
ACRYLONITRILE PLANT

LAC 33:III.2103

Sources 8-73, 31-79, 45-79, 46-79, 5-88, 1-89, 52-92, and 100-95 are subject to the applicable requirements under LAC 33:III.2103, 40 CFR Part 60 Subpart Kb, and 40 CFR Part 63 Subpart G. Cytec Industries is requesting a permit shield for the LAC 33:III.2103. A permit shield is not necessary for 40 CFR Part 60 Subpart Kb due to an exemption stated in 40 CFR Part 63 Subpart G. As such, Cytec proposes to comply with the more stringent requirements of 40 CFR Part 63 Subpart G for control, monitoring, recordkeeping and reporting.

LAC 33:III.2121

The Acrylonitrile Plant fugitives source, as well as sources 50-92a, 50-92b, 50-92c, 77-93, 78-93, 79-93, 80-93, and 81-93, are subject to the applicable requirements under LAC 33:III.2121, 40 CFR Part 60 Subpart VV, and 40 CFR Part 63 Subpart H. Cytec Industries submitted a written request to the Louisiana Department of Environmental Quality (LDEQ) for an exemption from the monitoring, recordkeeping and reporting requirements of LAC 33:III.2121. In this letter, dated August 24, 1994, Cytec proposed to the LDEQ that compliance with the more stringent requirements 40 CFR Part 63 Subpart H (HON) would also demonstrate compliance with LAC 33:III.2121. A permit shield is not necessary for 40 CFR Part 60 Subpart VV due to an exemption stated in 40 CFR Part 63 Subpart H. See attached letter and subsequent LDEQ response approving the request.

State of Louisiana

Department of Environmental Quality

Edwin W. Edwards
Governor

September 9, 1994

CERTIFIED
P 219 114 784

William A. Kucharski
Secretary

Ms. Anita R. Junker
American Cyanamid Company
Fortier Plant
10800 River Road
Westwego, LA 70094

RE: AMERICAN CYANAMID COMPANY LETTER, AUGUST 29, 1994

Dear Ms. Junker:

We approve your request to implement the monitoring, recordkeeping, and reporting provisions of 40 CFR 63 Subpart H to serve as compliance with LAC 33:III.2121. However, equipment in contact with volatile organic chemical (VOC) streams which were previously regulated under LAC 33:III.2121 and for which the HON (Subpart H) is not implemented, shall continue to be regulated by LAC 33:III.2121.

If you have any questions concerning this matter, please contact Bliss Higgins at (504) 765-0902.

Sincerely,

Gustave Von Bodungen

Gustave Von Bodungen, P.E.
Assistant Secretary

GVB/jjo
c: Southeast Regional Office

ENVIRONMENTAL DEPT.
SEP 13 1994

CYTEC

CYTEC INDUSTRIES INC.
Fortier Plant
10800 River Road
Westwego, LA 70094
Tel: (504) 431-9511

August 29, 1994

Ms. Bliss Higgins
Dept. of Environmental Quality
Air Quality Division
P. O. Box 82135
Baton Rouge, LA 70884-2135

Dear Ms. Higgins:

Re: LAC 33:III.2121 Compliance

The promulgation of Subpart H of 40 CFR 63 has resulted in some concern as to compliance with both this new federal requirement and the existing state regulation due to some conflicting requirements. The EPA recognized this and added clarifying statements that give Subpart H precedent over other federal screening requirements. Consequently, under LAC 33.III.2121.C.5 we are requesting an exemption from the monitoring, recordkeeping and reporting requirements of Section 2121 and in lieu we propose to institute the provisions of 40 CFR 63, Subpart H.

If you have any questions concerning this request, please contact Mr. Orey Tanner at (504) 431-6247.

Very truly yours,

Anita R. Junker
Environmental Manager

ww

(08293)