Jefferson Parish

LDEQ-CWRLF Energy Efficiency and Environmentally Innovative Business Case for Green Project Reserve

Project Description

Currently the Jonathan Davis Wastewater Treatment Plant (WWTP), located in Barataria, LA, routinely fails to meet discharge limits. The existing treatment plant is located alongside Privateer Blvd. adjacent to 111 acres of degraded wetlands northwest of the WWTP site. The plant is past its 25 year lifespan and has deteriorated to the point where replacement is required to meet Louisiana Pollutant Discharge Elimination System (LPDES) effluent treatment limit requirements.

To meet LPDES requirements, a new treatment plant to replace the existing plant is currently being designed. Additionally, the two influent lift stations are also being replaced. Environmentally innovative design methods are proposed. These methods include the use of ultraviolet disinfection, variable frequency drives, and NEMA Premium efficiency motors. An additional environmentally innovative design method involves reconfiguration of the effluent. This method incorporates wetland assimilation, a feasible alternative providing a more energy efficient and environmentally beneficial design.

The replacement of the Jonathan Davis WWTP is divided into two projects: Project 1 which involves the new WWTP and two influent lift stations and Project 2 which involves the wetland assimilation portion.

Project 1 – New Wastewater Treatment Plant

Disinfection at the new WWTP will be provided by a flow through type Ultraviolet (UV) disinfection facility to preclude the need for storage of chemicals such as chlorine or chloramines at the plant site. Utilization of this technology will allow for the complete elimination of disinfection chemical storage or use at the new plant. The facility will be elevated on a working platform approximately 6 to 9 feet above finished grade to elevate all electrical components above the 100-year base flood elevation. The platform will be constructed of structural steel support beams and lateral bracing, precast concrete pilings and precast concrete slabs connected to the structural steel with welded plates. An illustration of some of the design components is shown in Figure 1.

A goal of the Parish is to reduce energy consumption and subsequently reduce energy production required to operate motors at the WWTP and lift stations. Motors for all equipment included in this project will be specified as NEMA Premium Efficient motors unless not available.

The motors used in WWTPs are required to operate frequently throughout their design life. The U.S. Department of Energy states that when annual operation exceeds 2,000 hours, premium efficiency motors are especially effective in terms of cost and energy. Table 1 presents the efficiency differences and predicted annual energy savings between standard efficient motors and premium efficiency motors.

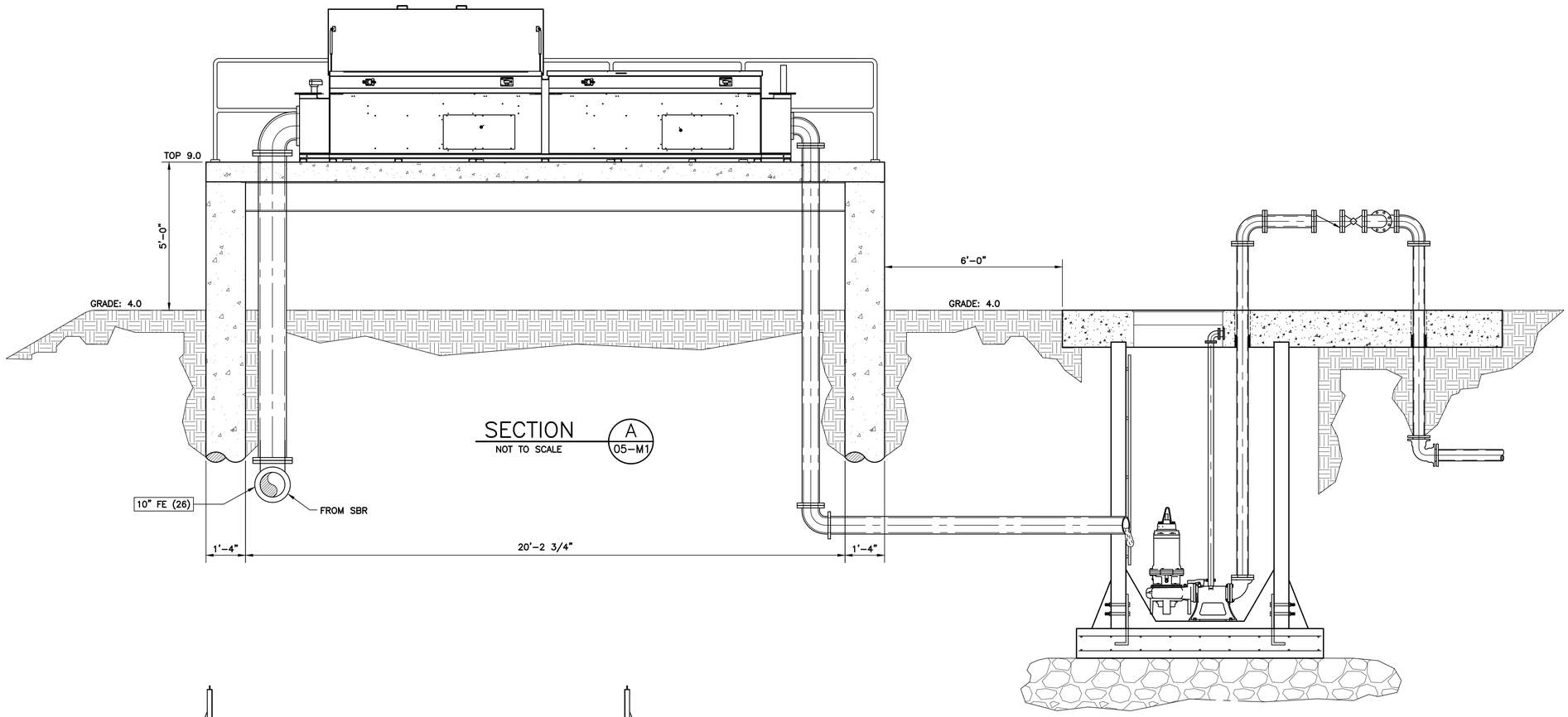

SECTION (A / 05-M1)
NOT TO SCALE

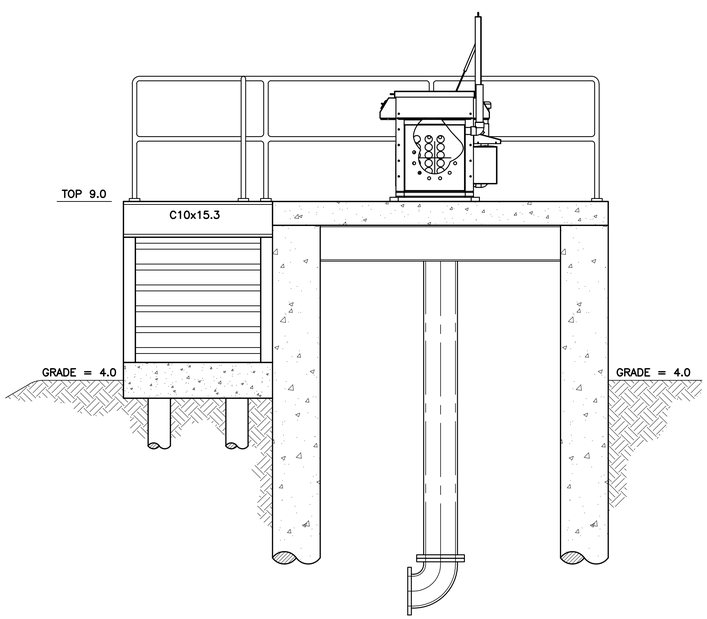

SECTION (B / 07-M1)
NOT TO SCALE

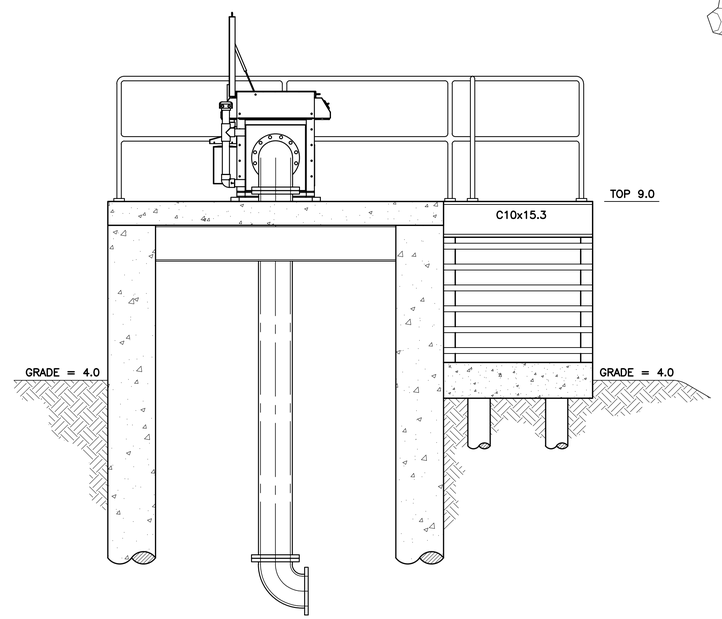

SECTION (C / 07-M1)
NOT TO SCALE

VALVE TABLE

VALVE	DIA.	SPEC. SECTION
07-PV-02	8"	15207
07-CV-02	8"	15203

EQUIPMENT TABLE

EQUIPMENT		SPEC. SECTION
07-E5	UV DISINFECTION UNIT	11250
07-E6	SUBMERSIBLE PUMP	11148

PUMP DATA TABLE

PUMP	07-E6 (TYP. OF 2)
DESIGN CAPACITY (GPM)	781
DESIGN TOTAL DYNAMIC HEAD (FT)	22
DESIGN PUMP DISCHARGE (IN)	8
DESIGN PUMP SPEED (RPM)	1750
DESIGN MOTOR SPEED (RPM)	1750
DESIGN MOTOR SIZE (HP)	7.5
NO. OF PUMPS	2
TYPE	SUBMERSIBLE NON-CLOG W/ PREMIUM EFFICIENCY MOTOR

Figure 1

PRELIMINARY
NOT TO BE USED FOR CONSTRUCTION, BIDDING, RECORDATION, SALES OR AS THE BASIS FOR ISSUANCE OF A PERMIT
DAVID A. MARTIN, P.E.
LICENSE NO. 37832
H. DAVIS COLE & ASSOCIATES, LLC

SUBMITTED BY: DAVID A. MARTIN, PROJECT MANAGER — LICENSE NO. 37832 — 3/20/15 DATE
SUBMITTED BY: H. DAVIS COLE, COMPANY OFFICER — LICENSE NO. 30128 — 3/20/15 DATE

H. Davis Cole & Associates, LLC
Consulting Engineers
New Orleans, LA

MARK	DESCRIPTION	DATE	BY	CHK'D.

REVISION RECORD

DESIGNED BY: HDC
DRAWN BY: PWP
CHECKED BY: DAM
DATE: MARCH, 2015
SCALE: VARIES
HDC PROJECT NO. 2011-08

RECONSTRUCTION OF THE JONATHAN DAVIS WWTP
BARATARIA LOUISIANA
JEFFERSON PARISH DEPT. OF SEWERAGE
1221 ELMWOOD PARK BLVD. STE 803
JEFFERSON, LA 70123
DISINFECTION FACILITY MECHANICAL SECTIONS

SHEET ID
07-M2
SHEET SET
36 OF **82**

Table 1 – Annual energy savings for NEMA Premium verses standard efficiency motors.

Horsepower	Motor Efficiency at 75% Load		Annual Energy Savings from Using a Premium Efficiency Motor, kWh
	Standard Efficiency Motor	NEMA Premium Motor	
10	86.7	92.2	3,105
25	89.9	93.8	5,160
50	91.6	95.0	8,630
100	92.2	95.3	15,680
200	93.3	96.2	29,350

Source: U.S. Department of Energy[1]

As shown in the preceding table, each pump motor replaced will save a significant amount of energy consumption in the system. As the horsepower increases energy savings from NEMA premium motors increases.

By utilizing NEMA Premium motors instead of standard efficiency motors at the new Jonathan Davis WWTP, the Parish would benefit from a considerably large reduction in energy consumption and associated energy costs.

The predicted annual kW savings at the Jonathan Davis WWTP is shown in Table 2. Annual kW savings for horsepower motors were calculated using Equations 3-5 through 3-7 of the U.S. Department of Energy Premium Efficiency Motor Selection and Application Guide[1].

Table 2 – Predicted annual kW savings at the Jonathan Davis WWTP.

Project Name	Project Type	Pump Hp	Number of Pumps	Annual kW Savings
Jonathan Davis WWTP	Effluent Pump Station	30	2	12,698
	Lift Station	25	2	10,320
	Lift Station	5	2	3,880
		Total kW Annual Savings:		**26,898**

A large portion of energy draw in wastewater facilities comes from pumping. Variable frequency drives (VFDs) are proposed at the effluent pump station to reduce the amount of energy consumption. VFDs are particularly appropriate for application in wastewater treatment where demand on the motor fluctuates throughout the day. A VFD is an electronic controller that adjusts the speed of an electric motor by modulating the power being delivered. Unlike traditional single speed drives, VFDs provide continuous control, matching motor speed to specific demands of the work being performed. This methodology reduces unnecessary energy consumption, hence reducing energy production required to

operate motors. According to affinity laws for pumps, even a small reduction in motor speed will highly leverage energy savings. VFDs can reduce a pump's energy use by as much as 50%[2].

The estimated construction cost of Project 1 is $3,610,000.

Project 2 – Wetland Assimilation

Dependent upon flow easements, the proposed WWTP design involves the discharge of 0.25 million gallons per day (MGD) of secondarily-treated wastewater into the adjacent wetlands instead of the current discharge location, Bayou Barataria. The goal of this design is to not only reduce energy consumption at the WWTP by eliminating tertiary treatment requirements but to also benefit the degraded forested wetlands adjacent to the treatment facility. See Figures 2 and 3 below which show the location of the proposed assimilation wetland.

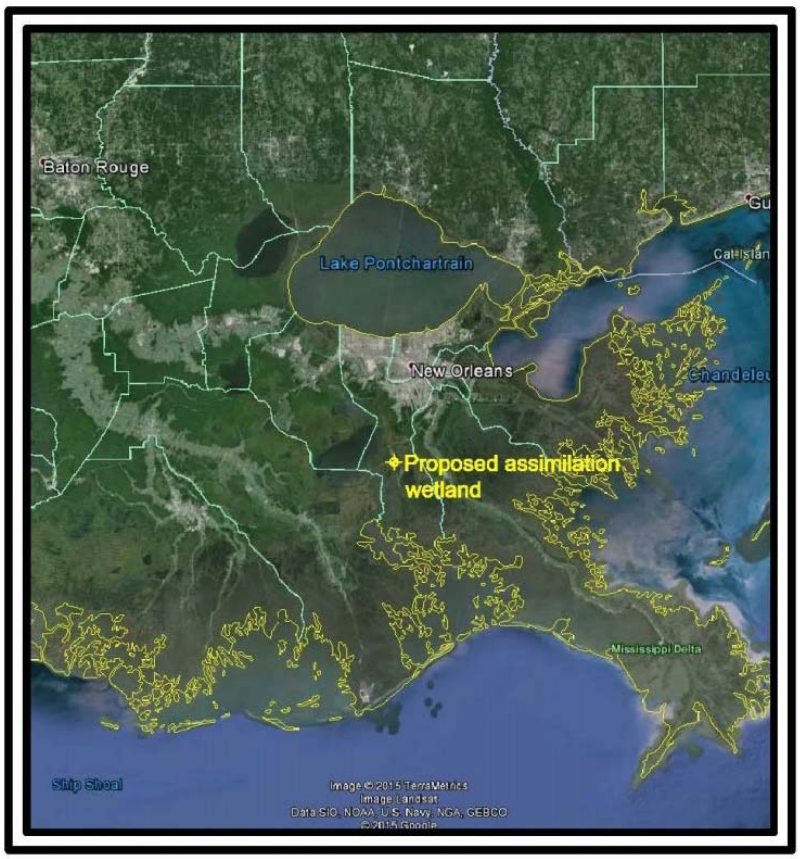

Figure 2 – Vicinity Map

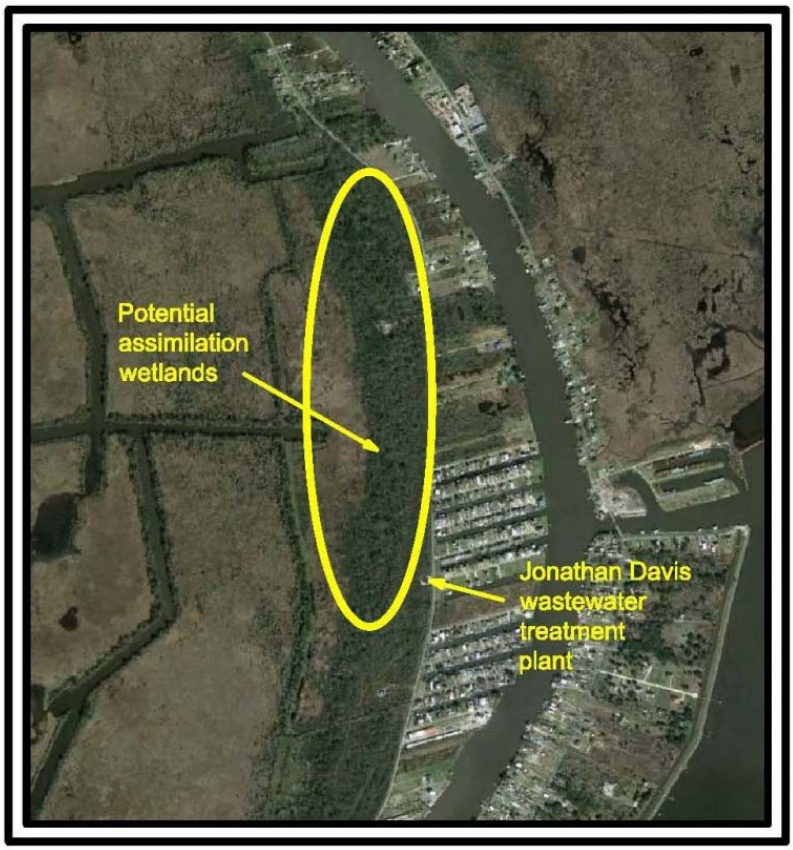

Figure 3 – Assimilation Wetland Location Map

An ecological baseline study was conducted for the project area. The study, entitled "Ecological Baseline Study for the Jonathan Davis Assimilation Wetland, Jefferson Parish, Louisiana"[3], measured the ecological baseline conditions in the wetlands near the location of proposed discharge. One part of the study calculated nutrient loading rates and estimated removal efficiencies. The study states that nutrient loading rates for wetland assimilation projects in Louisiana are kept at or below 15 and 4 $g/m^2/yr$ for total nitrogen (TN) and total phosphorous (TP), respectively, to ensure high nutrient removal efficiency.

The forested wetlands northwest of the Jonathan Davis WWTP are degraded with low productivity and contain invasive species as shown from the Ecological Baseline Study. The study states that without any management action, most of the trees will die within a relatively short period of time. Inputs of freshwater and nutrients, along with plantings of bald cypress seedlings, will greatly improve these wetlands. Using a potential assimilation wetland area of 40 ha the estimated nutrient loading post project was calculated to be 13 $g/m^2/yr$ TN and 2.6 $g/m^2/yr$ TP. With this loading rate, a reduction of 65-85% of TN and 60-80% of TP could be expected. The following table gives the nutrient loading rates and estimated removal efficiencies that could be expected if the project was to be constructed as proposed. Predicted nutrient loading rates and estimated removal efficiencies from introduction of secondarily-treated wastewater effluent from Jonathan Davis WWTP are shown in Table 3.

Table 3 – Nutrient loading rates and estimated removal efficiencies.

	45 hectares (11 acres)	
	Total Nitrogen	Total Phosphorous
Discharge (MGD)	0.25	0.25
Nutrient Conc. (mg/L)	10	3
Loading Rate (g/m2/yr)	8.6	2.6
Predicted Reduction	70-90%	60-80%

Source: Comite Resources, Inc.[3]

The study recommends that the proposed design of the new treatment plant and discharge to the nearby wetlands to be implemented. It concludes that the forested wetlands are severely stressed, and that the trees will die in a few years if no action is taken. The study states that an input of freshwater nutrients from the wastewater discharge, along with planting bald cypress seedlings is crucial for the revitalization of the surrounding wetland.

The estimated construction cost of Project 2 is $190,000.

References

1. US Department of Energy, Premium Efficiency Motor Selection and Application Guide, DOE/GO-102014-4107, February 2014.
2. California Energy Commission, Water/Wastewater Process Energy, Variable-Frequency Drive, 2003.
3. Comite Resources, Inc., *Ecological Baseline Study for the Jonathan Davis Assimilation Wetland, Jefferson Parish, LA*, March 2014.