GENERAL ABBREVIATIONS

AB	Anchor Bolt
BV	Ball Valve
BFV	Butterfly Valve
BG	Below Ground
BGS	Below Ground Surface
Bldg.	Building
BOP	Bottom of Pipe
Bot	Bottom
Cfs	Cubic Foot per Second
Ckt.	Circuit
℄	Center Line
Clr	Clear
Conc	Concrete
Cond	Conductor
CS	Carbon Steel (Schedule 40)
Cu Ft	Cubic Foot
CV	Check Valve
CY	Cubic Yard
DECON	Decontamination
Disch	Discharge
DNAPL	Dense Nonaqueous-Phase Liquid
DW	Double Walled
Dwg	Drawing
E	East
EF	Each Face
ELEV	Elevation
Eq	Equals
EW	Extraction Well, Each Way
EWP	Extraction Well Pump
Exist	Existing
FE	Flow Element
FQI	Flow Totalizer and Indicator
Fpm	Feet per Minute
Ft	Foot, Feet
Gal	Gallon
Gnd	Ground
Gpd	Gallon per Day
Gph	Gallon per Hour
Gpm	Gallon per Minute
GV	Gate Valve
Gw	Groundwater
H	High
HDPE	High Density Polyethylene
HH	High High
Hp	Horsepower
Hr	Hour
Horiz	Horizontal
HOA	Hand Off Automatic
HS	Hand Switch
Hwl	High Water Level
Ht	Height
ID	Inside Diameter
IE	Invert Elevation
In	Inch
Insul	Insulation
IW	Injection Well
L	Low
LAH	Level Alarm High
Lb	Pounds
LE	Level Element
LI	Level Indicator
LIT	Level Indicator Transmitter
LNAPL	Light Nonaqueous-Phase Liquid
LSH	Level Switch High
LIC	Level Indicator and Controller
LT	Level Transmitter
LWL	Low Water Level
M	Motor
ma	Milliampere
Max	Maximum
MCW	Madisonville Creosote Works
Mftr	Manufacturer
MGD	Million Gallon per Day
Mh	Manhole
Min	Minimum
MS	Mild Steel
MW	Monitoring Well
N	North
NA	Not Applicable or Not Available
NAPL	Nonaqueous-Phase Liquid
NC	Normally Closed
NGVD	National Geodetic Vertical Datum
No.	Number
NO	Normally Open
NTS	Not to Scale
OC	On Center
OD	Outside Diameter
OWS	Oil-Water Separator
P	Pole
PC	Pressure Controller
PAL	Pressure Alarm Low
Pe	Polyethylene
PFD	Process Flow Diagram
P&ID	Piping and Instrumentation Diagram
P&I	Piping and Instrumentation
PI	Pressure Indicator
PPB	Part per Billion
PS	Pressure Switch
PSL	Pressure Switch Low
PSI, PSIG	Pound per Square Inch (Gage)
PVC	Polyvinyl Chloride Pipe
PW	Pumping Well
R	Radius
RCP	Reinforced Concrete Pipe
Reg	Regulator
Reinf	Reinforce, Reinforcement
Reqd	Required
RPM	Revolutions Per Minute
RGS	Rigid Galvanized Steel
S	South
SCH	Schedule
SD	Storm Drain
Sec	Second
SF	Square Feet
SH22	Louisiana State Highway 22
Sht	Sheet
SM	Static Mixer
Sq	Square
SS	Service Switch, Stainless Steel
Sta	Station
Stl	Steel
SV	Sample Valve
SW	Socket Weld
T	Tank
T & B	Top and Bottom
TBD	To Be Determined
TBM	Temporary Benchmark
TD	Thermal Desorption
THK	Thick
Thr'd	Threaded
TOC	Top of Curb
TOG	Top of Grade
TOS	Top of Slab
TOSt	Top of Steel
TOW	Top of Wall
Typ	Typical
UNO	Unless Noted Otherwise
Vert	Vertical
W	W-Shape, Width, Water Line, West
W/	With
WC	Water Column
WS	Water Surface
WWTP	Wastewater Treatment Plant
VFD	Variable Frequency Drive

DETAIL AND SECTION DESIGNATIONS

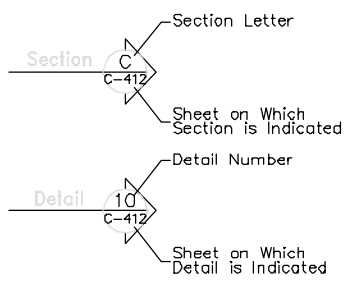

ELECTRICAL SYMBOLS

- Lighting Fixture Symbol Type and Control
- Fluorescent Light Fixture
- Panel Board
- Control Panel
- Switch Board
- Watt-Hour Meter and Socket
- Elapsed Time Meter
- Hand-Off-Auto Selector Switch
- Hand-Off-Remote Selector Switch
- Lock-Off-Stop Selector Switch
- Transformer
- Control Power Transformer
- Current Transformer
- Meter and Current Transformer
- Selector Switch
- Time Delay Relay
- Latching Relay
- Control Relay
- Single-Pole Toggle Switch
- Duplex Convenience Outlet
- Circuit Breaker Operating Handle
- Motor, Horsepower Size Noted
- Motor Starter Contactor Coil
- Disconnect Switch
- Concrete Encased Conduit
- Conduit To Be Concealed under Floor or Underground
- Conduit To Be Installed Exposed
- Handhole
- Ground
- Lightning Arrester
- Telephone Jack
- Conduit and Wire Identification Tag
- Nameplate
- Line Number
- Aboveground Pullbox/Junction Box
- Junction Box and/or Outlet
- Field Connection Terminal Block
- Contact Normally Open
- Contact Normally Closed
- Overload Device Contact
- Overload Device Heat Element
- Pressure Transducer
- Float Switch
- Pressure Switch
- Disconnect Switch
- Push Button, Normally Open or Momentarily Closed
- Push Button, Normally Closed or Momentarily Open
- Diffuser
- Single-Unit Pushbutton Station
- Two-Unit Pushbutton Station
- Three-Unit Pushbutton Station

INSTRUMENTATION SYMBOLS

- Field Device
- Programmable Logic Controller Function Not Normally Accessible
- Instrument Mounted on Field Panel
- Instrument Mounted on Main Control Panel
- Programmable Logic Controller Function Normally Accessible

VALVES

NORMALLY OPEN	VALVE TYPE
	Gate
	Butterfly
	Ball
	Check
	Pressure Relief Valve
	Sampling Valve
S	Two Way Solenoid Valve Single Coil
	Hand Actuator
	Pressure Reducing Actuator
M	Modulating Electric Actuator

* Valves Shown Solid Are Normally Closed

MECHANICAL SYMBOLS

- Pump
- Blower
- Flanged Connection
- Flexible Connection
- Dresser Coupling
- Quick Connect
- Air Lift Pump
- Line Number

PFD AND P&ID LINES

- Electric Analog Signal
- Electric Binary Signal
- Pneumatic Signal
- Process Line
- Hose
- Well Symbol (PW-)
- Cap
- Screwed Concentric Reducer
- Screwed Connecting Joint
- Quick Connect Union

P & I DIAGRAM INSTRUMENT IDENTIFICATION

CODE LETTER	FIRST LETTER(S)		SUCCEEDING LETTER(S)		
	MEASURED OR INITIATING VARIABLE	MODIFIER	READOUT OR PASSIVE FUNCTION	OUTPUT FUNCTION	MODIFIER
A			Alarm		
C				Control	
E	Voltage		Element		
F	Flow				
G	Gauging				
H	Hand				
I	Current		Indicate		
J	Power				High
L	Level		Light		
P	Pressure				Low
Q		Totalize			
R			Record		
S				Switch	
T	Temperature			Transmit	
V				Valve	

GENERAL SYMBOLS

SYMBOL	DESCRIPTION	SYMBOL	DESCRIPTION
	Water Surface Elevation	—SD—	Buried Storm Drain
	Undisturbed Soil	—SS—	Buried Sanitary Sewer
	Cement Grout	— E —	Buried Electrical Line
	Concrete	— T —	Buried Telephone Line
	Concrete to be Removed	— OHE · PP · —	Overhead Electric
	Concrete Masonry Unit	—GAS—GAS—	Buried Gas
	Gravel	GW	Existing Ground water Line
	Fill Material	GW	New Ground water Line
	Sand		Existing Contour Line
	Bentonite		New Contour Line
—x—x—	Chain Link Fence		Survey Point
	Joint Sealer	MH	Manhole
		Ø	Diameter
		BM	Benchmark

GENERAL NOTES

1. The contractor is directed to the contract specifications for the specifications in their entirety. Where conflicts exist between these drawings and the specifications, the specifications shall prevail.
2. Locations of existing utilities and structures are from the best information available. Exact locations and completeness are not guaranteed. Underground facilities should be located and marked in the field prior to the start of construction.
3. Drawings are intended to cover layout and design of work. Do not scale for exact measurements.

REVISIONS

REV.	DATE	DRWN	CHKD	REMARKS
1	6/25/01	T.E.P.	T.J.O.	AS-BUILT CONSTRUCTION
1	8/04/01	T.E.P.	M.D.W.	REVISED AS-BUILT CONSTRUCTION (WWTP MODIFICATIONS)

Tetra Tech EM Inc.

DESIGNED BY: R.F. | DRAWN BY: R.T.F. | CHECKED BY: R.F.

RE-CHECKED BY: T.J.O. | APPROVED BY: T.J.O. | DATE: 9/28/98

ELECTRONIC COPY OF ORIGINAL DOCUMENT. NOT TO BE USED FOR CONSTRUCTION BIDDING. RECORDATION, CONVEYANCE, SALES, OR AS THE BASIS FOR THE ISSUANCE OF A PERMIT.

TIMOTHY J. OLIVER
LA. P.E. # 28068
6/04/01
TETRA TECH EM INC.

MADISONVILLE CREOSOTE WORKS
MADISONVILLE, ST. TAMMANY, LOUISIANA

Symbols, Abbreviations, and General Notes

EPA

WORK ASSIGNMENT NO.: 026-RA-RA-06AJ

DRAWING NO.: G-2

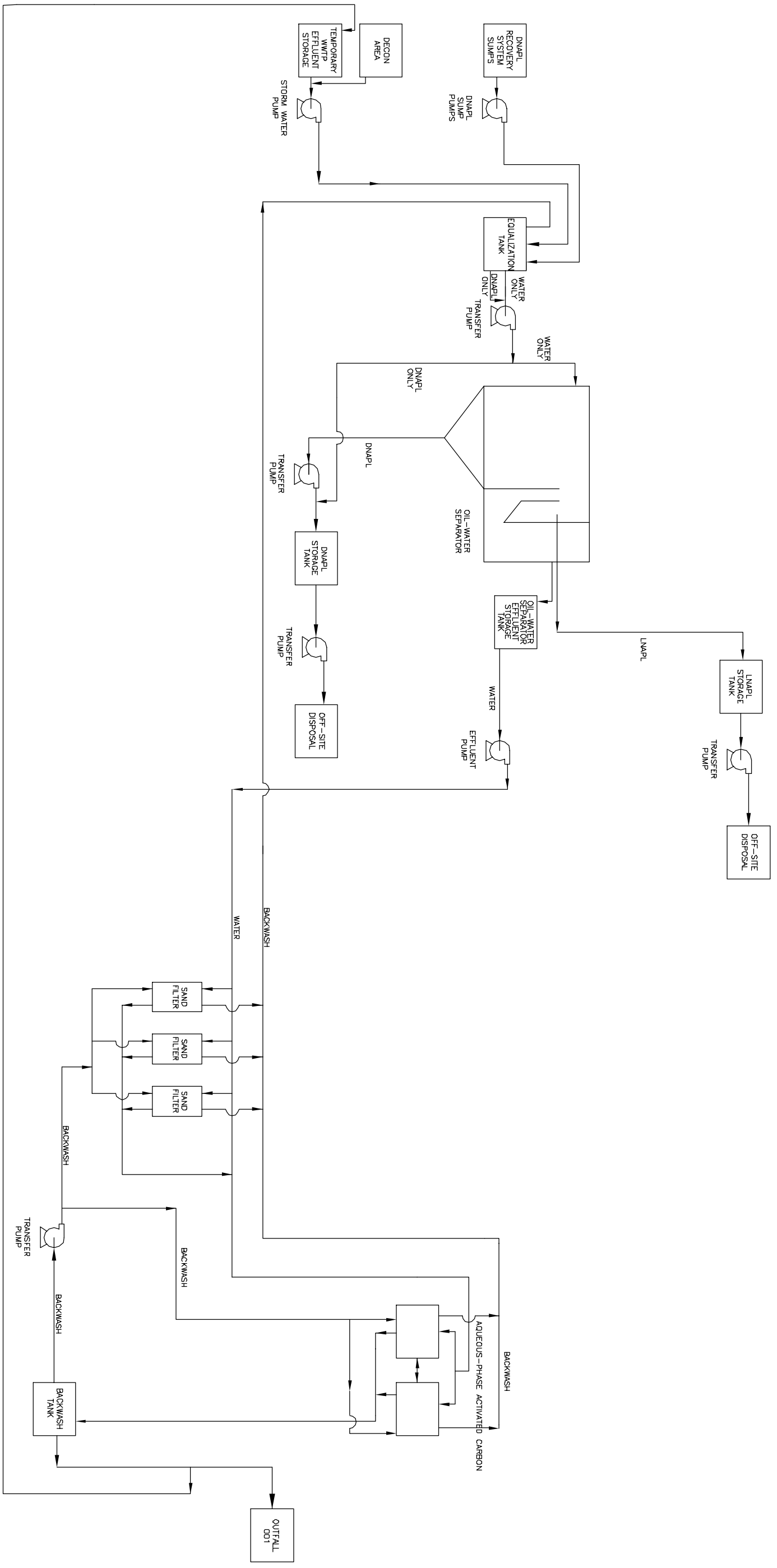

MADISONVILLE CREOSOTE WORKS
MADISONVILLE, ST. TAMMANY, LOUISIANA

PROCESS FLOW DIAGRAM
DNAPL Recovery System
and Wastewater Treatment Plant

ELECTRONIC COPY OF ORIGINAL DOCUMENT. NOT TO BE USED FOR CONSTRUCTION, BIDDING, RECORDATION, CONVEYANCE, SALES, OR AS THE BASIS FOR THE ISSUANCE OF A PERMIT.

TIMOTHY J. OLIVER
LA. P.E. # 28065
6/04/01
TETRA TECH EM INC.

Tetra Tech EM Inc.

DESIGNED BY: R.F.
DRAWN BY: R.T.F.
CHECKED BY: H.A.G.
RE-CHECKED BY: T.J.O.
APPROVED BY: T.J.O.
DATE: 9/28/98

WORK ASSIGNMENT NO.: 026-RA-RA-06AJ
DRAWING NO.: M-2

REV.	DATE	DRWN	CHKD	REMARKS
1	5/25/00	TEP	TJO	AS-BUILT CONSTRUCTION
2	6/04/01	JSR	TJO	REVISED AS-BUILT CONSTRUCTION (WWTP MODIFICATIONS)

REVISIONS

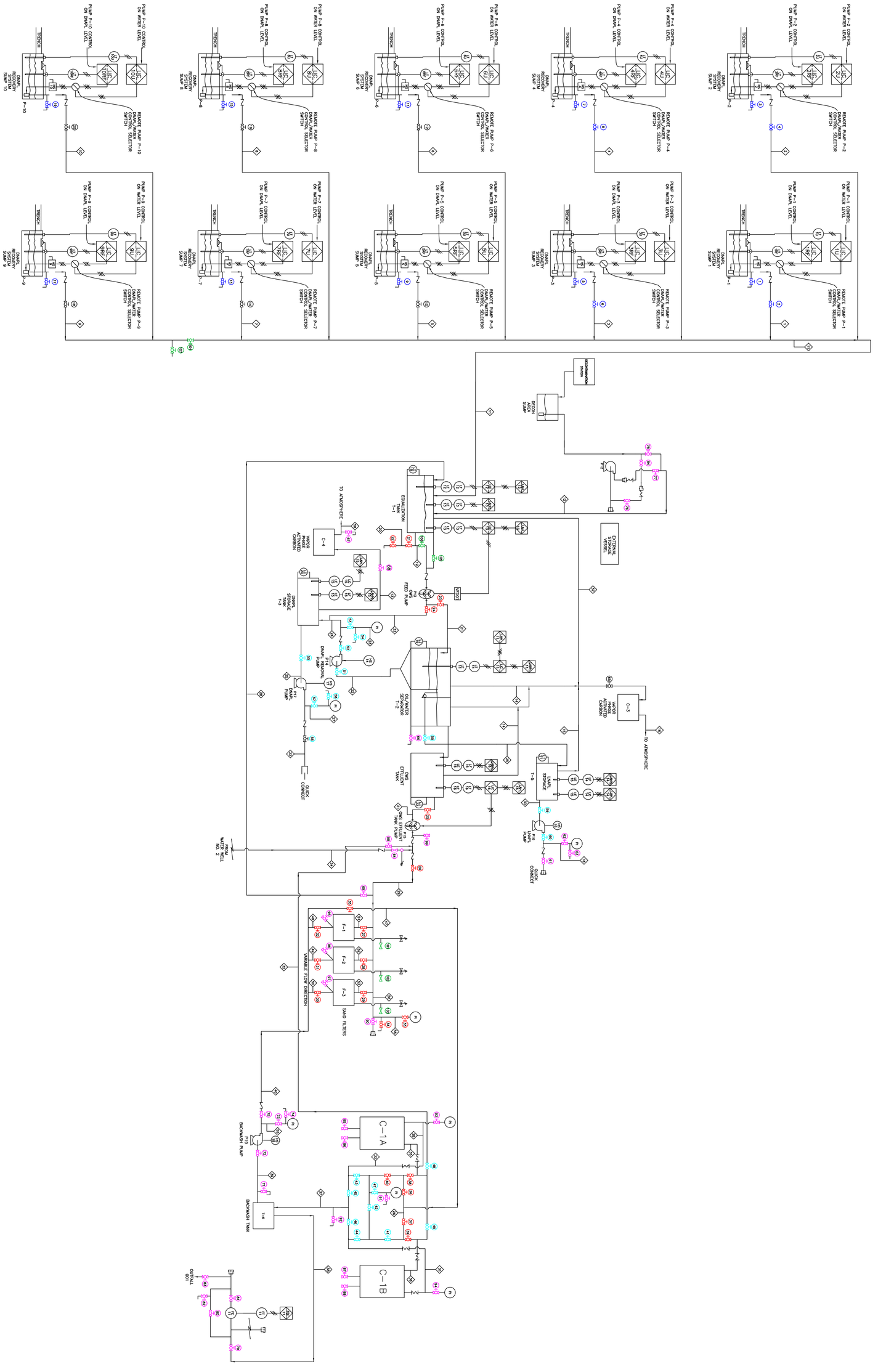

1	5/25/00	T.E.P.	T.J.O.	AS-BUILT CONSTRUCTION
2	6/04/01	T.E.P.	T.J.O.	REVISED AS-BUILT CONSTRUCTION (WWTP MODIFICATIONS)
REV.	DATE	DRWN	CHKD	REMARKS

REVISIONS

DRAWING NO: M-3

WORK ASSIGNMENT NO.: 026-RA-RA-06AJ

EPA

MADISONVILLE CREOSOTE WORKS
MADISONVILLE, ST. TAMMANY, LOUISIANA

PIPING AND INSTRUMENTATION DIAGRAM
DNAPL Recovery System and Wastewater Treatment Plant

ELECTRONIC COPY OF ORIGINAL DOCUMENT. NOT TO BE USED FOR CONSTRUCTION, BIDDING, RECORDATION, CONVEYANCE, SALES, OR AS THE BASIS FOR THE ISSUANCE OF A PERMIT.
TIMOTHY J. OLIVER
LA. P.E. # 28068
6/04/01
TETRA TECH EM INC.

Tetra Tech EM Inc.

DESIGNED BY: R.F.
DRAWN BY: R.T.F.
CHECKED BY: M.S.Z.
RE-CHECKED BY: T.J.O.
APPROVED BY: T.J.O.
DATE: 9/28/98

Equipment List

Equipment ID	Equipment Description	Specification
T-1	Equalization Tank	8'x10'x9' high, 5000 gal., CS
T-2	Oil-Water Separator	150 gpm, CS
T-3	DNAPL Storage Tank	4' diameter x 10' long horizontal, 940 gal., CS
T-5	LNAPL Storage Tank	3' diameter x 5' long horizontal, 250 gal., CS
T-6	Backwash Tank	6' diameter x 9' vertical, 1700 gal., CS
T-7	Oil-Water Separator Effluent Tank	4' diameter x 6' horizontal, 560 gal., CS
C-1A	Liquid-Phase Activated Carbon Bed 1A	4' diameter x 8' tall, 2000 lb, 75 psig
C-1B	Liquid-Phase Activated Carbon Bed 1B	4' diameter x 8' tall, 2000 lb, 75 psig
C-3	Vapor-Phase Activated Carbon Bed 3	55 gallon drum - 200 lb of Activated Carbon
C-4	Vapor-Phase Activated Carbon Bed 4	55 gallon drum - 200 lb of Activated Carbon
F-1	Sand Filter F-1	4' diameter, sand, 2' bed depth
F-2	Sand Filter F-2	4' diameter, sand, 2' bed depth
F-3	Sand Filter F-3	4' diameter, sand, 2' bed depth

Pump List

Pump ID	Pump Description	Specification	Operation	VFD
P-1	DNAPL Recovery System Pump #1	Progressive cavity, motor type L2-5	HOA	NO
P-2	DNAPL Recovery System Pump #2	Progressive cavity, motor type L2-5	HOA	NO
P-3	DNAPL Recovery System Pump #3	Progressive cavity, motor type L2-5	HOA	NO
P-4	DNAPL Recovery System Pump #4	Progressive cavity, motor type L2-5	HOA	NO
P-5	DNAPL Recovery System Pump #5	Progressive cavity, motor type L2-5	HOA	NO
P-6	DNAPL Recovery System Pump #6	Progressive cavity, motor type L2-5	HOA	NO
P-7	DNAPL Recovery System Pump #7	Progressive cavity, motor type L2-5	HOA	NO
P-8	DNAPL Recovery System Pump #8	Progressive cavity, motor type L2-5	HOA	NO
P-9	DNAPL Recovery System Pump #9	Progressive cavity, motor type L2-5	HOA	NO
P-10	DNAPL Recovery System Pump #10	Progressive cavity, motor type L2-5	HOA	NO
P-12	Decontamination Area Sump Extraction Pump	Horizontal centrifugal 150 gpm @ 30' TDH, mator type L2-3	HO	NO
P-13	OWS Feed Pump	Rotary Labe Positive Displacement 75 gpm @ 12' TDH, motor type L2-3EP	HOA	VFD-01
P-14	DNAPL Removal Pump	Horizontal centrifugal 5 gpm @ 10' TDH, SS,, motor type L2-3	HOA	NO
P-15	OWS Effluent Outlet Pump	Rotary Labe Positive Displacement 75 gpm @ 25' TDH, motor type L2-3EP	HOA	NO
P-16	LNAPL Pump	Horizontal centrifugal 20 gpm @ 20' TDH, SS, , motor type L2-3	HO	NO
P-17	DNAPL Pump	Horizontal centrifugal 20 gpm @ 20' TDH, SS,, motor type L2-3	HO	NO
P-19	Sand Filter Backwash Pump	Horizontal centrifugal 150 gpm @ 30' TDH, CI, , motor type L2-3	HO	NO
P-21	Vault No. 1 Sump Pump	Submersible centrifugal 10 gpm @ 20' TDH	Float	NO
P-22	Vault No. 2 Sump Pump	Submersible centrifugal 10 gpm @ 20' TDH	Float	NO
P-23	Vault No. 3 Sump Pump	Submersible centrifugal 10 gpm @ 20' TDH	Float	NO
P-24	Vault No. 4 Sump Pump	Submersible centrifugal 10 gpm @ 20' TDH	Float	NO
P-25	Vault No. 5 Sump Pump	Submersible centrifugal 10 gpm @ 20' TDH	Float	NO

Level Meter List

Meter ID	Meter Description	Specification
LE/LT-1U	Water Level Meter, Riser #1	Ultrasonic, continuous level meter 4-20 mA output, 1 level (Water, Air Interface)
LE/LT-2U	Water Level Meter, Riser #2	Ultrasonic, continuous level meter 4-20 mA output, 1 level (Water, Air Interface)
LE/LT-3U	Water Level Meter, Riser #3	Ultrasonic, continuous level meter 4-20 mA output, 1 level (Water, Air Interface)
LE/LT-4U	Water Level Meter, Riser #4	Ultrasonic, continuous level meter 4-20 mA output, 1 level (Water, Air Interface)
LE/LT-5U	Water Level Meter, Riser #5	Ultrasonic, continuous level meter 4-20 mA output, 1 level (Water, Air Interface)
LE/LT-6U	Water Level Meter, Riser #6	Ultrasonic, continuous level meter 4-20 mA output, 1 level (Water, Air Interface)
LE/LT-7U	Water Level Meter, Riser #7	Ultrasonic, continuous level meter 4-20 mA output, 1 level (Water, Air Interface)
LE/LT-8U	Water Level Meter, Riser #8	Ultrasonic, continuous level meter 4-20 mA output, 1 level (Water, Air Interface)
LE/LT-9U	Water Level Meter, Riser #9	Ultrasonic, continuous level meter 4-20 mA output, 1 level (Water, Air Interface)
LE/LT-10U	Water Level Meter, Riser #10	Ultrasonic, continuous level meter 4-20 mA output, 1 level (Water, Air Interface)
LE/LT-11	DNAPL Level Meter, DNAPL Chamber-OWS	RF, continuous level meter 4-20 mA output 1 level (DNAPL/Water Interface)
LE/LT-12	DNAPL Level Meter, Equalization Tank T-1	RF, continuous level meter 4-20 mA output 1 level (DNAPL/Water Interface)
LE/LT-13	Water Level Meter, Equalization Tank	Ultrasonic, continuous level meter 4-20 mA output, 1 level (Water, Air Interface)
LE/LC-14	Level Probe, LNAPL Storage Tank	RF admittance contact probe, one station (high)
LE/LC-15	Level Probe, DNAPL Storage Tank	RF admittance contact probe, one station (high)
LE/LT-16	Level Meter, OWS Effluent Tank	Ultrasonic, continuous level meter 4-20 mA output, 1 level (Water, Air Interface)
LE/LT-1RF	DNAPL Level Meter, Riser #1	RF, continuous level meter 4-20 mA output 1 level (DNAPL/Water Interface)
LE/LT-2RF	DNAPL Level Meter, Riser #2	RF, continuous level meter 4-20 mA output 1 level (DNAPL/Water Interface)
LE/LT-3RF	DNAPL Level Meter, Riser #3	RF, continuous level meter 4-20 mA output 1 level (DNAPL/Water Interface)
LE/LT-4RF	DNAPL Level Meter, Riser #4	RF, continuous level meter 4-20 mA output 1 level (DNAPL/Water Interface)
LE/LT-5RF	DNAPL Level Meter, Riser #5	RF, continuous level meter 4-20 mA output 1 level (DNAPL/Water Interface)
LE/LT-6RF	DNAPL Level Meter, Riser #6	RF, continuous level meter 4-20 mA output 1 level (DNAPL/Water Interface)
LE/LT-7RF	DNAPL Level Meter, Riser #7	RF, continuous level meter 4-20 mA output 1 level (DNAPL/Water Interface)
LE/LT-8RF	DNAPL Level Meter, Riser #8	RF, continuous level meter 4-20 mA output 1 level (DNAPL/Water Interface)
LE/LT-9RF	DNAPL Level Meter, Riser #9	RF, continuous level meter 4-20 mA output 1 level (DNAPL/Water Interface)
LE/LT-10RF	DNAPL Level Meter, Riser #10	RF, continuous level meter 4-20 mA output 1 level (DNAPL/Water Interface)
LE/LF-13	Point Level Switch - Equalization Tank T-1	Magnetic reed float switch, one station (high-high)
LE/LF-14	Point Level Switch - LNAPL Storage Tank	Magnetic reed float switch, one station (high-high)
LE/LF-15	Point Level Switch - DNAPL Storage Tank	Magnetic reed float switch, one station (high-high)
LE/LF-16	Point Level Switch - Oil Water Separator Effluent Tank	Magnetic reed float switch, one station (high-high)

Flow Meter List

Meter ID	Meter Description	Specification
FE/FT-11	Flow Element/Flow Transmitter-Outfall 001	Magnetic flowmeter, 4-20 mA output

Variable Frequency Drive

Meter	Meter Description	Specification
VFD 01	Variable Frequency Drive - OWS Feed Pump	Variable frequency drive

Line Specification List

Line #	Diameter	Materials of Construction	Specification	Flow Rate
1	1"	SS		2 gpm
2	1"	SS		2 gpm
3	1"	SS		2 gpm
5	1"	SS		2 gpm
6	1"	SS		2 gpm
7	1"	SS		2 gpm
8	1"	SS		2 gpm
9	1"	SS		2 gpm
10	1"	SS		2 gpm
11	3"/6"	SS/PVC	DW pipe	20 gpm
12	3"	SS		20 gpm
13	2"	HDPE		20 cfm
14	2"	HDPE		20 cfm
15	2"	HDPE		20 cfm
16	2"	HDPE		20 cfm
17	Temporary Hose Removed			
18	1/2"	SS	Tubing	
19	3"	SS		150 gpm
20	1/2"	SS	Tubing	
21	3"	SS		150 gpm
22	2"	SS		5 gpm
23	1/2"	SS	Tubing	
24	2"	SS		5 gpm
25	2"	SS		5 gpm
26	3"	SS/HDPE	SW pipe transition	150 gpm
27	1/2"	SS	Tubing	
28	3"	HDPE	Hose	150 gpm
29	3"	SS		150 gpm
30	2"	SS		20 gpm
31	3"	HDPE	Hose	150 gpm
32	3"	SS		150 gpm
33	2"	SS		30 gpm
34	Deleted			
35	3"	HDPE	Hose	150 gpm
36	3"	HDPE	Hose	150 gpm
37	3"	HDPE		150 gpm
38	3"	SS/HDPE	SW pipe transition	150 gpm
39	2"	SS		150 gpm
40	3"	SS		150 gpm
41	Deleted			
42	Deleted			
43	Deleted			
44	Deleted			
45	Deleted			
46	Deleted			
47	3"	HDPE		150 gpm
48	3"	SS		150 gpm
49	3"	SS		150 gpm
50	3"	SS		150 gpm
51	3"	SS		150 gpm
52	3"	SS		150 gpm
53	3"	SS		150 gpm
54	Deleted			
55	1/2"	SS	Tubing	
56	1/2"	SS	Tubing	
57	2"	HDPE		20 cfm
58	2"	HDPE		20 cfm

REVISIONS

REV.	DATE	DRWN	REMARKS
1	5/25/00	T.E.P.	T.J.O. AS-BUILT CONSTRUCTION
2	8/04/01	M.S.W.	T.J.O. REVISED AS-BUILT CONSTRUCTION (WWTP MODIFICATIONS)

Tetra Tech EM Inc.

DESIGNED BY: R.F. RE-CHECKED BY: T.J.O.
DRAWN BY: R.T.F. APPROVED BY: T.J.O.
CHECKED BY: M.S.Z. DATE: 9/28/98

ELECTRONIC COPY OF ORIGINAL DOCUMENT. NOT TO BE USED FOR CONSTRUCTION PURPOSES. RECORDATION. CONVEYANCE, SALES, OR AS THE BASIS FOR THE ISSUANCE OF A PERMIT.

TIMOTHY J. OLIVER
LA. P.E. # 28068
6/04/01
TETRA TECH EM INC.

MADISONVILLE CREOSOTE WORKS
MADISONVILLE, ST. TAMMANY, LOUISIANA

DETAILS
Equipment, Instrumentation and Line Specifications List

EPA

WORK ASSIGNMENT NO.:
026-RA-RA-06AJ

DRAWING NO.:
M-4

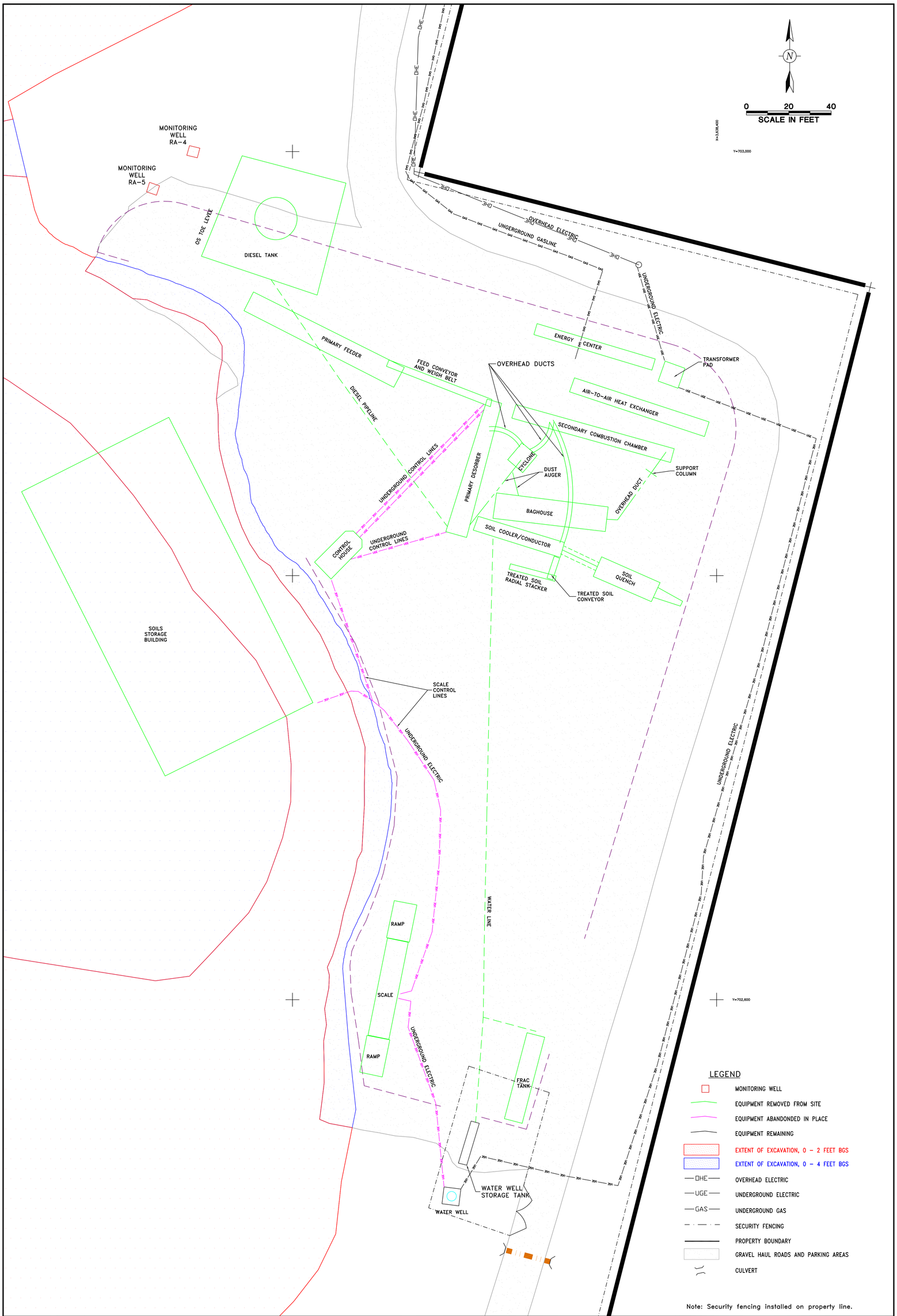

Note: Security fencing installed on property line.

DRAWING NO.: C-14

WORK ASSIGNMENT NO.: 026-RA-RA-06AJ

EPA

MADISONVILLE CREOSOTE WORKS
MADISONVILLE, ST. TAMMANY, LOUISIANA

DETAILS, PLAN VIEW
Eastern Portion of Property
Thermal Treatment Plant

ELECTRONIC COPY OF ORIGINAL DOCUMENT. NOT TO BE USED FOR CONSTRUCTION, BIDDING, RECORDATION, CONVEYANCE, SALES, OR AS THE BASIS FOR THE ISSUANCE OF A PERMIT.
TIMOTHY J. OLIVER
LA. P.E. # 28068
5/25/00
TETRA TECH EM INC.

Tetra Tech EM Inc.

DESIGNED BY: H.A.G.
DRAWN BY: R.T.F.
CHECKED BY: D.A.R.
RE-CHECKED BY: T.J.O.
APPROVED BY: T.J.O.
DATE: 9/28/98

REV.	DATE	DRWN	CHKD	REMARKS
1	5/25/00	JFS	TJO	AS-BUILT CONSTRUCTION

REVISIONS

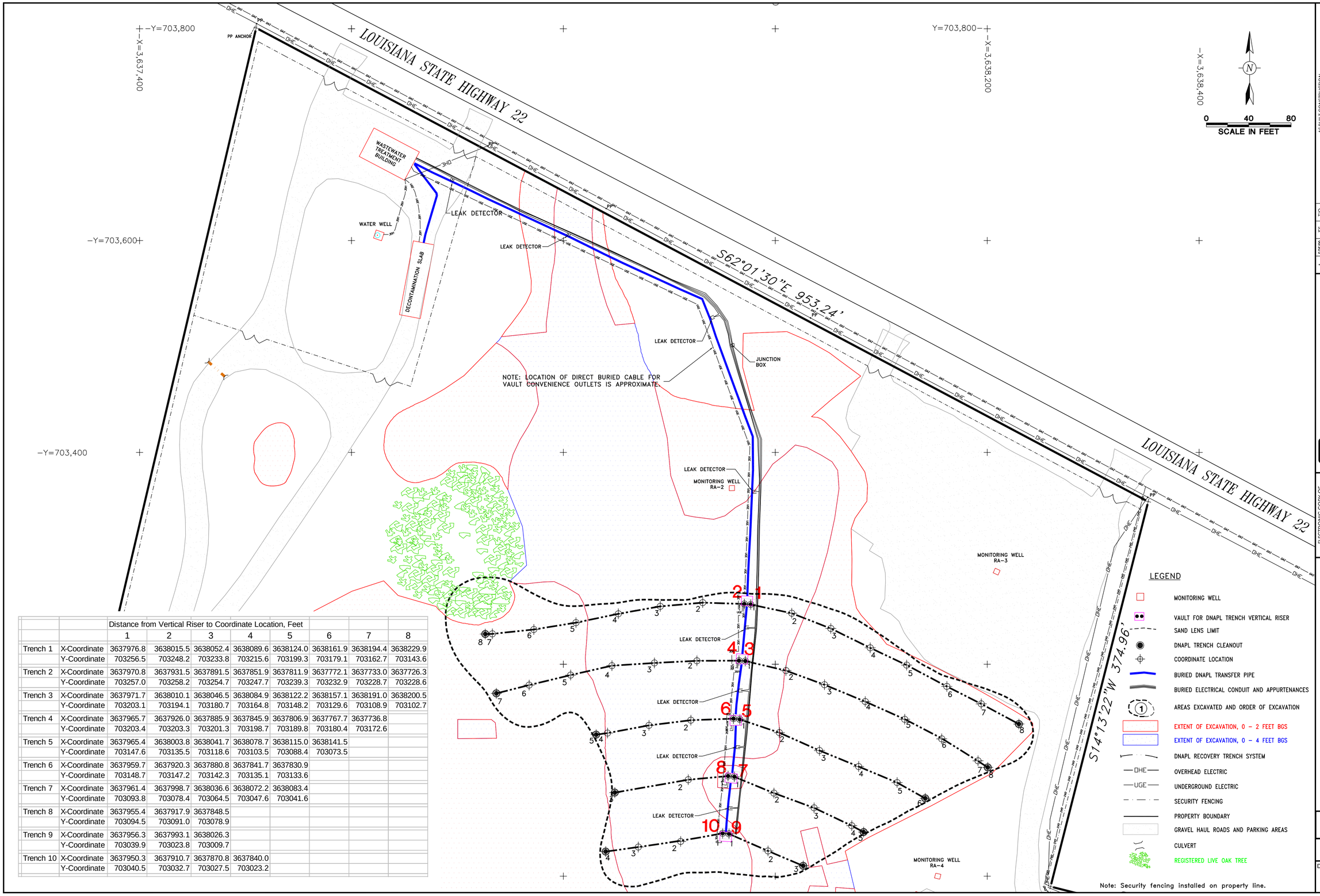

		Distance from Vertical Riser to Coordinate Location, Feet							
		1	2	3	4	5	6	7	8
Trench 1	X-Coordinate	3637976.8	3638015.5	3638052.4	3638089.6	3638124.0	3638161.9	3638194.4	3638229.9
	Y-Coordinate	703256.5	703248.2	703233.8	703215.6	703199.3	703179.1	703162.7	703143.6
Trench 2	X-Coordinate	3637970.8	3637931.5	3637891.5	3637851.9	3637811.9	3637772.1	3637733.0	3637726.3
	Y-Coordinate	703257.0	703258.2	703254.7	703247.7	703239.3	703232.9	703228.7	703228.6
Trench 3	X-Coordinate	3637971.7	3638010.1	3638046.5	3638084.9	3638122.2	3638157.1	3638191.0	3638200.5
	Y-Coordinate	703203.1	703194.1	703180.7	703164.8	703148.2	703129.6	703108.9	703102.7
Trench 4	X-Coordinate	3637965.7	3637926.0	3637885.9	3637845.9	3637806.9	3637767.7	3637736.8	
	Y-Coordinate	703203.4	703203.3	703201.3	703198.7	703189.8	703180.4	703172.6	
Trench 5	X-Coordinate	3637965.4	3638003.8	3638041.7	3638078.7	3638115.0	3638141.5		
	Y-Coordinate	703147.6	703135.5	703118.6	703103.5	703088.4	703073.5		
Trench 6	X-Coordinate	3637959.7	3637920.3	3637880.8	3637841.7	3637830.9			
	Y-Coordinate	703148.7	703147.2	703142.3	703135.1	703133.6			
Trench 7	X-Coordinate	3637961.4	3637998.7	3638036.6	3638072.2	3638083.4			
	Y-Coordinate	703093.8	703078.4	703064.5	703047.6	703041.6			
Trench 8	X-Coordinate	3637955.4	3637917.9	3637848.5					
	Y-Coordinate	703094.5	703091.0	703078.9					
Trench 9	X-Coordinate	3637956.3	3637993.1	3638026.3					
	Y-Coordinate	703039.9	703023.8	703009.7					
Trench 10	X-Coordinate	3637950.3	3637910.7	3637870.8	3637840.0				
	Y-Coordinate	703040.5	703032.7	703027.5	703023.2				

REVISIONS

REV.	DATE	DRWN	CHKD	REMARKS
1	5/25/00	JFS	T/O	AS-BUILT CONSTRUCTION
1	6/04/01	JSR	T/O	REVISED AS-BUILT CONSTRUCTION (WWTP MODIFICATIONS)

Tetra Tech EM Inc.

DESIGNED BY: H.A.G.
DRAWN BY: R.T.F.
CHECKED BY: D.A.R.
RECHECKED BY: T.J.O.
APPROVED BY: T.J.O.
DATE: 9/28/98

ELECTRONIC COPY OF ORIGINAL DOCUMENT - NOT TO BE USED FOR CONSTRUCTION, BIDDING, RECORDATION, CONVEYANCE, SALES, OR AS THE BASIS FOR THE ISSUANCE OF A PERMIT.
TIMOTHY J. OLIVER
LA. P.E. # 28068
6/04/01
TETRA TECH EM INC.

MADISONVILLE CREOSOTE WORKS
MADISONVILLE, ST. TAMMANY, LOUISIANA

DETAILS, PLAN VIEW
Northern Portion of Property
DNAPL Recovery System and Wastewater Treatment Plant

EPA

WORK ASSIGNMENT NO.:
026-RA-RA-06AJ

DRAWING NO.:
C-15

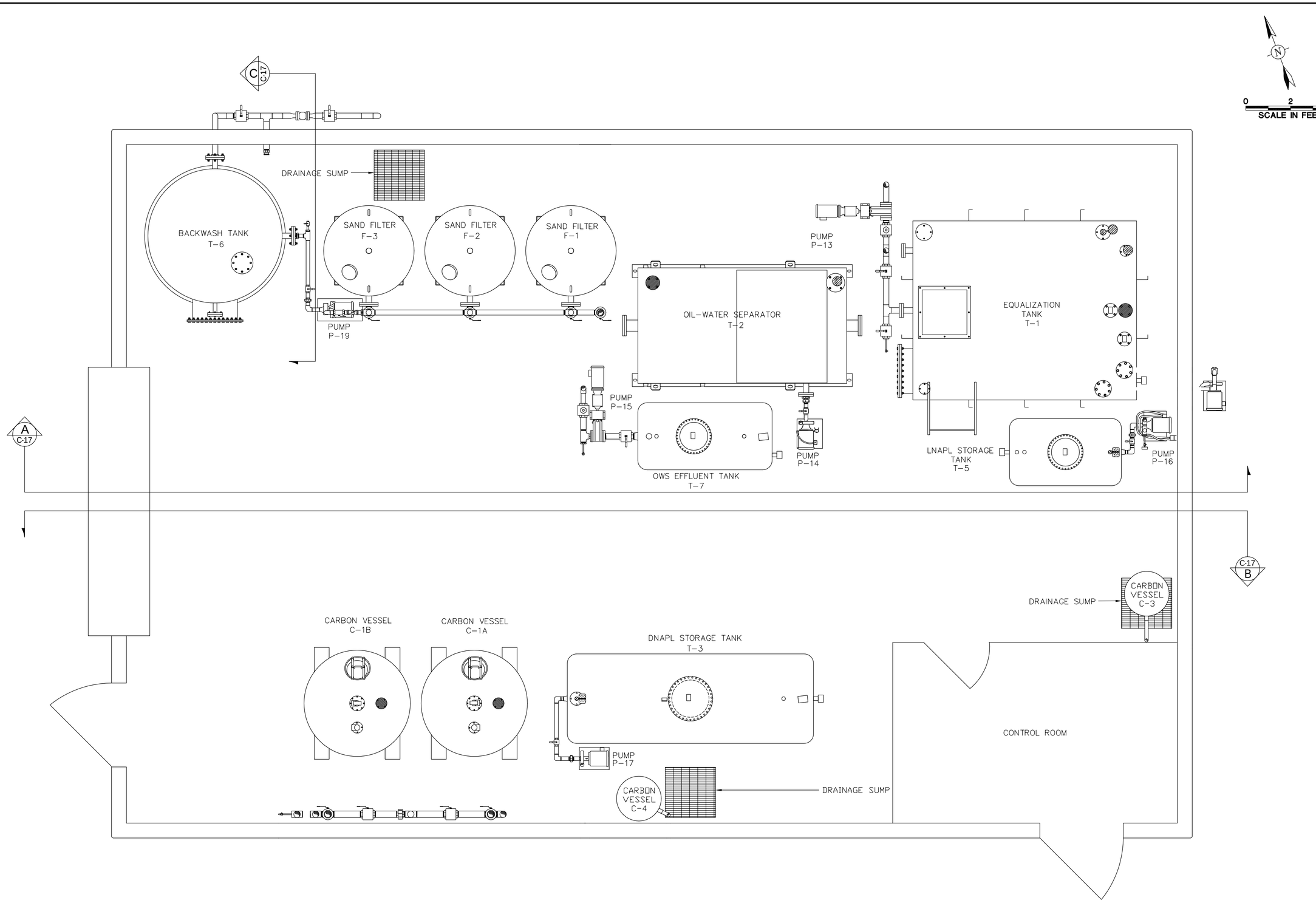

REV.	DATE	DRWN	CHKD	REMARKS
1	5/25/00	M.D.W.	T.J.O.	AS-BUILT CONSTRUCTION
2	6/04/01	M.D.W.	T.J.O.	REVISED AS-BUILT CONSTRUCTION (WWTP MODIFICATIONS)

REVISIONS

Tetra Tech EM Inc.

DESIGNED BY: H.A.G.
DRAWN BY: R.T.F.
CHECKED BY: R.T.F.
RE-CHECKED BY: T.J.O.
APPROVED BY: T.J.O.
DATE: 9/28/98

ELECTRONIC COPY OF ORIGINAL DOCUMENT - NOT TO BE USED FOR CONSTRUCTION, BIDDING, RECORDATION, CONVEYANCE, SALES, OR AS THE BASIS FOR THE ISSUANCE OF A PERMIT.
TIMOTHY J. OLIVER
LA. P.E. # 28068
6/04/01
TETRA TECH EM INC.

MADISONVILLE CREOSOTE WORKS
MADISONVILLE, ST. TAMMANY, LOUISIANA

DETAILS,
Wastewater Treatment Plant
Plan View, Lower Level

EPA

WORK ASSIGNMENT NO.:
026-RA-RA-06AJ

DRAWING NO.:
C-16A

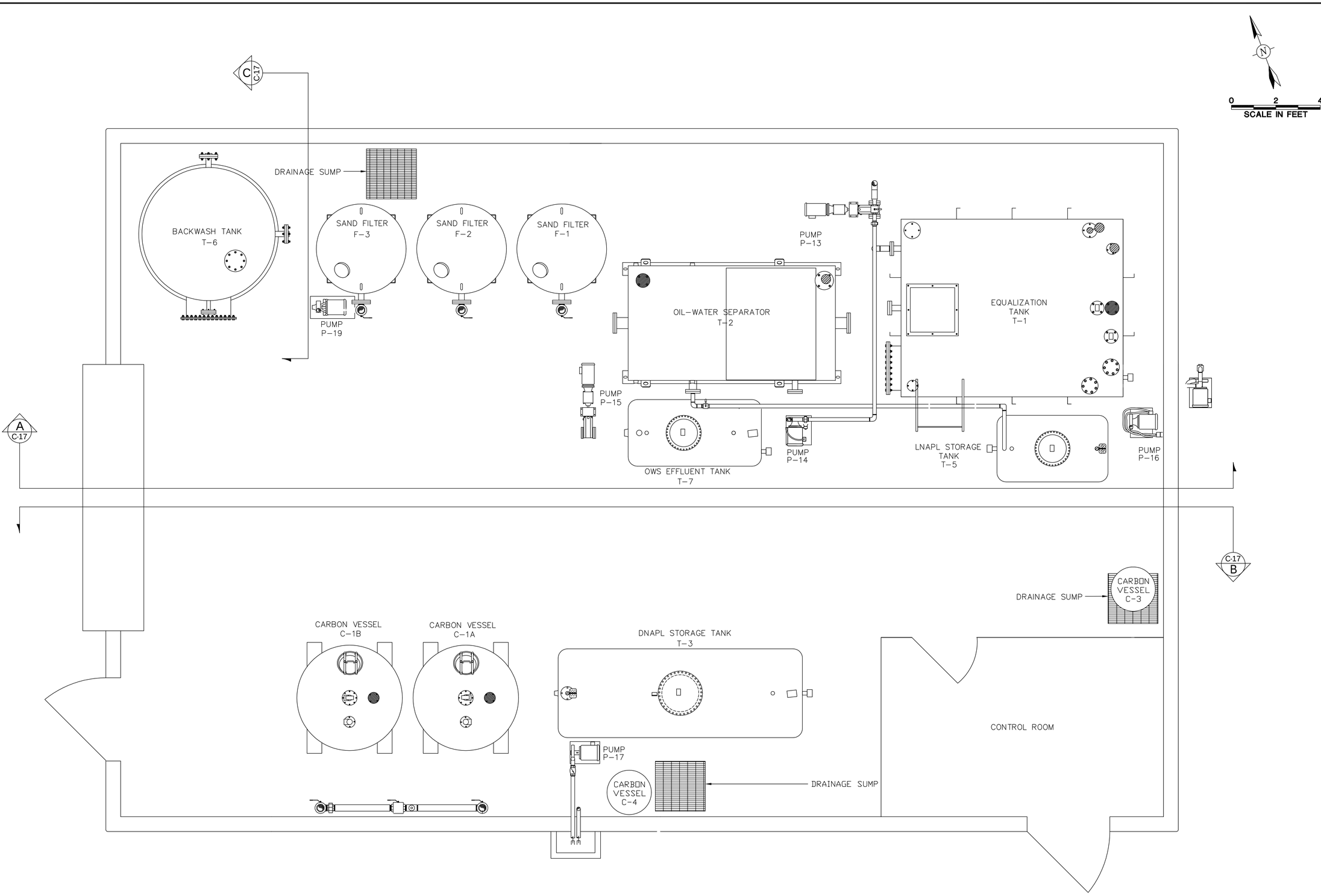

REVISIONS

REV.	DATE	DRWN	CHKD	REMARKS
1	5/25/00	M.D.W.	T.J.O.	AS-BUILT CONSTRUCTION
2	6/04/01	M.D.W.	T.J.O.	REVISED AS-BUILT CONSTRUCTION (WWTP MODIFICATIONS)

Tetra Tech EM Inc.

DESIGNED BY: H.A.G.
DRAWN BY: R.T.F.
CHECKED BY: R.T.F.
RECHECKED BY: T.J.O.
APPROVED BY: T.J.O.
DATE: 9/28/98

ELECTRONIC COPY OF ORIGINAL DOCUMENT - NOT TO BE USED FOR CONSTRUCTION, BIDDING, RECORDATION, CONVEYANCE, SALES, OR AS THE BASIS FOR THE ISSUANCE OF A PERMIT.
TIMOTHY J. OLIVER
LA. P.E. # 28068
6/04/01
TETRA TECH EM INC.

MADISONVILLE CREOSOTE WORKS
MADISONVILLE, ST. TAMMANY, LOUISIANA

DETAILS,
Wastewater Treatment Plant
Plan View, Middle Level

EPA

WORK ASSIGNMENT NO.:
026-RA-RA-06AJ

DRAWING NO.:
C-16B

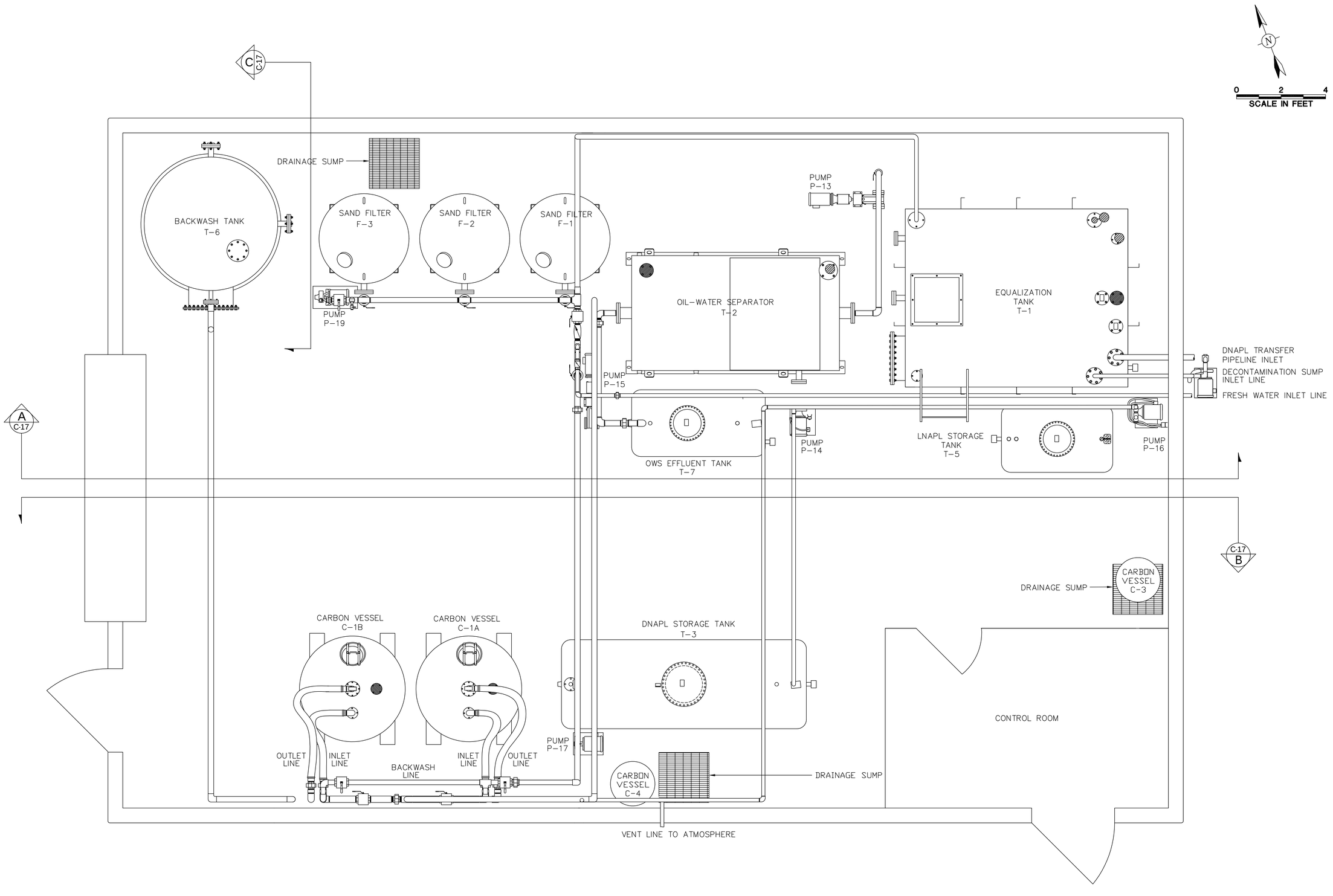

REVISIONS

REV.	DATE	DRWN	CHKD	REMARKS
1	5/25/00	M.D.W.	T.J.O.	AS-BUILT CONSTRUCTION
2	6/04/01	M.D.W.	T.J.O.	AS-BUILT CONSTRUCTION (REVISIONS)

Tetra Tech EM Inc.

DESIGNED BY: H.A.G.
DRAWN BY: R.T.F.
CHECKED BY: R.T.F.
RECHECKED BY: T.J.O.
APPROVED BY: T.J.O.
DATE: 9/28/98

ELECTRONIC COPY OF ORIGINAL DOCUMENT - NOT TO BE USED FOR CONSTRUCTION, BIDDING, RECORDATION, CONVEYANCE, SALES, OR AS THE BASIS FOR THE ISSUANCE OF A PERMIT.
TIMOTHY J. OLIVER
LA. P.E. # 28068
6/04/01
TETRA TECH EM INC.

MADISONVILLE CREOSOTE WORKS
MADISONVILLE, ST. TAMMANY, LOUISIANA

DETAILS, Wastewater Treatment Plant Plan View, Upper Level

EPA

WORK ASSIGNMENT NO.:
026-RA-RA-06AJ

DRAWING NO.:
C-16C

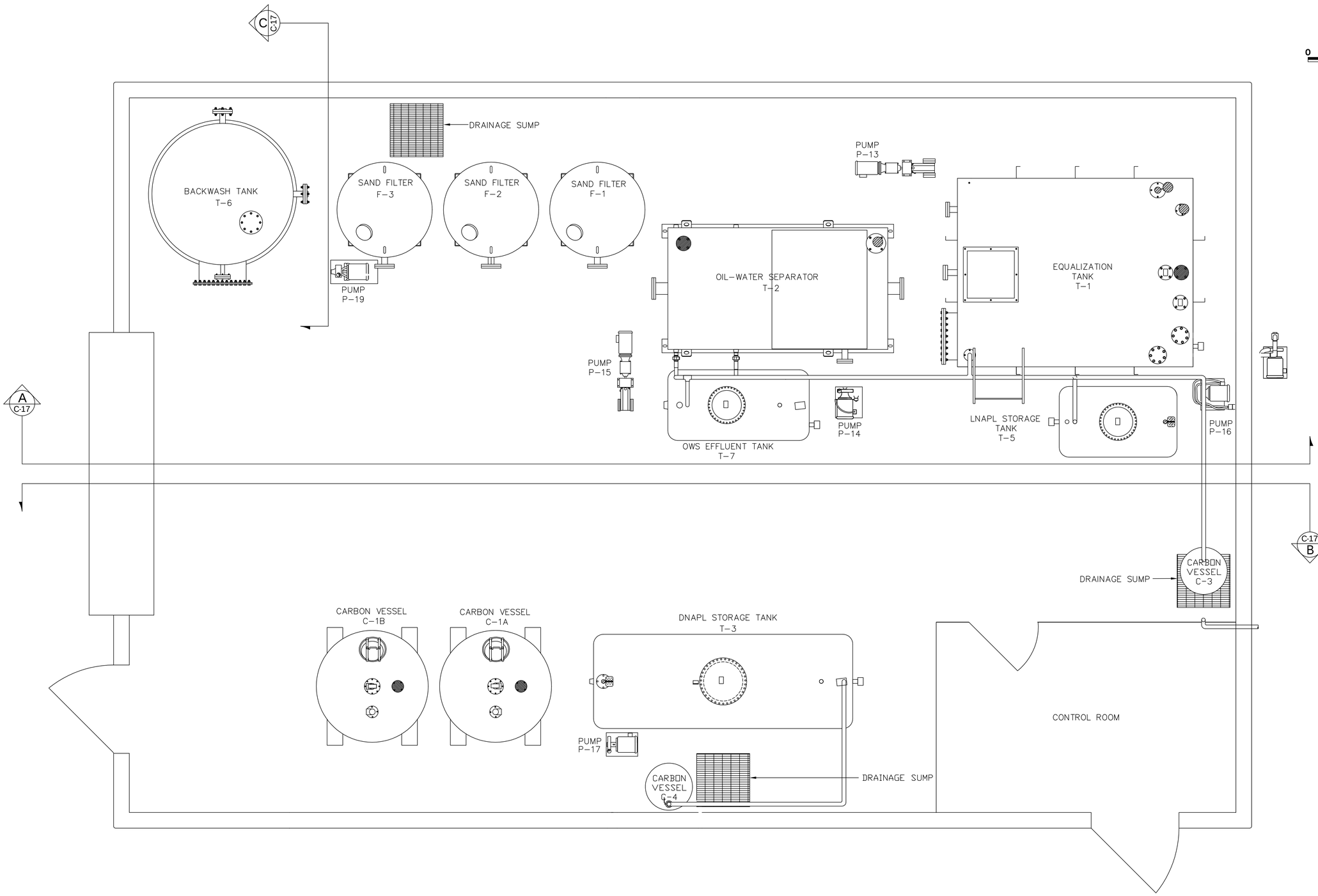

REVISIONS					
REV.	DATE	DRWN	CHKD	REMARKS	
1	5/25/00	M.D.W.	T.J.O.	AS-BUILT CONSTRUCTION	
2	6/04/01	M.D.W.	T.J.O.	REVISED AS-BUILT CONSTRUCTION (WWTP MODIFICATIONS)	

Tetra Tech EM Inc.

DESIGNED BY: H.A.G.
DRAWN BY: R.T.F.
CHECKED BY: R.T.F.
RECHECKED BY: T.J.O.
APPROVED BY: T.J.O.
DATE: 9/28/98

ELECTRONIC COPY OF ORIGINAL DOCUMENT - NOT TO BE USED FOR CONSTRUCTION, BIDDING, RECORDATION, CONVEYANCE, SALES, OR AS THE BASIS FOR THE ISSUANCE OF A PERMIT.

TIMOTHY J. OLIVER
LA. P.E. # 28068
6/04/01
TETRA TECH EM INC.

MADISONVILLE CREOSOTE WORKS
MADISONVILLE, ST. TAMMANY, LOUISIANA

DETAILS, Wastewater Treatment Plant Vent Piping

EPA

WORK ASSIGNMENT NO.:
026-RA-RA-06AJ

DRAWING NO.:
C-16D

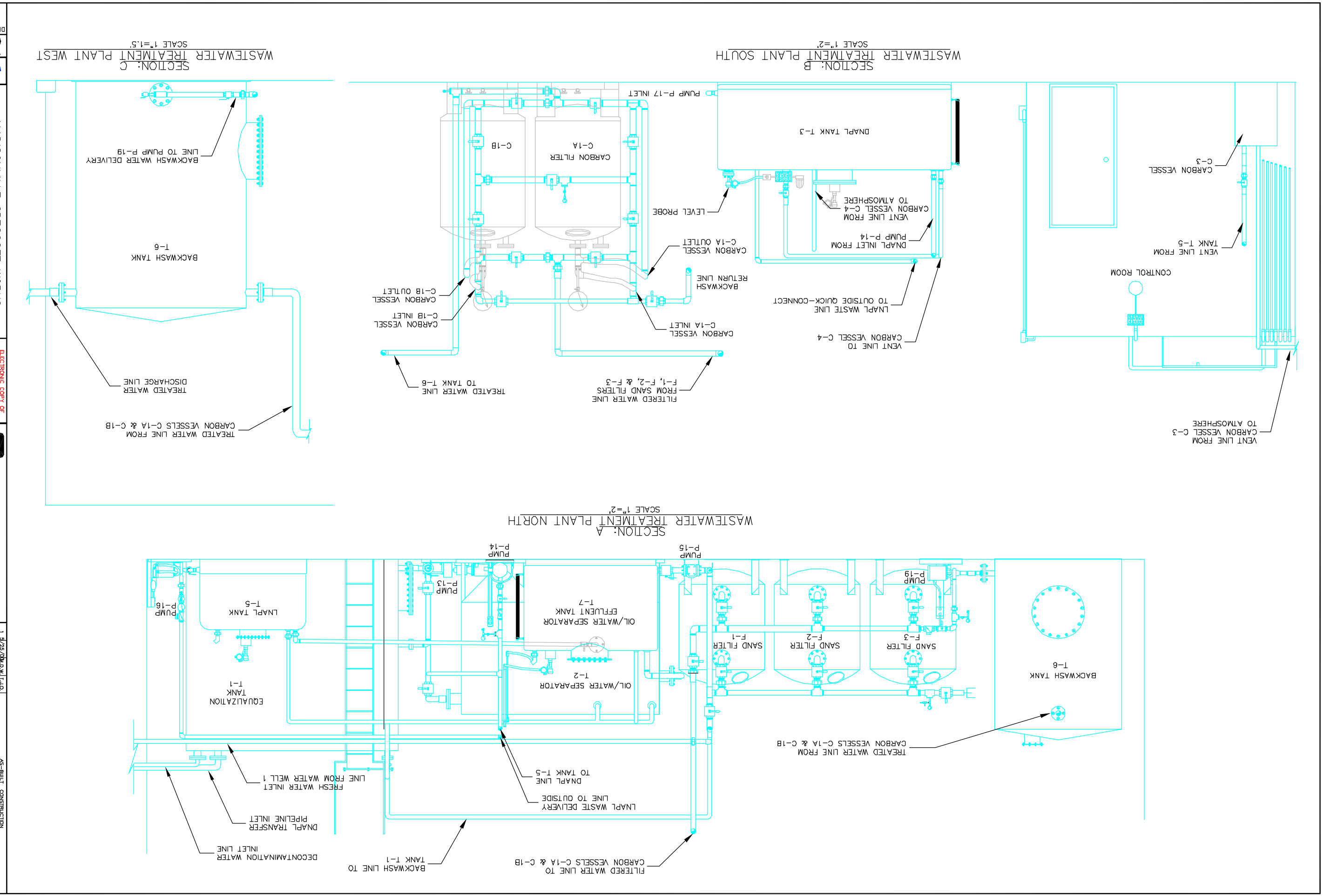

MADISONVILLE CREOSOTE WORKS
MADISONVILLE, ST. TAMMANY, LOUISIANA

DETAILS,
Wastewater Treatment Plant
Section Views

ELECTRONIC COPY OF ORIGINAL DOCUMENT. NOT TO BE USED FOR CONSTRUCTION, BIDDING, RECORDATION, CONVEYANCE, SALES, OR AS THE BASIS FOR THE ISSUANCE OF A PERMIT.

TIMOTHY J. OLIVER
LA. P.E. # 28068
6/04/01
TETRA TECH EM INC.

Tetra Tech EM Inc.

DESIGNED BY: H.A.G.
DRAWN BY: R.F.
CHECKED BY: R.F.
RE-CHECKED BY: T.J.O.
APPROVED BY: T.J.O.
DATE: 9/28/98

REVISIONS

REV.	DATE	DRWN	CHKD	REMARKS
1	5/25/00	M.D.W.	T.J.O.	AS-BUILT CONSTRUCTION
2	6/04/01	T.E.P.	M.D.W.	REVISED AS-BUILT CONSTRUCTION (WWTP MODIFICATIONS)

EPA
WORK ASSIGNMENT NO.: 026-RA-RA-06AJ
DRAWING NO.: C-17

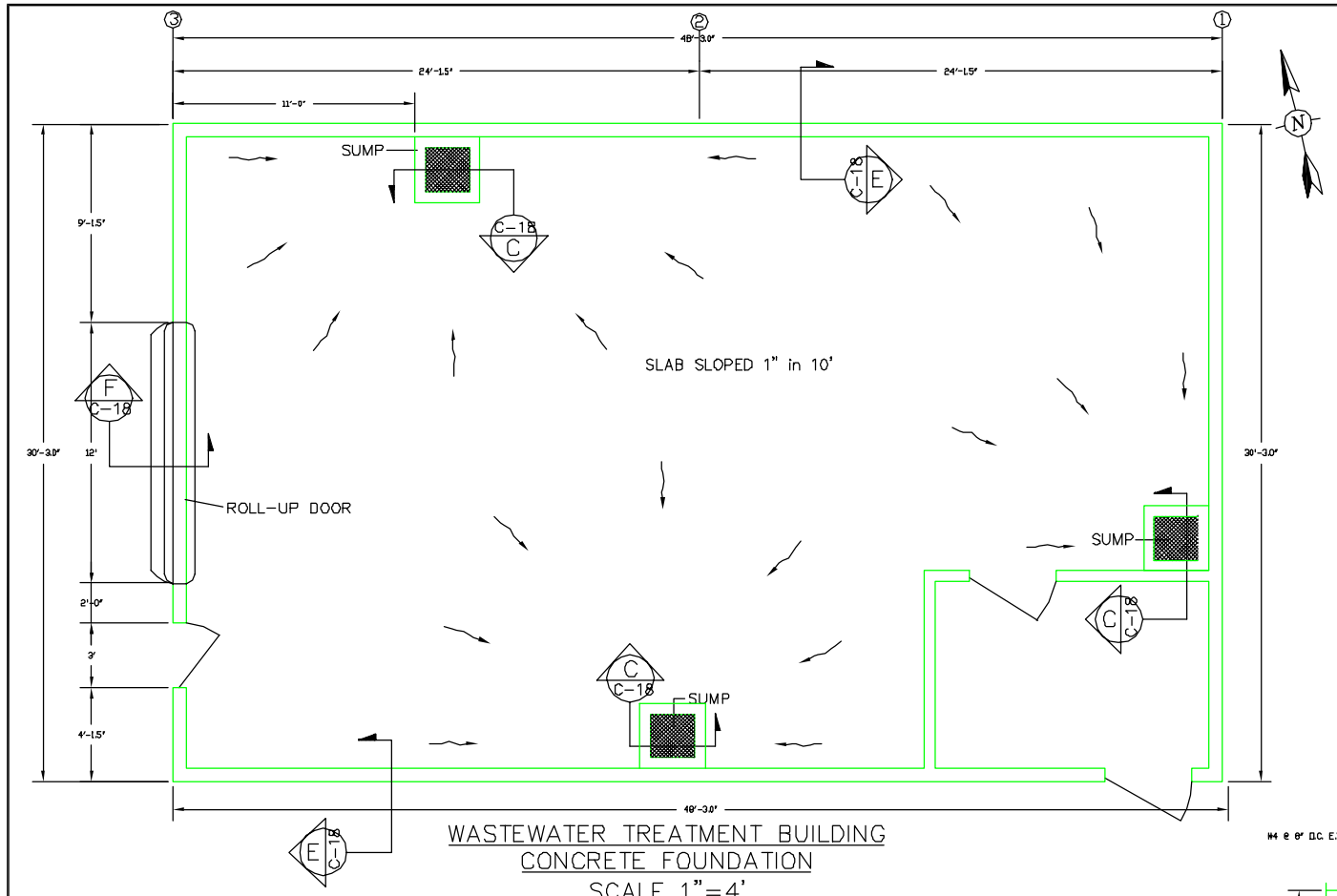

WASTEWATER TREATMENT BUILDING
CONCRETE FOUNDATION
SCALE 1"=4'

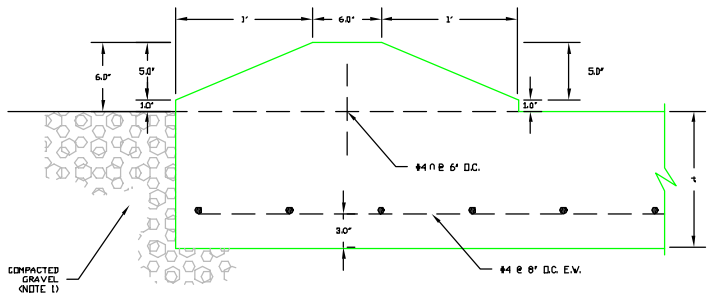

SECTION: A
SCALE 1-1/2"=1.0'

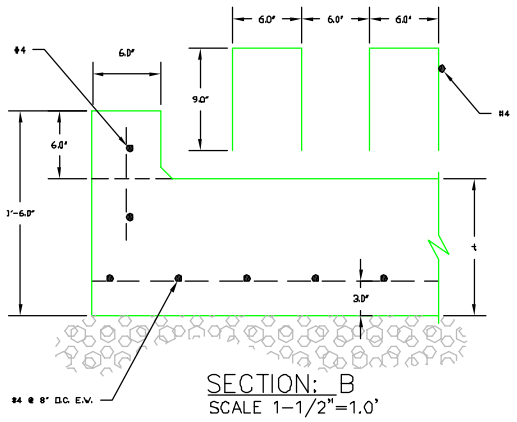

SECTION: B
SCALE 1-1/2"=1.0'

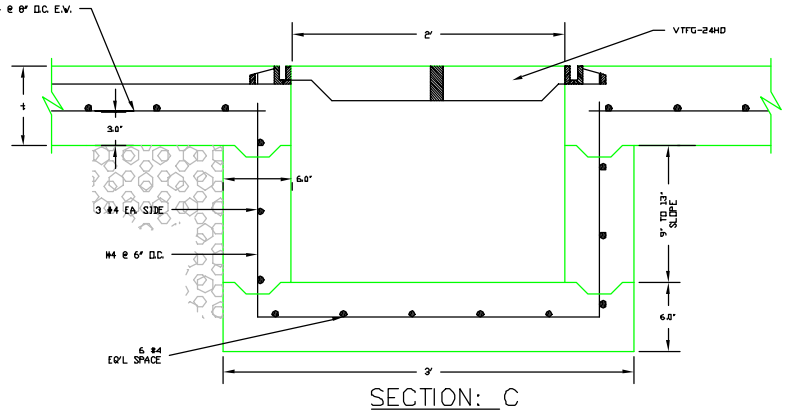

SECTION: C
SCALE 1-1/2"=1.0'

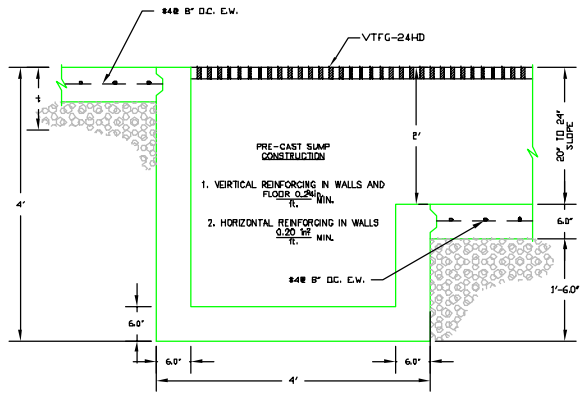

SECTION: D
SCALE 3/4"=1'-0"

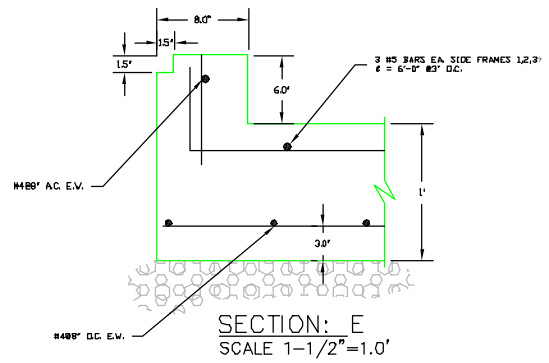

SECTION: E
SCALE 1-1/2"=1.0'

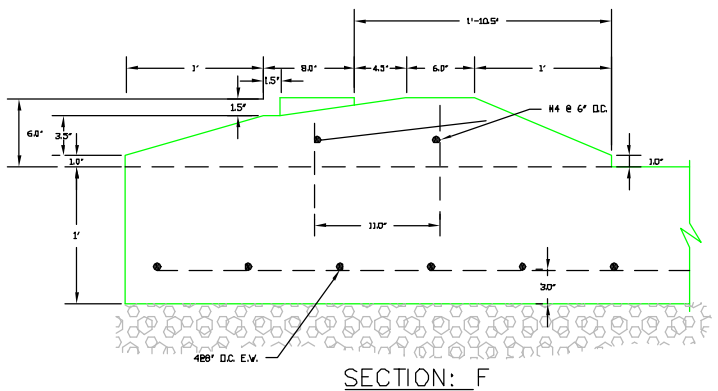

SECTION: F
SCALE 1-1/2"=1.0'

LEGEND:

DRAINAGE DIRECTION

General Notes:

(1) See Drawing C-19 for compacted gravel construction.

(2) Where continuous reinforcing is indicated, bottom bars lapped 6 inches at supports and top bars lapped 30 bar diameters at mid span. Standard 90 degree hooks at all top bars at discontinuous ends. Corner bars at all corners outside beam top bars, same size as top bars and lapped 30 bar diameters each way.

(3) The following reinforcing clearances are provided:
Slabs: 3 inches at earth formed face.
Walls: 1 1/2 inches at formed face, 3 inches at earth formed face

(4) One layer of 6 mil polyethylene vapor barrier beneath all slabs and walls next to grade.

(5) t = 1'-0" for Wastewater Treatment Plant foundation.
t = 11" for Decontamination pad foundation.

Special Notice:

1. Foundation design by Roy D. Cartier, P.E. (Reg. No. 4868), Cartier & Associates, Inc., Manderville, LA. Job 9910, Sheet 1 of 1. April 20, 1999.
2. Metal Building System designed by Wilson J Bailey, P.E., Mueller, Inc., Ballinger, TX 76821. (Reg.#18842) Job#958384, Drawing E1 of 1 and AB1 of 1. April 2, 1999
3. Sealing of the drawing by Tetra Tech EM Inc. does not imply or constitute that the Tetra Tech EM Inc. engineer is resposible for the design of the Metal Building System as furnished by Mueller, Inc. The Tetra Tech EM Inc. engineer is the "Engineer of Record" for the project. Only the construction of the building in accordance with the Mueller, Inc. design is included.

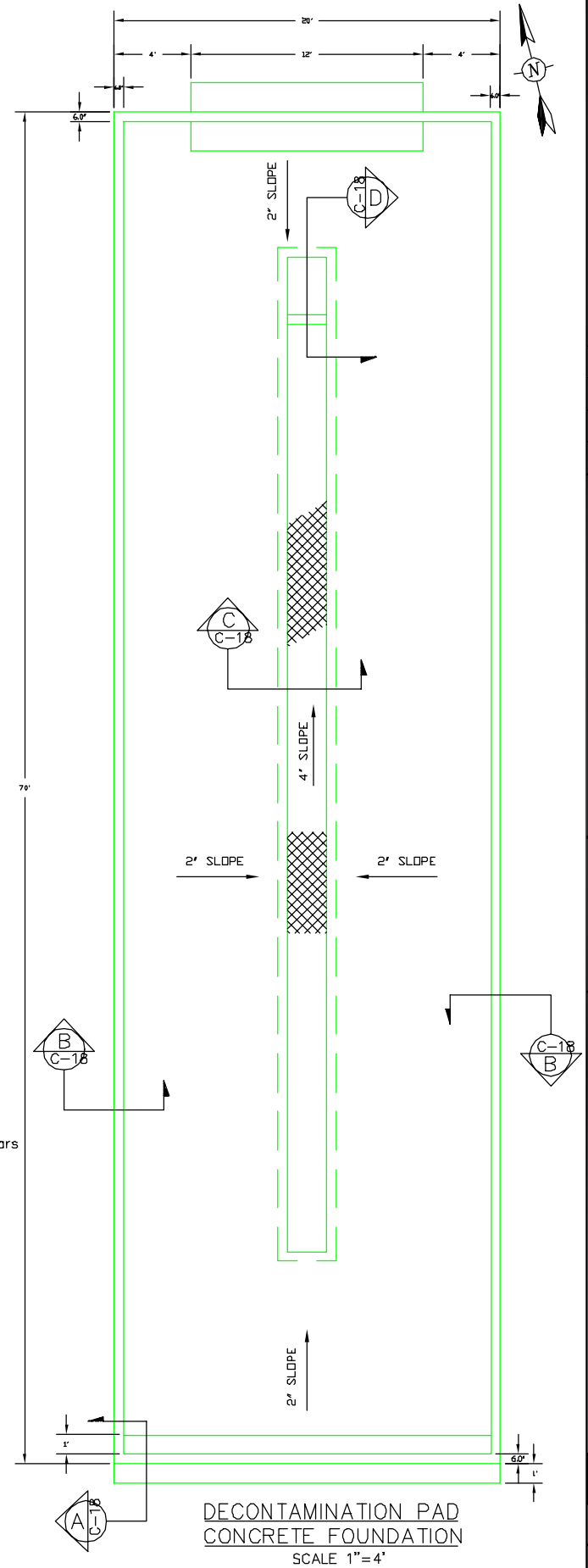

DECONTAMINATION PAD
CONCRETE FOUNDATION
SCALE 1"=4'

REVISIONS

REV.	DATE	DRWN	CHKD	REMARKS
1	6/25/00	TJD		AS-BUILT CONSTRUCTION

Tetra Tech EM Inc.

DESIGNED BY: BY OTHERS
DRAWN BY: BY OTHERS
CHECKED BY: BY OTHERS
RE-CHECKED BY: BY OTHERS
APPROVED BY: BY OTHERS
DATE: 4/2/99

ELECTRONIC COPY OF ORIGINAL DOCUMENT. NOT TO BE USED FOR CONSTRUCTION, BIDDING, RECORDATION, CONVEYANCE, SALES, OR AS THE BASIS FOR THE ISSUANCE OF A PERMIT.

TIMOTHY J. OLIVER
LA. P.E. # 28068
5/25/00
TETRA TECH EM INC.

MADISONVILLE CREOSOTE WORKS
MADISONVILLE, ST. TAMMANY, LOUISIANA

DETAILS, CONCRETE FOUNDATION
Decontamination Area
and Wastewater Treatment Building

EPA

WORK ASSIGNMENT NO.:
026-RA-RA-06AJ

DRAWING NO.:
C-18A

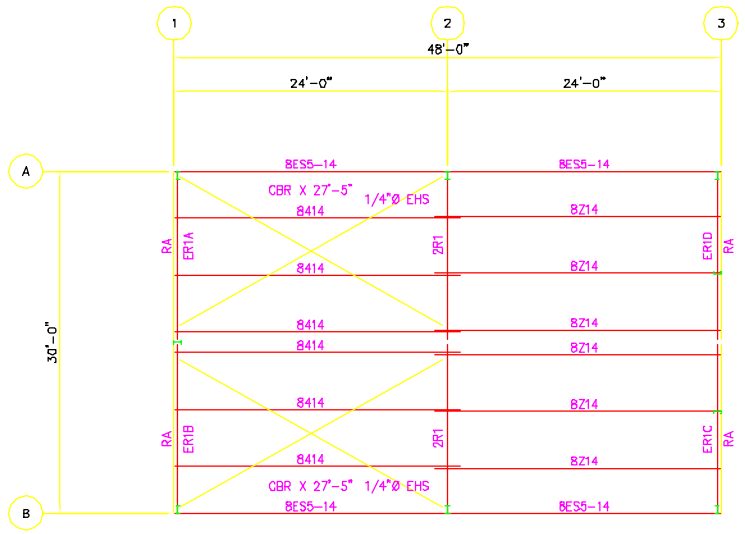

ROOF FRAMING PLAN

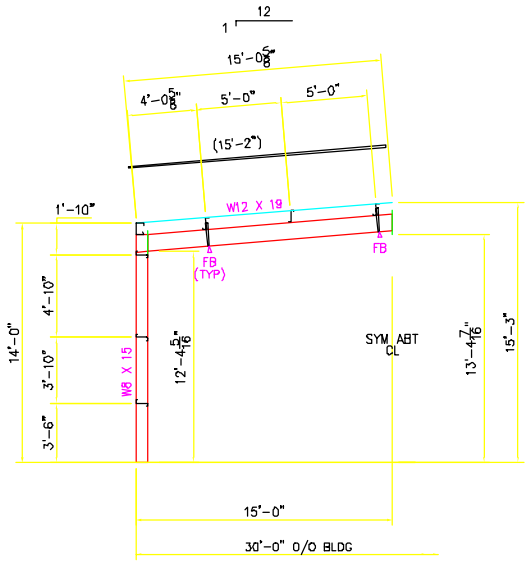

TYPICAL MAIN FRAME HALF CROSS SECTION

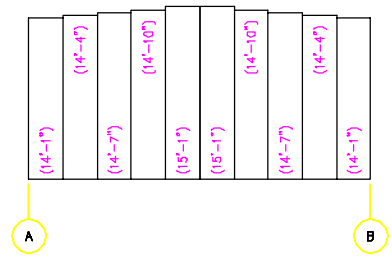

ENDWALL SHEETING ELEVATION @ "1"

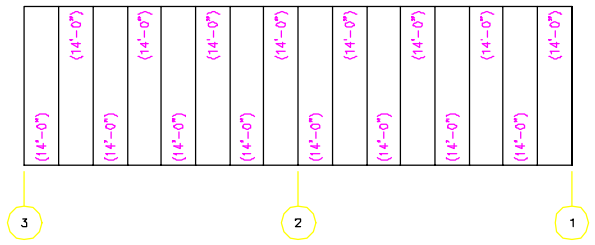

SIDEWALL SHEETING ELEVATION @ "A"

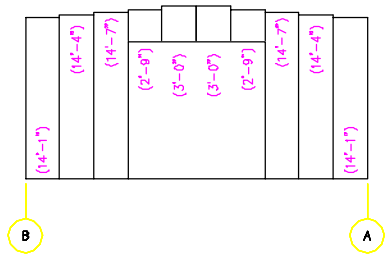

ENDWALL SHEETING ELEVATION @ "3"

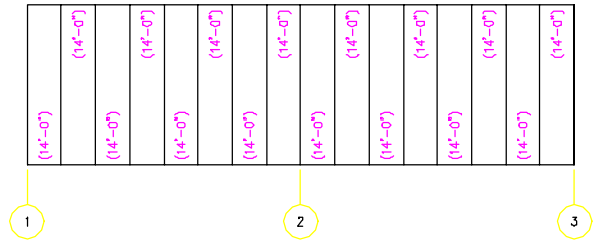

SIDEWALL SHEETING ELEVATION @ "B"

SIDEWALL FRAMING ELEVATION @ "A"

ENDWALL FRAMING ELEVATION @ "1"

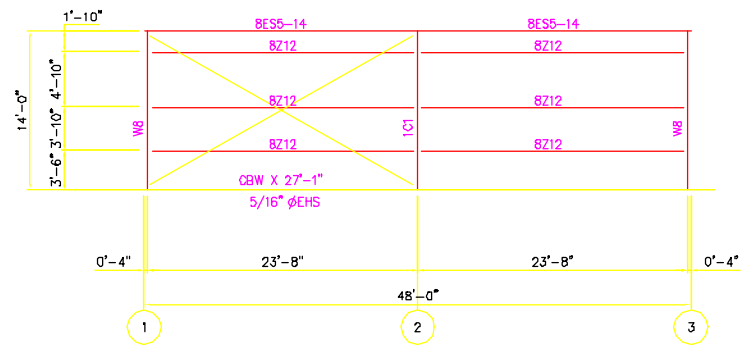

SIDEWALL FRAMING ELEVATION @ "B"

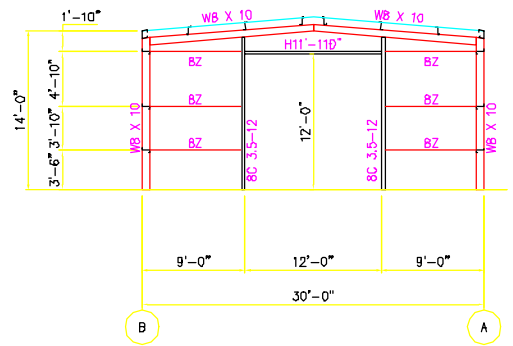

ENDWALL FRAMING ELEVATION @ "3"

GENERAL NOTES

1. All steel shall be fabricated and erected in accordance with the following codes and specifications:
   "Manual of Steel Construction", Ninth Edition, American Institute of Steel Construction (AISC)
   "Low Rise Building Systems Manual", 1996 Edition, Metal Building Manufacturers Association (MBMA)
   "Specifications for the Design of Cold-Formed Steel Structural Members", 1986, American Iron and Steel Institute (AISI)
   "Light Gage Structural Steel Framing System Design Handbook", 1995, Light Gage Structural Institute (LGSI)
2. All built-up members and wide-flange hot-rolled sections to be 50 ksi minimum.
3. All cold-formed members to be 57 ksi minimum as manufactured by Mueller, Inc. or equal.
4. All other framing material to be ASTM A36, 36 ksi minimum unless noted.
5. Cable bracing to be "Brace Grip" system as manufactured by Florida Wire and Cable Company, EHS cable or equal.
6. Shop connections shall be welded in accordance with AWS standards as published in the "Code for Welding in Building Construction." Flange to web welds of built-up plate sections shall be continuous on one side of the web using an automatic submerged arc process. Other welds shall be by hand arc process or semi-automatic welder. Butt welds in flange and web plates or structural shapes shall be full penetration welds. All welding electrodes shall be A233 Class E-70 Series. Minimum welds on primary structural members to be 3/16 fillet welds. Unless shown otherwise on drawings, all moment connection weld shall be:
   1/4" fillet welds - web to end plate
   full penetration welds - flanges to end plates
   full penetration welds - web splices, flange plate splices
7. When joining material greater than 1/2" thick, minimum fillet welds to be3/8".
8. All structural steel shall be shop fabricated unless noted.
9. All steel shall be mechanically cleaned to remove loose rust or mill scale, etc., and given one shop coat of red oxide primer equal in performance for Government Specification TTP-636C unless otherwise specified in the purchase agreement.
10. All main frame and endwall connection bolts to be ASTM A325 bolts unless noted. Other connection bolts to be ASTM A307 machine bolts. All secondary framing to use 1/2" machine bolts with 3/16"plates unless noted.
11. All anchor bolts to be black ASTM A307.
12. All self-framing walkdoors and windows are to be field located.
13. Brace cables are to be field cut and assembled.
14. All dimensions and design data on this drawing are the most accurate available to this engineer as of this date. Any changes are to be reported immediately to this engineer for possible design changes. The responsibility of this engineer shall be limited to the structural design of the building and shall not include the design or quantity of non-structural accessories such as trim, flashing, doors, ventilators, windows, etc., nor the suitability of this building for a particular purpose.

Special Notice:
1. Metal Building System designed by Wilson J Bailey, P.E., Mueller, Inc., Ballinger, TX 76821. (Reg.#18842) Job#958384, Drawing E1 of 1. April 2, 1999

2. Sealing of the drawing by Tetra Tech EM Inc. does not imply or constitute that the Tetra Tech EM Inc. engineer is responsible for the design of the Metal Building System as furnished by Mueller, Inc. The Tetra Tech EM Inc. engineer is the "Engineer of Record" for the project. Only the construction of the building in accordance with the Mueller, Inc. design is included.

REVISIONS

REV.	DATE	DRWN	CHKD	REMARKS
1	5/25/00	T.E.P.	T.J.O.	AS-BUILT CONSTRUCTION

Tetra Tech EM Inc.

DESIGNED BY: BY OTHERS RE-CHECKED BY: BY OTHERS
DRAWN BY: BY OTHERS APPROVED BY: BY OTHERS
CHECKED BY: BY OTHERS DATE: 4/2/99

ELECTRONIC COPY OF ORIGINAL DOCUMENT. NOT TO BE USED FOR CONSTRUCTION BIDDING. RECORDATION, CONVEYANCE, SALES, OR AS THE BASIS FOR THE ISSUANCE OF A PERMIT.

TIMOTHY J. OLIVER
LA. P.E. # 28068
5/25/00
TETRA TECH EM INC.

MADISONVILLE CREOSOTE WORKS
MADISONVILLE, ST. TAMMANY, LOUISIANA

DETAILS
Wastewater Treatment Building
Structural Design

EPA

WORK ASSIGNMENT NO.:
026-RA-RA-06AJ

DRAWING NO.:
C-18B

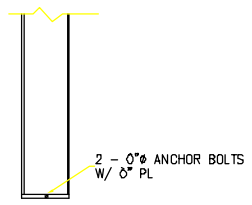

MAIN FRAME BASE DETAIL

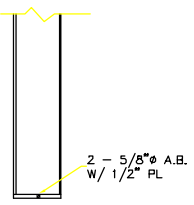

ENDWALL FRAME BASE DETAIL

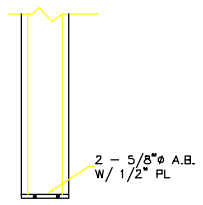

DOOR JAMB BASE DETAIL

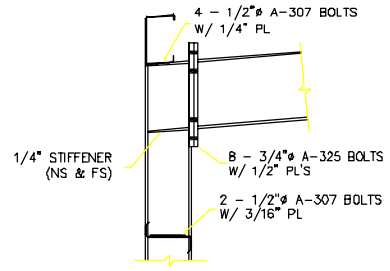

MAIN FRAME HAUNCH DETAIL

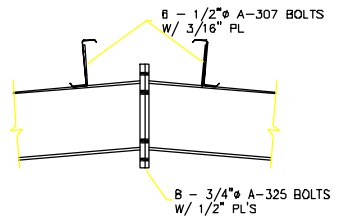

MAIN FRAME PEAK DETAIL

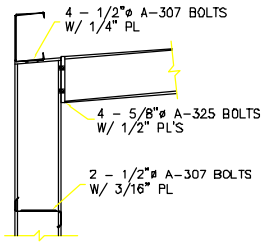

ENDWALL FRAME HAUNCH DETAIL

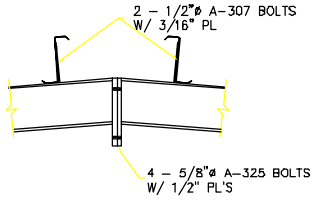

ENDWALL FRAME PEAK DETAIL

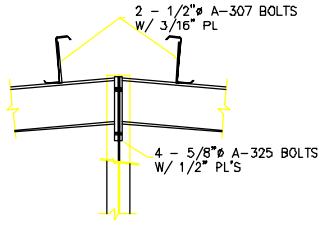

ENDWALL FRAME PEAK DETAIL

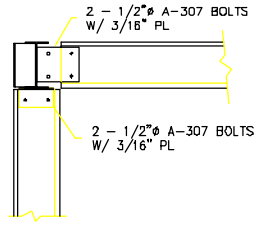

CORNER COLUMN DETAIL

MEMBER LEGEND AND SIZES (Unless Otherwise Noted):

8ES5–14 – Eave Strut 8 X 5 ES 14 ga.

8Z	– Zee 8 x 2 1/2 16 Ga.
8Z14	– Zee 8 x 2 1/2 14 Ga.
8Z12	– Zee 8 x 2 1/2 12 Ga.
8C	– Cee 8 x 2 1/2 16 Ga.
8C14	– Cee 8 x 2 1/2 14 Ga.
8C12	– Cee 8 x 2 1/2 12 Ga.
8C3.5–14	– Cee 8 x 3 1/2 14 Ga.
8C3.5–12	– Cee 8 x 3 1/2 12 Ga.

Flange Bracing	– L 2 x 2 x 14 Ga.
Base Angle	– L 4 x 2 x 14 Ga.
Rake Angle	– L 4 x 2 x 14 Ga.
Cable Bracing	– 5/16" Dia. unless noted
Girts	– 8Z2.5–16 unless noted
Purlin Laps	– LGSI 2'–0" Lap
Sidewall Girt Laps	– LGSI Flush
Endwall Girt Laps	– LGSI Flush

DESIGN LOADS PER MBMA

20 psf live load (roof)
20 psf live load (frames)
0 psf ground snow load
0 psf collateral load
Seismic Zone 1
95 mph Wind Load (Exposure "C")
Weight of structure

GENERAL NOTES

1. All steel shall be fabricated and erected in accordance with the following codes and specifications:
   "Manual of Steel Construction", Ninth Edition, American Institute of Steel Construction (AISC)
   "Low Rise Building Systems Manual", 1996 Edition, Metal Building Manufacturers Association (MBMA)
   "Specifications for the Design of Cold-Formed Steel Structural Members", 1986, American Iron and Steel Institute (AISI)
   "Light Gage Structural Steel Framing System Design Handbook", 1995, Light Gage Structural Institute (LGSI)
2. All built-up members and wide-flange hot-rolled sections to be 50 ksi minimum.
3. All cold-formed members to be 57 ksi minimum as manufactured by Mueller, Inc. or equal.
4. All other framing material to be ASTM A36, 36 ksi minimum unless noted.
5. Cable bracing to be "Brace Grip" system as manufactured by Florida Wire and Cable Company, EHS cable or equal.
6. Shop connections shall be welded in accordance with AWS standards as published in the "Code for Welding in Building Construction." Flange to web welds of built-up plate sections shall be continuous on one side of the web using an automatic submerged arc process. Other welds shall be by hand arc process or semi-automatic welder. Butt welds in flange and web plates or structural shapes shall be full penetration welds. All welding electrodes shall be A233 Class E-70 Series. Minimum welds on primary structural members to be 3/16 fillet welds. Unless shown otherwise on drawings, all moment connection weld shall be:
   1/4" fillet welds – web to end plate
   full penetration welds – flanges to end plates
   full penetration welds – web splices, flange plate splices
7. When joining material greater than 1/2" thick, minimum fillet welds to be3/8".
8. All structural steel shall be shop fabricated unless noted.
9. All steel shall be mechanically cleaned to remove loose rust or mill scale, etc., and given one shop coat of red oxide primer equal in performance for Government Specification TTP–636C unless otherwise specified in the purchase agreement.
10. All main frame and endwall connection bolts to be ASTM A325 bolts unless noted. Other connection bolts to be ASTM A307 machine bolts. All secondary framing to use 1/2" machine bolts with 3/16"plates unless noted.
11. All anchor bolts to be black ASTM A307.
12. All self-framing walkdoors and windows are to be field located.
13. Brace cables are to be field cut and assembled.
14. All dimensions and design data on this drawing are the most accurate available to this engineer as of this date. Any changes are to be reported immediately to this engineer for possible design changes. The responsibility of this engineer shall be limited to the structural design of the building and shall not include the design or quantity of non-structural accessories such as trim, flashing, doors, ventilators, windows, etc., nor the suitability of this building for a particular purpose.

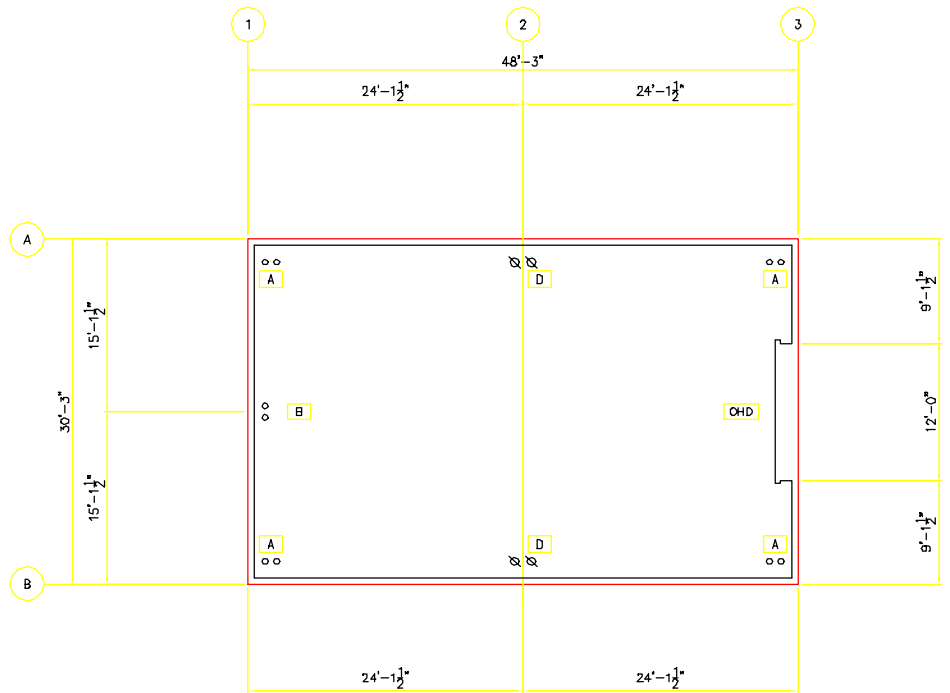

ANCHOR BOLT SETTING PLAN

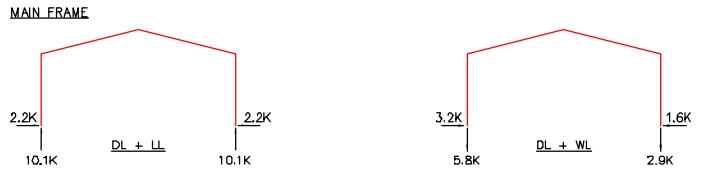

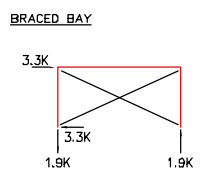

REACTIONS

NOTE:
REACTIONS INVOLVING WIND LOADS INDICATE REACTIONS RESULTING FROM WIND FROM LEFT TO RIGHT. REVERSE DIAGRAMS FOR WIND FROM RIGHT TO LEFT. REACTIONS INVOLVING WIND HAVE BEEN REDUCED 25% PER CODE.

Special Notice:
1. Metal Building System designed by Wilson J Bailey, P.E., Mueller, Inc., Ballinger, TX 76821. (Reg.#18842) Job#958384, Drawing AB1 of 1. April 2, 1999

2. Sealing of the drawing by Tetra Tech EM Inc. does not imply or constitute that the Tetra Tech EM Inc. engineer is resposible for the design of the Metal Building System as furnished by Mueller, Inc. The Tetra Tech EM Inc. engineer is the "Engineer of Record" for the project. Only the construction of the building in accordance with the Mueller, Inc. design is included.

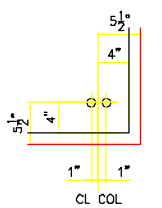

AB DETAIL "A"

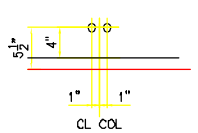

AB DETAIL "B"

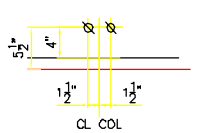

AB DETAIL "D"

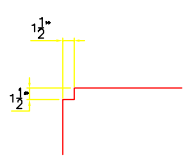

TYP. SHEETING RECESS

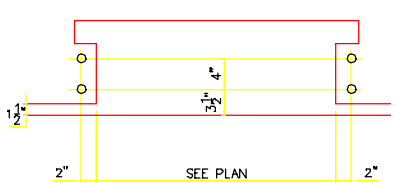

O. H. DOOR BOLT LAYOUT "OHD"

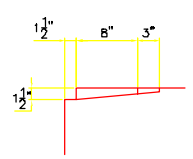

TYP. O. H. DOOR RECESS

ANCHOR BOLT DETAIL	SYMBOL	DIA.	QTY.	LENGTH	THRD.	HOOK	PROJ.
BOLT LENGTH / THRD / HOOK		1/2"	–	0'–8"	2"	2"	2"
		5/8"	14	1'–3"	3"	3"	2"
		3/4"	4	1'–6"	3"	3"	3"
		7/8"	–	1'–9"	3"	3"	3"
		1"	–	2'–0"	3"	4"	3"
		1 1/8"	–	2'–3"	4"	5"	4"
ANCHOR BOLTS BY MUELLER		1 1/4"	–	2'–6"	4"	5"	4"

REVISIONS

REV.	DATE	DRWN	CHKD	REMARKS
1	5/25/00	T.J.O.		AS–BUILT CONSTRUCTION

Tetra Tech EM Inc.

DESIGNED BY BY OTHERS
DRAWN BY: BY OTHERS
CHECKED BY BY OTHERS

RE–CHECKED BY BY OTHERS
APPROVED BY BY OTHERS
DATE: 4/2/99

ELECTRONIC COPY OF ORIGINAL DOCUMENT. NOT TO BE USED FOR CONSTRUCTION, BIDDING, RECORDATION, CONVEYANCE, SALES, OR AS THE BASIS FOR THE ISSUANCE OF A PERMIT.

TIMOTHY J. OLIVER
LA. P.E. # 28068
5/25/00
TETRA TECH EM INC.

MADISONVILLE CREOSOTE WORKS
MADISONVILLE, ST. TAMMANY, LOUISIANA

DETAILS
Wastewater Treatment Building
Anchor Bolt Plan

EPA

WORK ASSIGNMENT NO.:
026–RA–RA–06AJ

DRAWING NO.:
C–18C

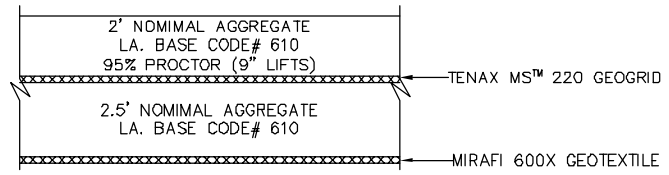

WASTEWATER TREATMENT PLANT PAD
AND DECONTAMINATED PAD
N.T.S.

NOTE: Pad extends 5 feet beyond concrete building foundation in all directions. Surrounding areas are built in accordence with gravel haul road detail.

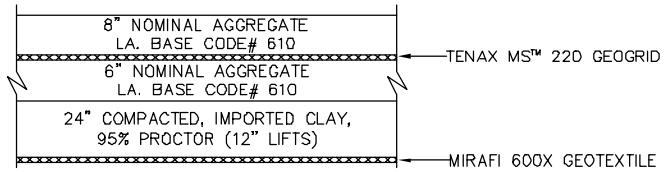

GRAVEL HAUL ROAD DETAIL
INCLUDING SITE SUPPORT AREA
N.T.S.

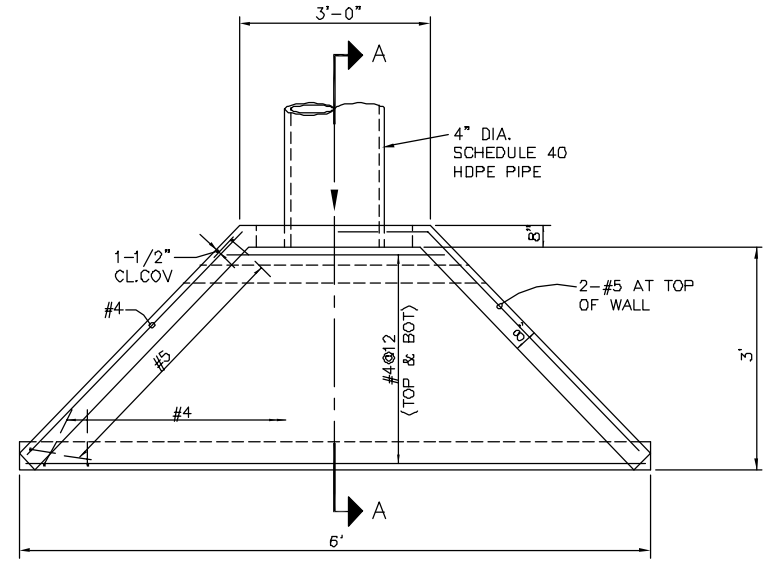

HEADWALL PLAN
N.T.S.

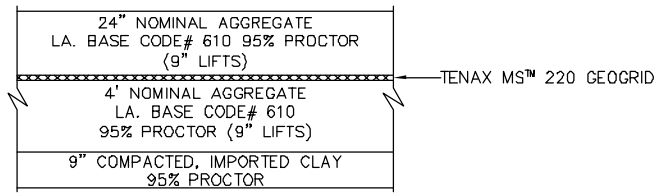

THERMAL TREATMENT PAD
N.T.S.

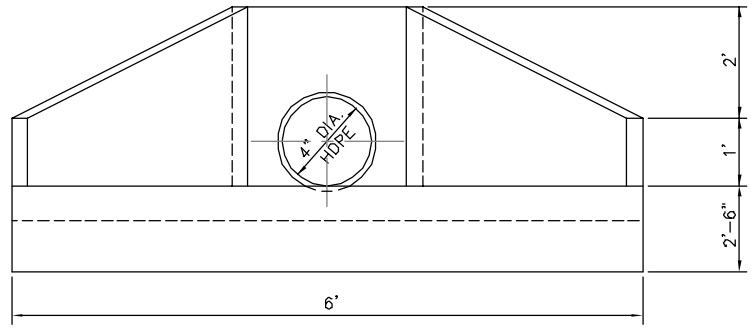

HEADWALL ELEVATION
N.T.S.

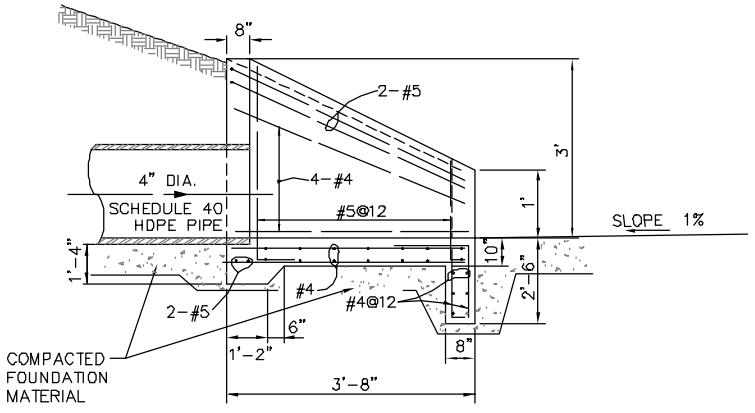

SECTION A-A
N.T.S.

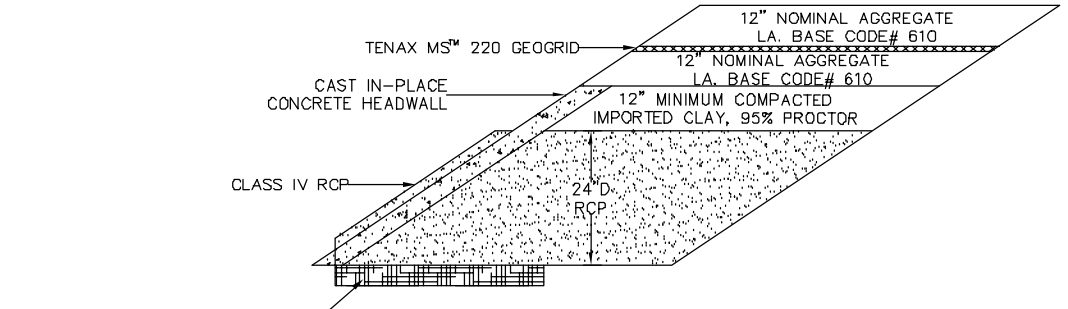

SINGLE CULVERT DETAIL END VIEW
N.T.S.

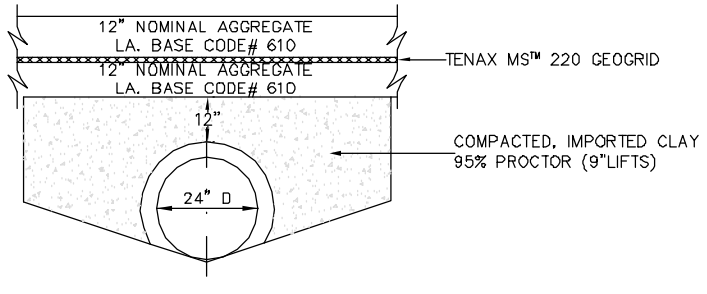

SINGLE CULVERT DETAIL CROSS SECTION
N.T.S.

STRUCTURAL NOTES:

1. PROVIDE 2" CLEAR COVER UNLESS NOTED.
2. ALL CONCRETE MINIMUM 28-DAY COMPRESSIVE STRENGTH OF 3,500 psi.
3. ALL REINFORCING STEEL ASTM A615 GRADE 60.
4. ALL WELDED WIRE FABRIC ASTM A185 (fs=30,000 psi).

REVISIONS

REV.	DATE	DRWN	CHKD	REMARKS
1	5/25/00	T.E.P.	T.J.O.	AS-BUILT CONSTRUCTION

Tetra Tech EM Inc.

DESIGNED BY: H.A.G.
DRAWN BY: R.T.F.
CHECKED BY: D.A.R.

RE-CHECKED BY: T.J.O.
APPROVED BY: T.J.O.
DATE: 9/28/98

ELECTRONIC COPY OF ORIGINAL DOCUMENT. NOT TO BE USED FOR CONSTRUCTION, BIDDING, RECORDATION, CONVEYANCE, SALES, OR AS THE BASIS FOR THE ISSUANCE OF A PERMIT.

TIMOTHY J. OLIVER
LA. P.E. # 28065
5/25/00
TETRA TECH EM INC.

MADISONVILLE CREOSOTE WORKS
MADISONVILLE, ST. TAMMANY, LOUISIANA

MISCELLANEOUS DETAILS

EPA

WORK ASSIGNMENT NO.:
026-RA-RA-06AJ

DRAWING NO.:
C-19A

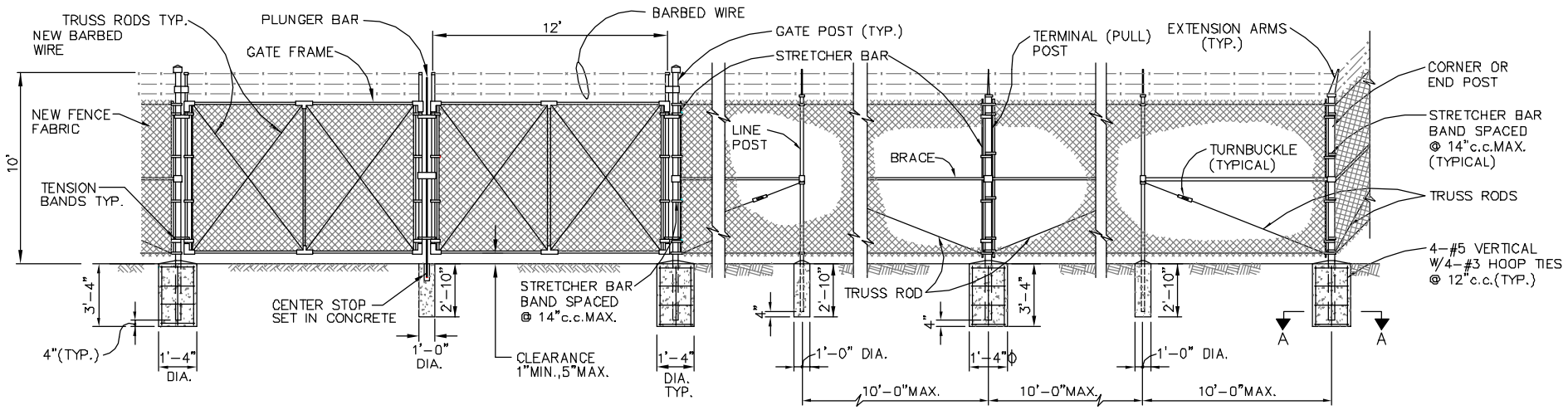

VEHICLE GATE
SCALE: 1/4" = 1'-0"

CHAIN LINK FENCE DETAIL
SCALE: 1/4" = 1'-0"

NOTES:
1. INSTALL TWO GATE KEEPERS TO HOLD GATES IN OPEN POSITION. THE GATES SHALL SWING AS INDICATED ON THE DRAWINGS.
2. WHERE FENCE LINE HAS A CHANGE IN DIRECTION OF 15 DEGREES OR MORE, A TERMINAL POST SHALL BE USED.
3. INSTALL REINFORCING AT GATE, CORNER, OR END, AND AT TERMINAL POST CONCRETE FOOTINGS.

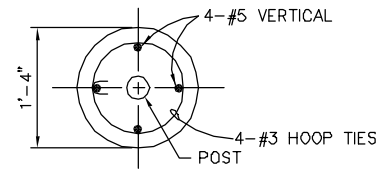

POST FOOTING
DETAIL A-A
SCALE: 1" = 1'-0"

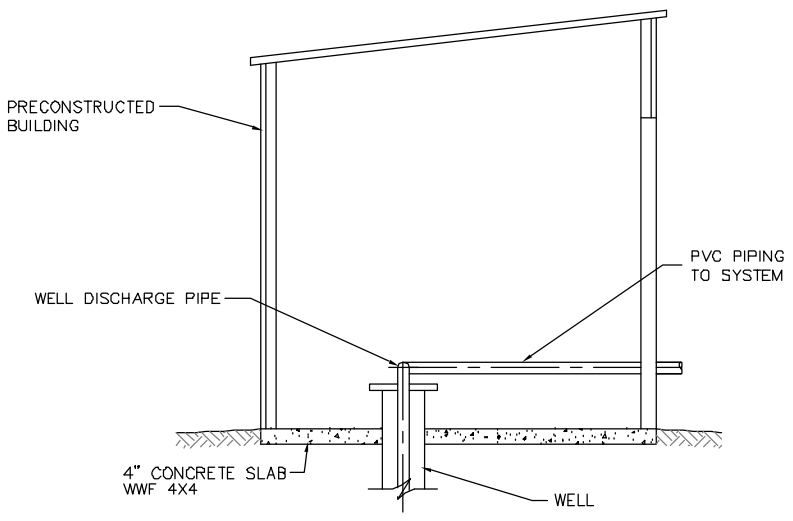

THERMAL TREATMENT WATER WELL-SECTION VIEW
NOT TO SCALE

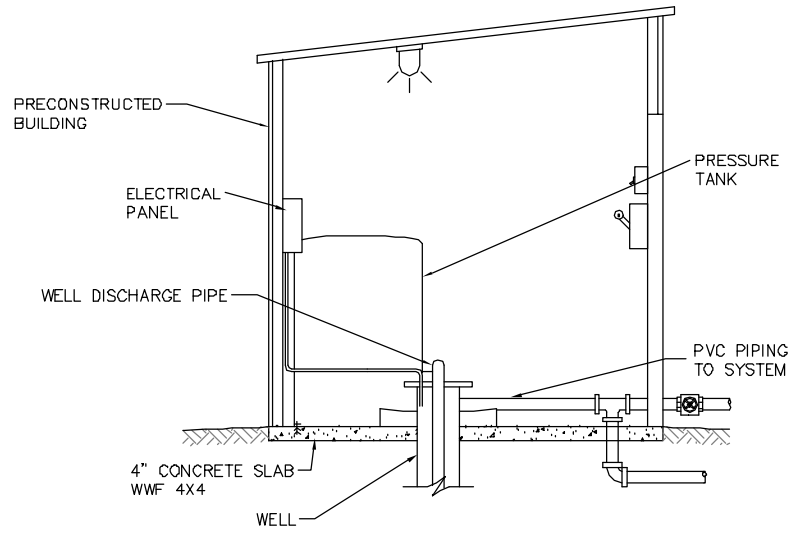

WASTEWATER TREATMENT PLANT WATER WELL-SECTION VIEW
NOT TO SCALE

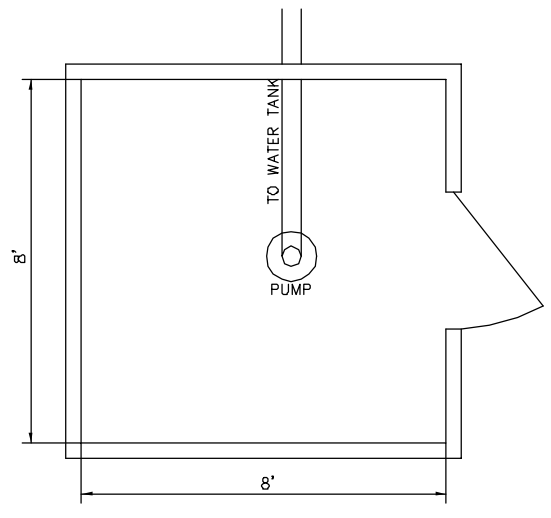

THERMAL TREATMENT WATER WELL-PLAN VIEW
NOT TO SCALE

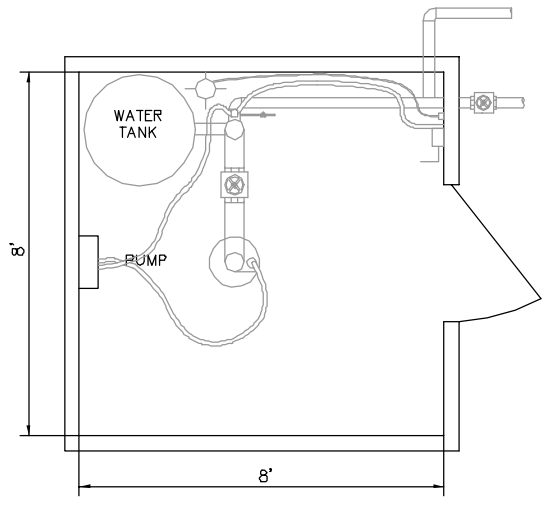

WASTEWATER TREATMENT PLANT WATER WELL-PLAN VIEW
NOT TO SCALE

REVISIONS

REV.	DATE	DRWN	REMARKS
1	9/25/00	T.J.O.	AS-BUILT CONSTRUCTION
1	6/04/01	T.J.O.	REVISED AS-BUILT CONSTRUCTION (WWTP MODIFICATIONS)

Tetra Tech EM Inc.

DESIGNED BY: H.A.G. RE-CHECKED BY: T.J.O.
DRAWN BY: R.T.F. APPROVED BY: T.J.O.
CHECKED BY: D.A.R. DATE: 9/28/98

ELECTRONIC COPY OF ORIGINAL DOCUMENT. NOT TO BE USED FOR CONSTRUCTION BIDDING, RECORDATION, CONVEYANCE, SALES, OR AS THE BASIS FOR THE ISSUANCE OF A PERMIT.

TIMOTHY J. OLIVER
LA. P.E. # 28068
5/25/00
TETRA TECH EM INC.

MADISONVILLE CREOSOTE WORKS
MADISONVILLE, ST. TAMMANY, LOUISIANA

MISCELLANEOUS DETAILS

EPA

WORK ASSIGNMENT NO.:
026-RA-RA-06AJ

DRAWING NO.:
C-19B

TRENCH 2

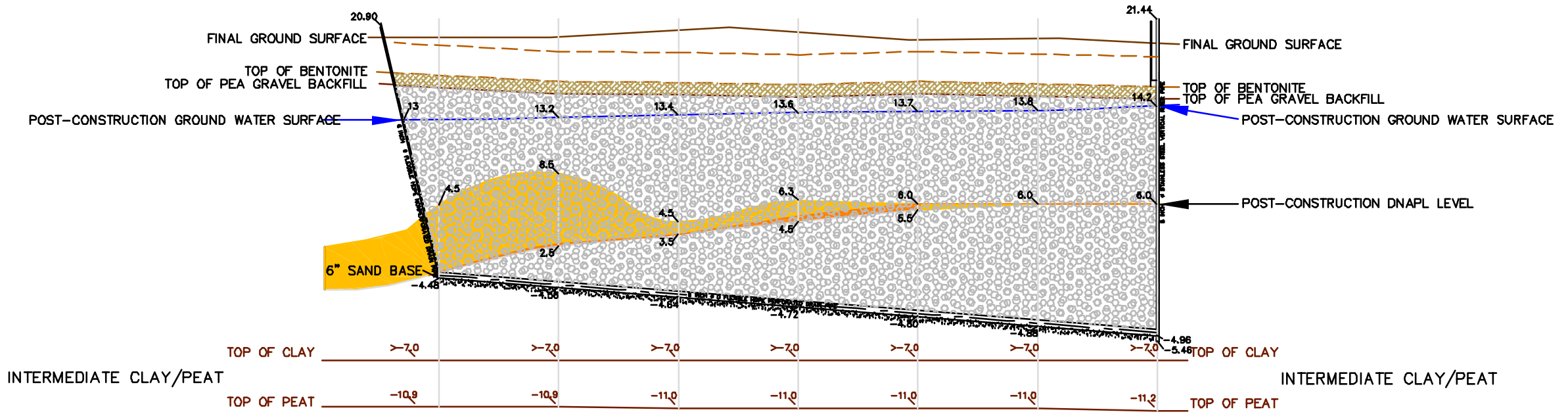

TRENCH 1

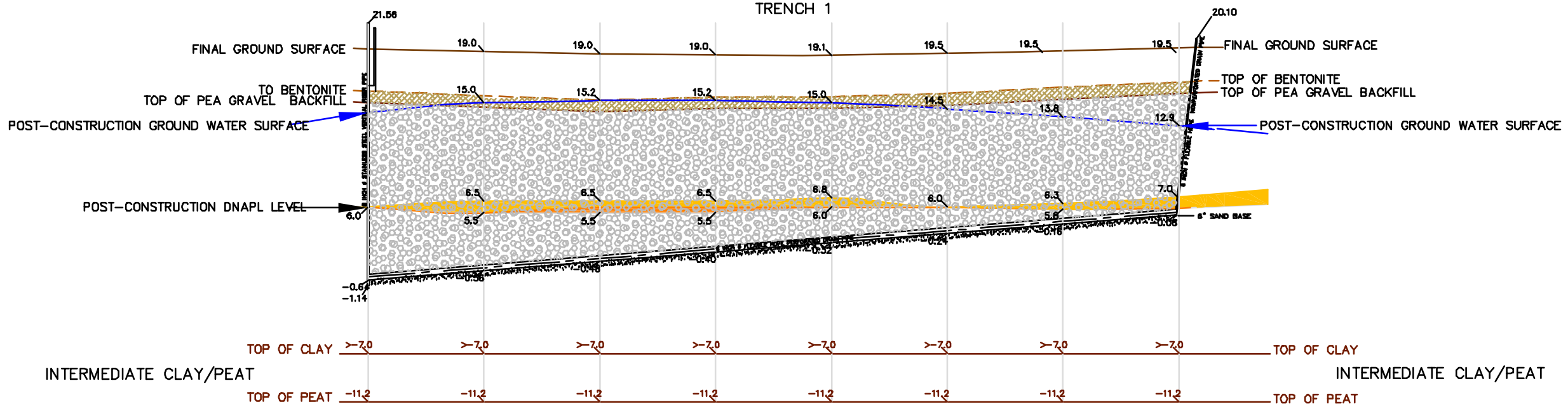

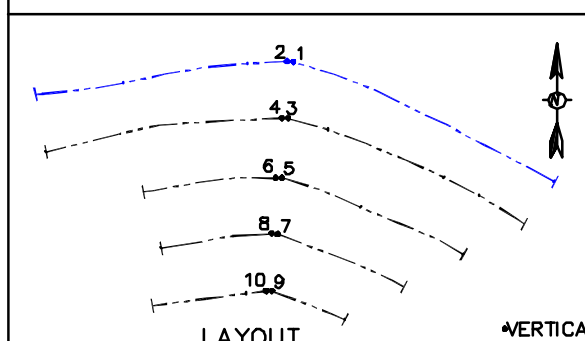

LAYOUT
DNAPL RECOVERY TRENCH

*VERTICAL RISER PIPE
⊣ PIPE CLEANOUT

LEGEND

-11.0 GEOLOGIC MARKER GROUND SURFACES (FEET NGVD)

-10.0 PIPE SET GROUND SURFACES (FEET NGVD)

PRE-CONSTRUCTION GROUND WATER SURFACE

GRAVEL FILL — PRE-CONSTRUCTION LOCATION OF SILTY SAND

SAND BASE — PRE-CONSTRUCTION LOCATION OF SILTY SAND SATURATED WITH DNAPL

BENTONITE FILL

VERTICAL SCALE: 10, 5, 0

SCALE IN FEET: 0, 20, 40

VERTICAL EXAGGERATION RATIO: 4

NOTES:

DRAIN PIPE SLOPE: 2.0%
PRE-CONSTRUCTION
WATER LEVELS MEASURED APRIL 7, 1996 (FEET NGVD)
POST-CONSTRUCTION WATER LEVELS MEASURED MAY 19, 2000
CLEAN-OUT DETAIL ON C-27
VAULT DETAIL ON C-27
CROSS-SECTIONAL VIEW OF TRENCH ON C-20
RISER DETAIL ON C-27

REVISIONS

REV.	DATE	DRWN	CHKD	REMARKS
1	1/4/96	R.T.F.	T.J.O.	DNAPL TRENCH RELOCATION
2	6/9/98	T.E.P.	T.J.O.	AS-BUILT CONSTRUCTION

Tetra Tech EM Inc.

DESIGNED BY: D.A.R.
DRAWN BY: R.T.F.
CHECKED BY: D.A.R.
RE-CHECKED BY: T.J.O.
APPROVED BY: T.J.O.
DATE: 9/28/98

ELECTRONIC COPY OF ORIGINAL DOCUMENT. NOT TO BE USED FOR CONSTRUCTION PURPOSES, RECORDATION, CONVEYANCE, SALES, OR AS THE BASIS FOR THE ISSUANCE OF A PERMIT.

TIMOTHY J. OLIVER
LA. P.E. # 28068
5/25/00
TETRA TECH EM INC.

MADISONVILLE CREOSOTE WORKS
MADISONVILLE, ST. TAMMANY, LOUISIANA

DETAILS, CROSS-SECTION VIEW DNAPL Recovery Trench 1 and 2 Installation Elevations

EPA

WORK ASSIGNMENT NO.: 026-RA-RA-06AJ

DRAWING NO.: C-22

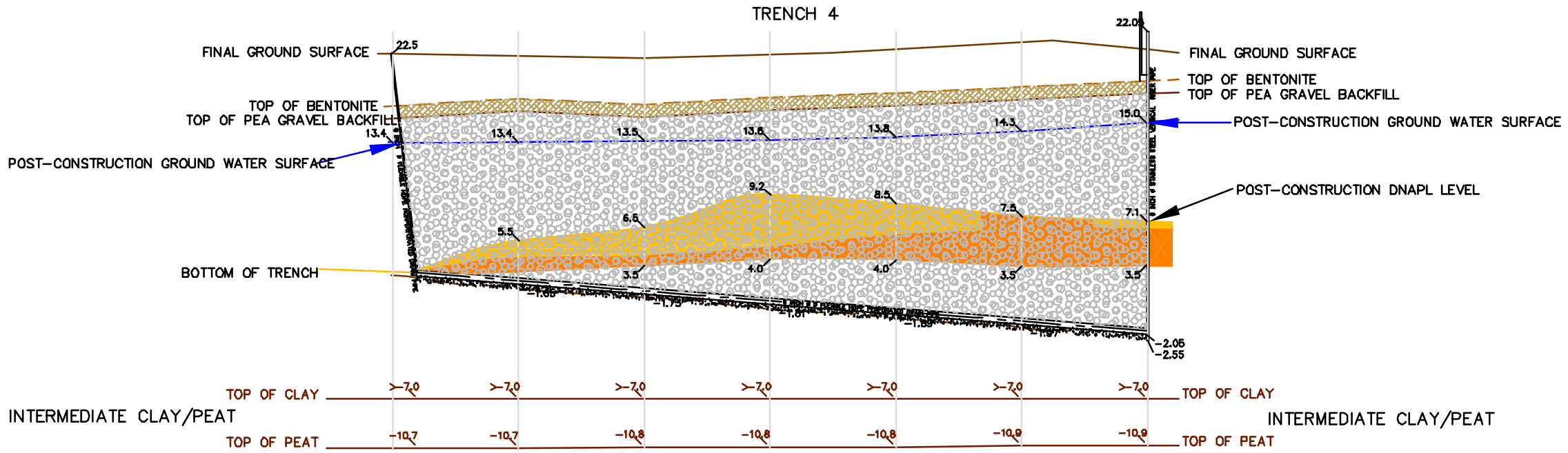

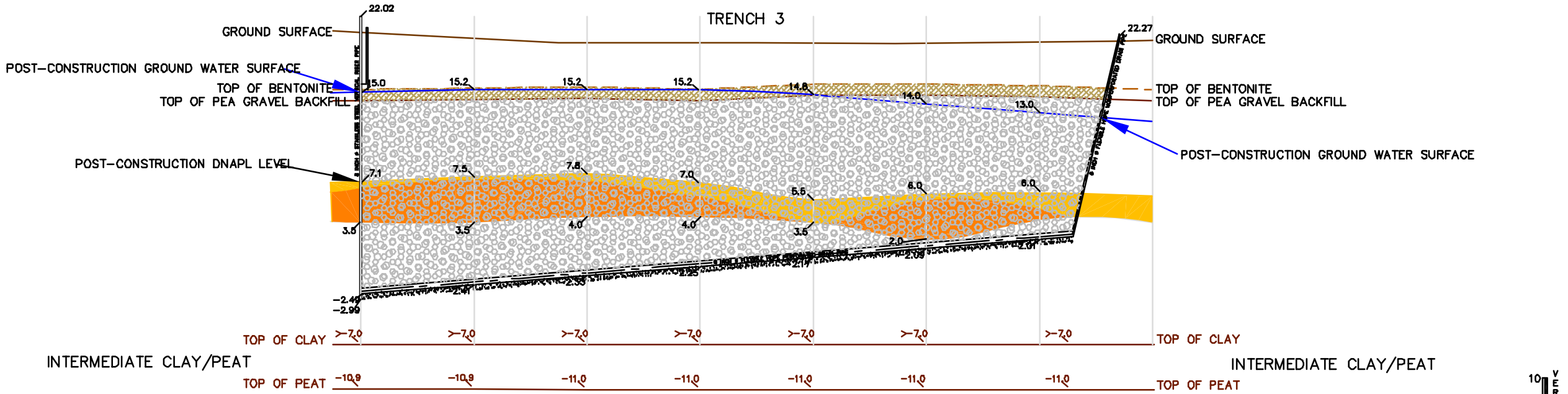

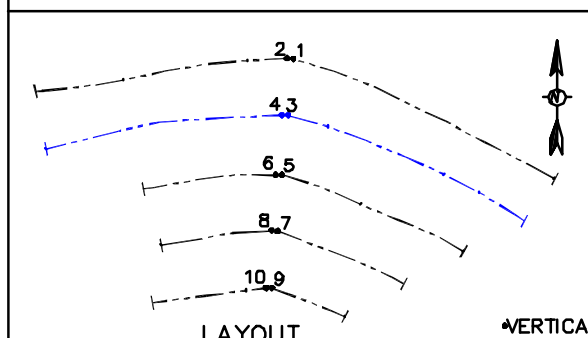

LEGEND

-11.0 GEOLOGIC MARKER GROUND SURFACES (FEET NGVD)

-10.0 PIPE SET GROUND SURFACES (FEET NGVD)

PRE-CONSTRUCTION GROUNDWATER SURFACE

GRAVEL FILL

PRE-CONSTRUCTION LOCATION OF SILTY SAND

SAND BASE

PRE-CONSTRUCTION LOCATION OF SILTY SAND SATURATED WITH DNAPL

BENTONITE FILL

NOTES:

DRAIN PIPE SLOPE: 2.0%
PRE-CONSTRUCTION
WATER LEVELS MEASURED APRIL 7, 1996 (FEET NGVD)
POST-CONSTRUCTION WATER LEVELS MEASURED MAY 19, 2000
CLEAN-OUT DETAIL ON C-27
VAULT DETAIL ON C-27
CROSS-SECTIONAL VIEW OF TRENCH ON C-20
RISER DETAIL ON C-27

VERTICAL SCALE 10 5 0

0 20 40
SCALE IN FEET

VERTICAL EXAGGERATION RATIO: 4

REVISIONS

REV.	DATE	DRWN	CHKD	REMARKS
1	1/4/99	R.T.F.	T.J.O.	DNAPL TRENCH RELOCATION
2	4/29/00	T.E.P.	T.J.O.	AS-BUILT CONSTRUCTION

Tetra Tech EM Inc.

DESIGNED BY: D.A.R.
DRAWN BY: R.T.F.
CHECKED BY: D.A.R.
RE-CHECKED BY: T.J.O.
APPROVED BY: T.J.O.
DATE: 9/28/98

ELECTRONIC COPY OF ORIGINAL DOCUMENT. NOT TO BE USED FOR CONSTRUCTION PURPOSES, RECORDATION, CONVEYANCE, SALES, OR AS THE BASIS FOR THE ISSUANCE OF A PERMIT.

TIMOTHY J. OLIVER
LA. P.E. # 28068
5/25/00
TETRA TECH EM INC.

MADISONVILLE CREOSOTE WORKS
MADISONVILLE, ST. TAMMANY, LOUISIANA

DETAILS, CROSS-SECTION VIEW DNAPL Recovery Trench 3 and 4 Installation Elevations

EPA

WORK ASSIGNMENT NO.: 026-RA-RA-06AJ

DRAWING NO.: C-23

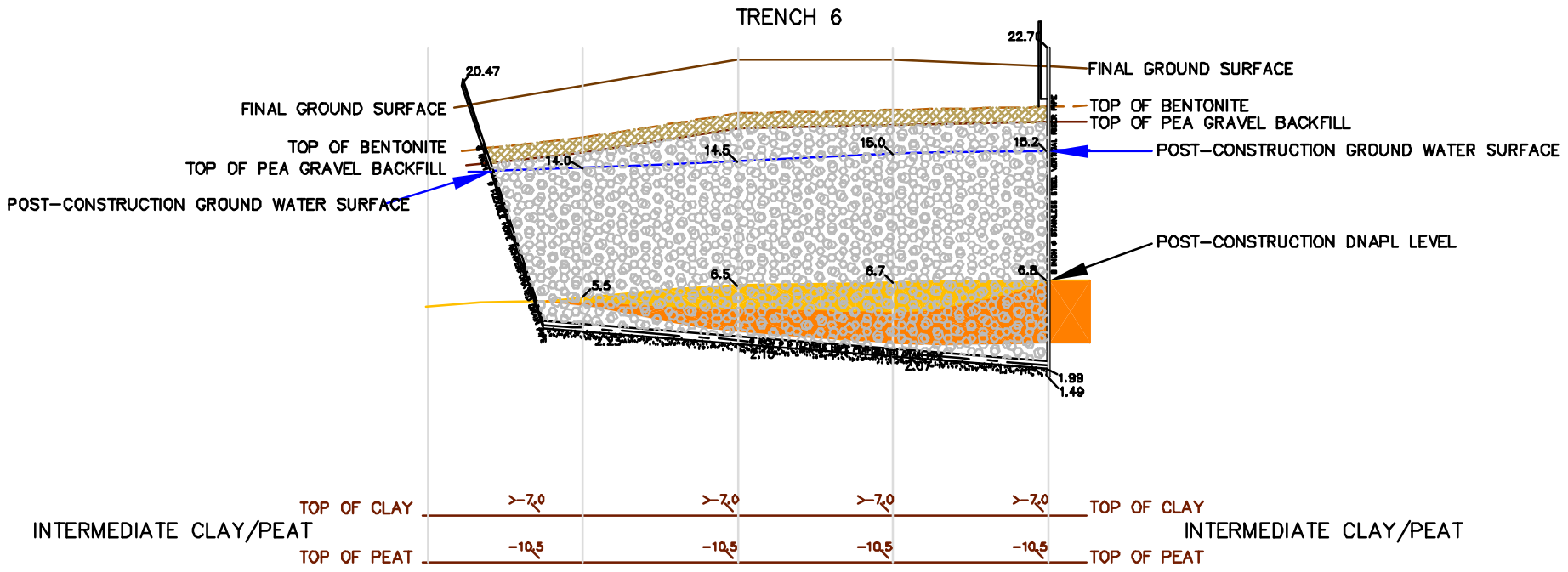

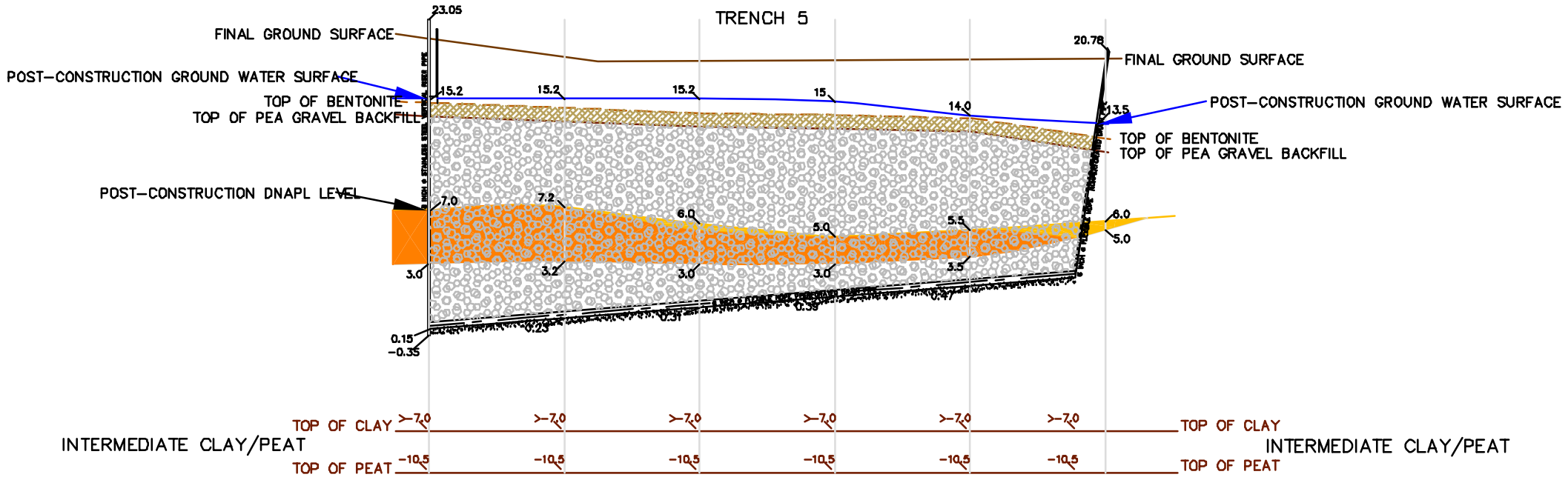

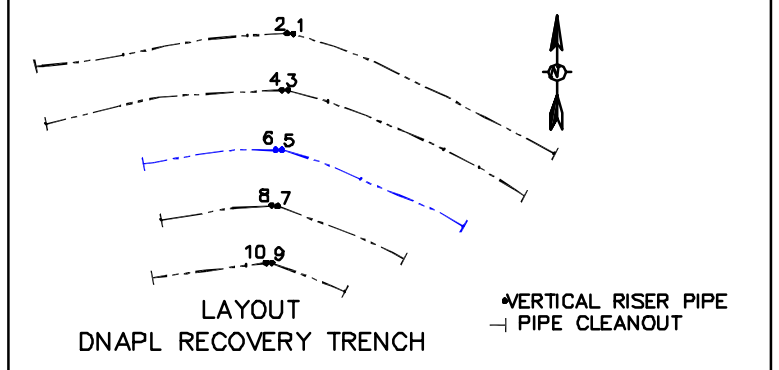

LEGEND

-11.0 GEOLOGIC MARKER GROUND SURFACES (FEET NGVD)

-10.0 PIPE SET GROUND SURFACES (FEET NGVD)

PRE-CONSTRUCTION GROUND WATER SURFACE

GRAVEL FILL

SAND BASE

BENTONITE FILL

PRE-CONSTRUCTION LOCATION OF SILTY SAND

PRE-CONSTRUCTION LOCATION OF SILTY SAND SATURATED WITH DNAPL

NOTES:

DRAIN PIPE SLOPE: 2.0%
PRE-CONSTRUCTION
WATER LEVELS MEASURED APRIL 7, 1996 (FEET NGVD)
POST-CONSTRUCTION WATER LEVELS MEASURED MAY 19, 2000
CLEAN-OUT DETAIL ON C-27
VAULT DETAIL ON C-27
CROSS-SECTIONAL VIEW OF TRENCH ON C-20
RISER DETAIL ON C-27

VERTICAL EXAGGERATION

10
5
0

0 20 40
SCALE IN FEET

VERTICAL EXAGGERATION RATIO: 4

REVISIONS

REV.	DATE	DRWN	CHKD	REMARKS
1	1/4/98	R.T.F.	T.J.O.	DNAPL TRENCH RELOCATION
2	4/29/98	T.E.P.	T.J.O.	AS-BUILT CONSTRUCTION

Tetra Tech EM Inc.

DESIGNED BY: D.A.R.
DRAWN BY: R.T.F.
CHECKED BY: D.A.R.
RE-CHECKED BY: T.J.O.
APPROVED BY: T.J.O.
DATE: 9/28/98

ELECTRONIC COPY OF ORIGINAL DOCUMENT. NOT TO BE USED FOR CONSTRUCTION, BIDDING, RECORDATION, CONVEYANCE, SALES, OR AS THE BASIS FOR THE ISSUANCE OF A PERMIT.

TIMOTHY J. OLIVER
LA. P.E. # 28065
5/25/00
TETRA TECH EM INC.

MADISONVILLE CREOSOTE WORKS
MADISONVILLE, ST. TAMMANY, LOUISIANA

DETAILS, CROSS-SECTION VIEW
DNAPL Recovery Trench 5 and 6
Installation Elevations

EPA

WORK ASSIGNMENT NO.:
026-RA-RA-06AJ

DRAWING NO.:
C-24

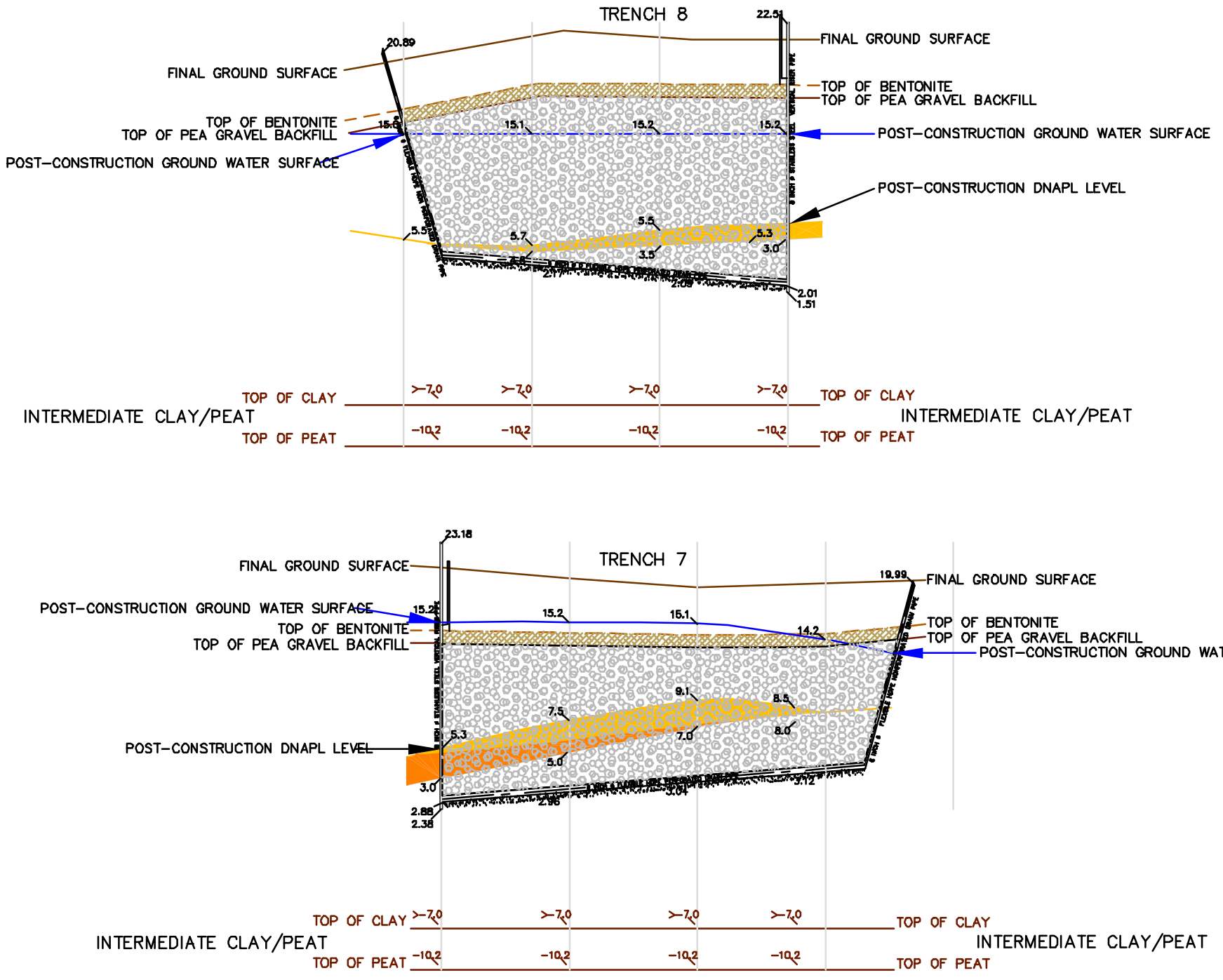

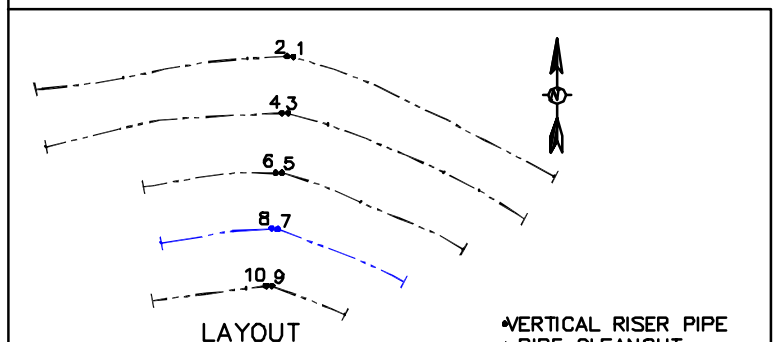

LEGEND

-11.0 GEOLOGIC MARKER GROUND SURFACES (FEET NGVD)

-10.0 PIPE SET GROUND SURFACES (FEET NGVD)

PRE-CONSTRUCTION GROUND WATER SURFACE

GRAVEL FILL

SAND BASE

BENTONITE FILL

PRE-CONSTRUCTION LOCATION OF SILTY SAND

PRE-CONSTRUCTION LOCATION OF SILTY SAND SATURATED WITH DNAPL

NOTES:

DRAIN PIPE SLOPE: 2.0%
PRE-CONSTRUCTION
WATER LEVELS MEASURED APRIL 7, 1996 (FEET NGVD)
POST-CONSTRUCTION WATER LEVELS MEASURED MAY 19, 2000
CLEAN-OUT DETAIL ON C-27
VAULT DETAIL ON C-27
CROSS-SECTIONAL VIEW OF TRENCH ON C-20
RISER DETAIL ON C-27

0 20 40
SCALE IN FEET

VERTICAL EXAGGERATION RATIO: 4

REVISIONS

REV.	DATE	DRWN	CHKD	REMARKS
1	1/4/99	R.T.F.	T.J.O.	DNAPL TRENCH RELOCATION
2	4/29/99	T.E.P.	T.J.O.	AS-BUILT CONSTRUCTION

Tetra Tech EM Inc.

DESIGNED BY: D.A.R.
DRAWN BY: R.T.F.
CHECKED BY: D.A.R.
RE-CHECKED BY: T.J.O.
APPROVED BY: T.J.O.
DATE: 9/28/98

ELECTRONIC COPY OF ORIGINAL DOCUMENT. NOT TO BE USED FOR CONSTRUCTION, BIDDING, RECORDATION, CONVEYANCE, SALES, OR AS THE BASIS FOR THE ISSUANCE OF A PERMIT.

TIMOTHY J. OLIVER
LA. P.E. # 28005
5/25/00
TETRA TECH EM INC.

MADISONVILLE CREOSOTE WORKS
MADISONVILLE, ST. TAMMANY, LOUISIANA

DETAILS, CROSS-SECTION VIEW DNAPL Recovery Trench 7 and 8 Installation Elevations

EPA

WORK ASSIGNMENT NO.: 026-RA-RA-06AJ

DRAWING NO.: C-25

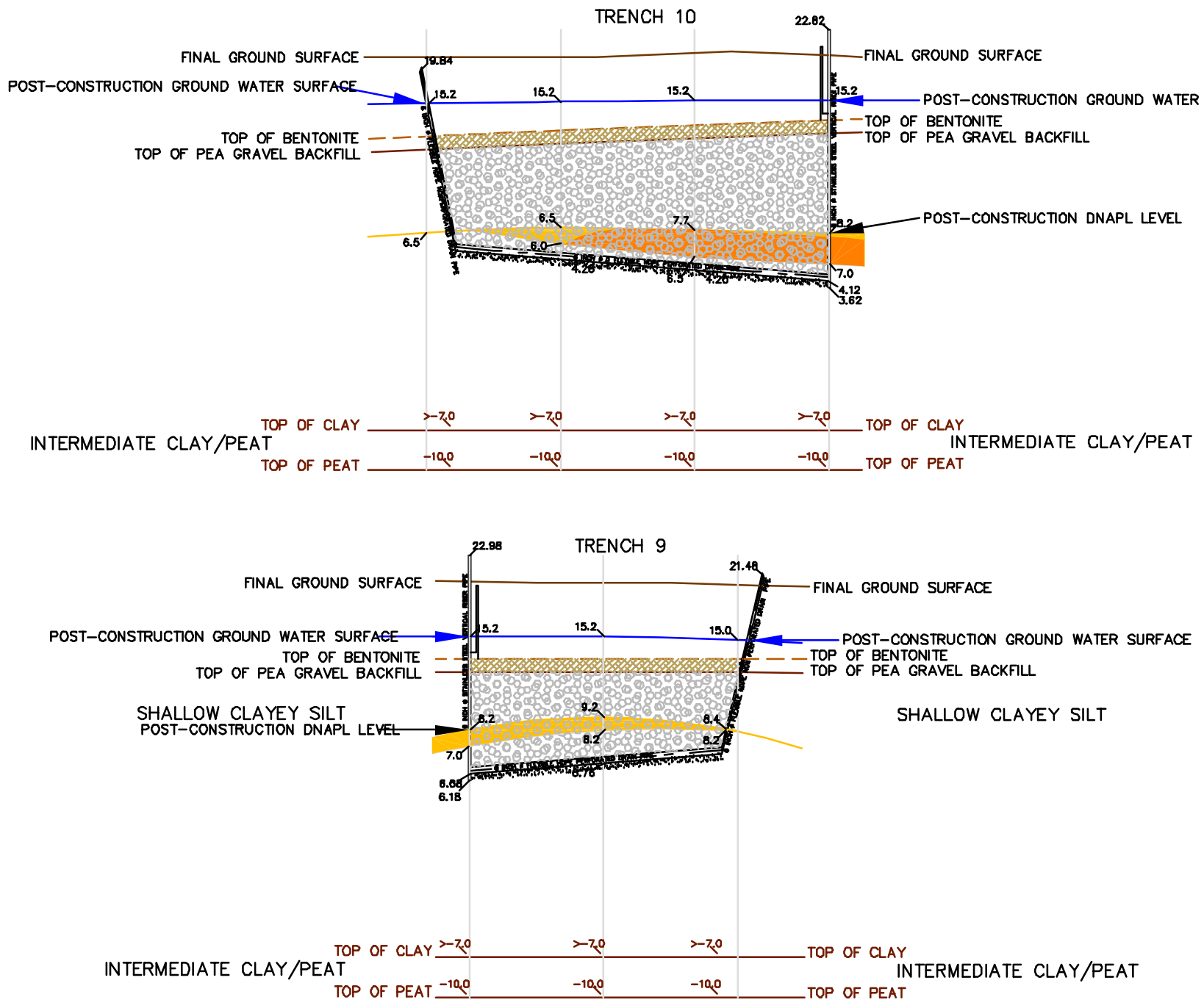

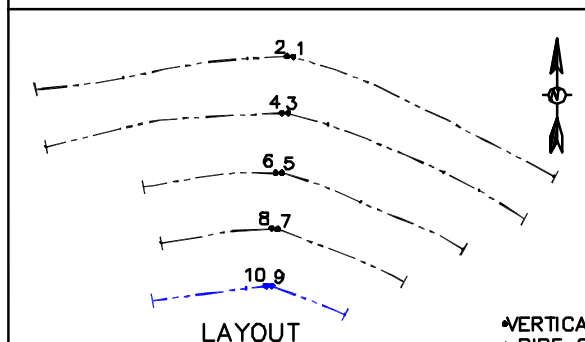

LEGEND

-11.0 GEOLOGIC MARKER GROUND SURFACES (FEET NGVD)

-10.0 PIPE SET GROUND SURFACES (FEET NGVD)

PRE-CONSTRUCTION GROUND WATER SURFACE

GRAVEL FILL

SAND BASE

BENTONITE FILL

PRE-CONSTRUCTION LOCATION OF SILTY SAND

PRE-CONSTRUCTION LOCATION OF SILTY SAND SATURATED WITH DNAPL

NOTES:

DRAIN PIPE SLOPE: 2.0%
PRE-CONSTRUCTION
WATER LEVELS MEASURED APRIL 7, 1996 (FEET NGVD)
POST-CONSTRUCTION WATER LEVELS MEASURED MAY 19, 2000
CLEAN-OUT DETAIL ON C-27
VAULT DETAIL ON C-27
CROSS-SECTIONAL VIEW OF TRENCH ON C-20
RISER DETAIL ON C-27

0 20 40
SCALE IN FEET

VERTICAL EXAGGERATION RATIO: 4

REVISIONS

REV.	DATE	DRWN	CHKD	REMARKS
1	1/4/99	R.T.F.	T.J.O.	DNAPL TRENCH RELOCATION
2	4/29/99	T.E.P.	T.J.O.	AS-BUILT CONSTRUCTION

Tetra Tech EM Inc.

DESIGNED BY: D.A.R. RE-CHECKED BY: T.J.O.
DRAWN BY: R.T.F. APPROVED BY: T.J.O.
CHECKED BY: D.A.R. DATE: 9/28/98

ELECTRONIC COPY OF ORIGINAL DOCUMENT. NOT TO BE USED FOR CONSTRUCTION, BIDDING, RECORDATION, CONVEYANCE, SALES, OR AS THE BASIS FOR THE ISSUANCE OF A PERMIT.

TIMOTHY J. OLIVER
LA. P.E. # 28085
5/25/00
TETRA TECH EM INC.

MADISONVILLE CREOSOTE WORKS
MADISONVILLE, ST. TAMMANY, LOUISIANA

DETAILS, CROSS-SECTION VIEW, DNAPL Recovery Trench 9 and 10 Installation Elevations

EPA

WORK ASSIGNMENT NO.: 026-RA-RA-06AJ

DRAWING NO.: C-26

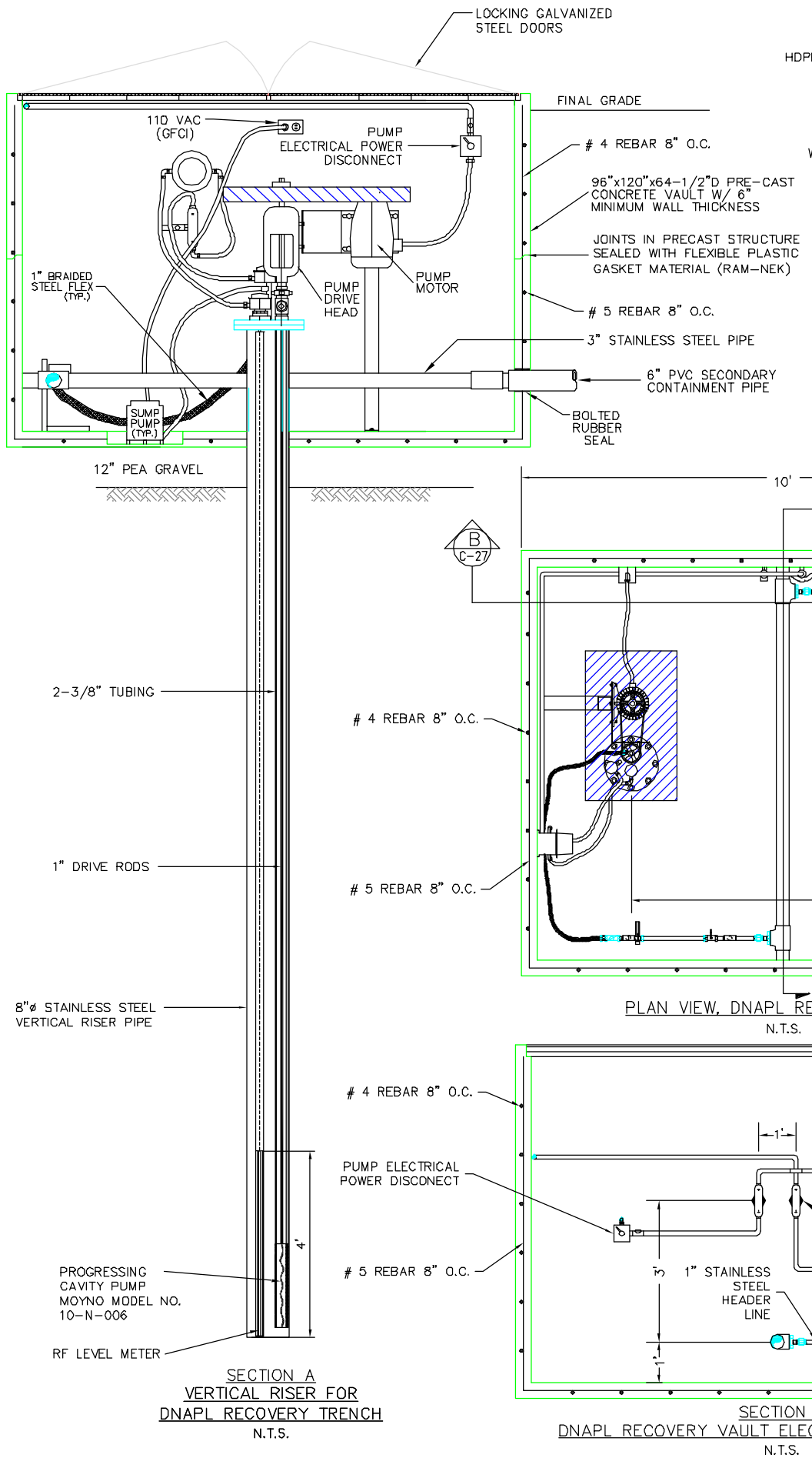

SECTION A
VERTICAL RISER FOR
DNAPL RECOVERY TRENCH
N.T.S.

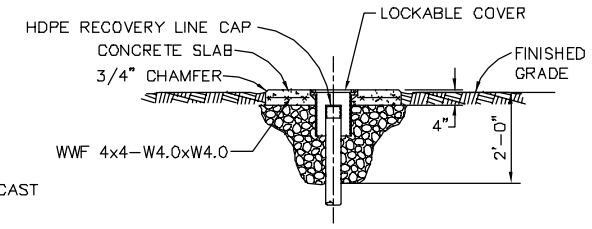

VAULTS FOR HDPE RECOVERY
LINE CLEANOUTS
N.T.S.

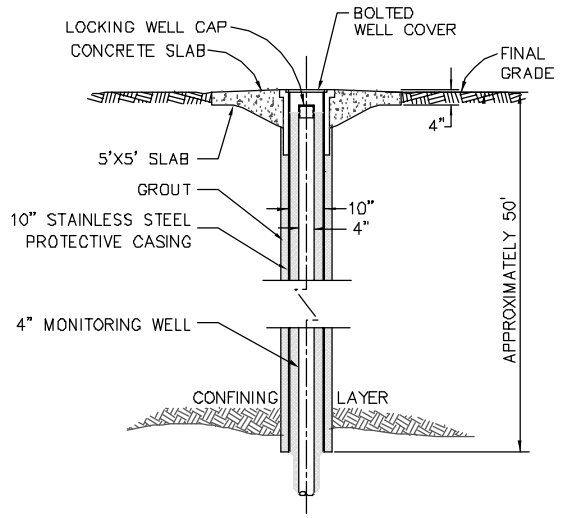

PROTECTIVE CASING FOR DEEP
GROUND WATER MONITORING WELL, RA5
N.T.S.

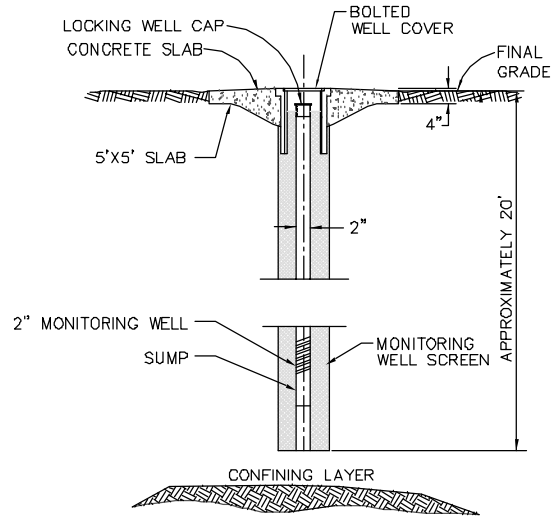

GROUND WATER MONITORING WELL
CONSTRUCTION DETAIL
N.T.S.

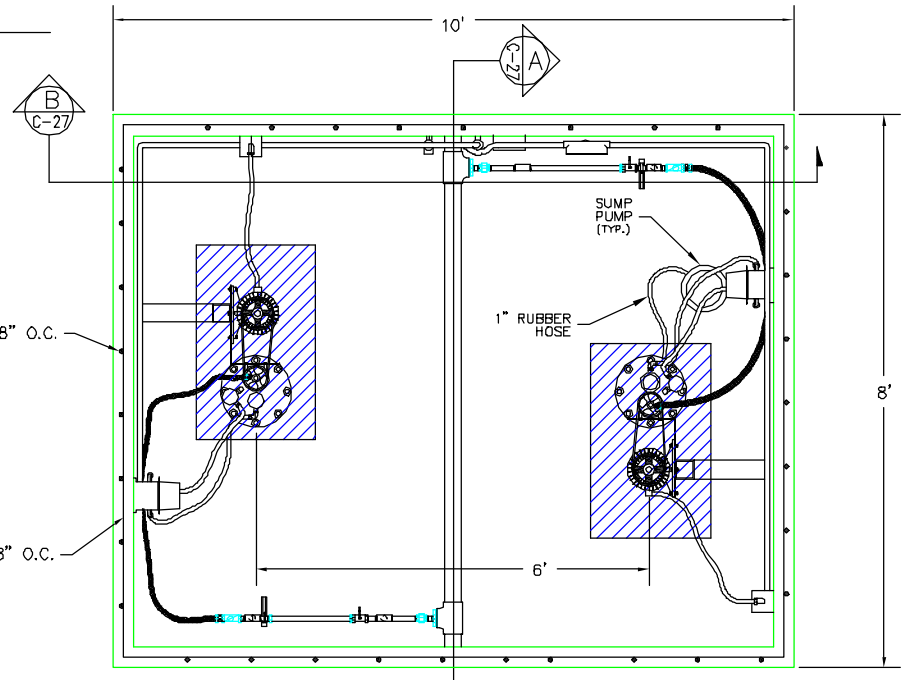

PLAN VIEW, DNAPL RECOVERY VAULT
N.T.S.

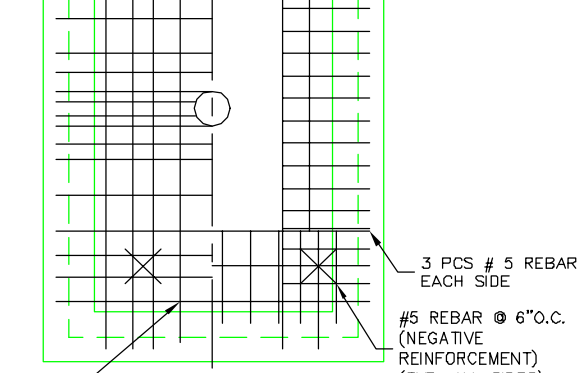

REINFORCING PLAN BOTTOM SLAB
N.T.S.

SECTION B
DNAPL RECOVERY VAULT ELECTRICAL LAYOUT (TYP.)
N.T.S.

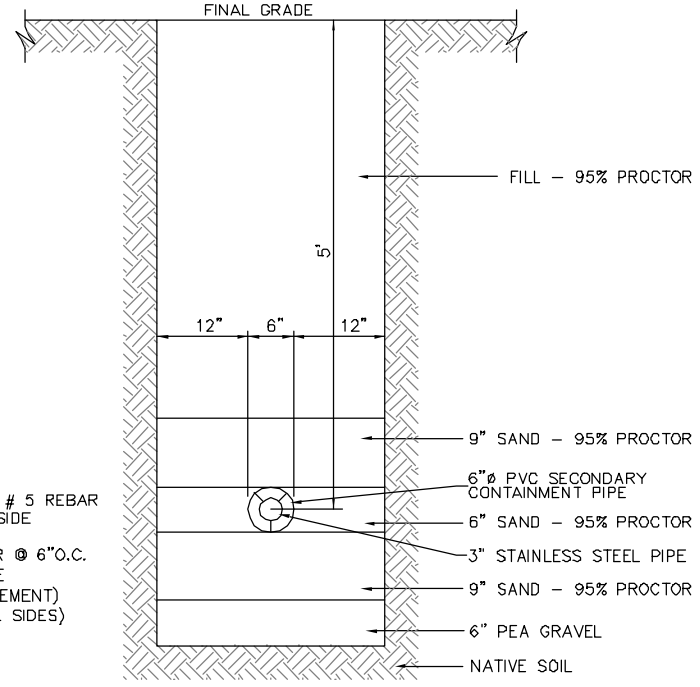

DNAPL TRANSFER PIPE TRENCHING DETAIL
N.T.S.

NOTES:
Reinforcing steel to meet ASTM A 615 Grade 60
#5 and #4 concrete 4000 PSI in 28 days.
Reinforcing AASHTO H20-44 loading joint between pre cast structure sealed with RAM-NEK™ gasket material structure designed in accordance with ASTM C 857 and ACI 318 where applicable.

Special Notice:

1. Precast Vault design by B. Schultz, P.E., Brooks Products, Inc., LaPlace, LA. Job 990715-01, Sheet 1 of 1. July 15, 1999.
2. Sealing of the drawing by Tetra Tech EM Inc. does not imply or constitute that the Tetra Tech EM Inc. engineer is resposible for the design of the Precast Concrete Vaults as furnished by Brooks Products, Inc. The Tetra Tech EM Inc. engineer is the "Engineer of Record" for the project. Only the construction of the building in accordance with the Brooks Products, Inc. design is included.

REVISIONS			
REV.	DATE	DRWN	CHKD	REMARKS
1	3/14/03	T.J.O.		ADDED INTERMEDIATE GROUNDWATER MONITORING WELL
1	6/04/03	T.J.O.		REVISED AS-BUILT CONSTRUCTION (WWTP MODIFICATIONS)

Tetra Tech EM Inc.

DESIGNED BY: D.A.R.
DRAWN BY: R.T.F.
CHECKED BY: D.A.R.
RE-CHECKED BY: T.J.O.
APPROVED BY: T.J.O.
DATE: 9/28/98

MADISONVILLE CREOSOTE WORKS
MADISONVILLE, ST. TAMMANY, LOUISIANA

AS-BUILT DETAILS, CROSS-SECTION VIEWS
DNAPL Recovery Vertical Risers, Vaults, Cleanouts, Transfer Piping, and Monitoring Wells

EPA
WORK ASSIGNMENT NO.:
026-RA-RA-06AJ
DRAWING NO.:
C-27

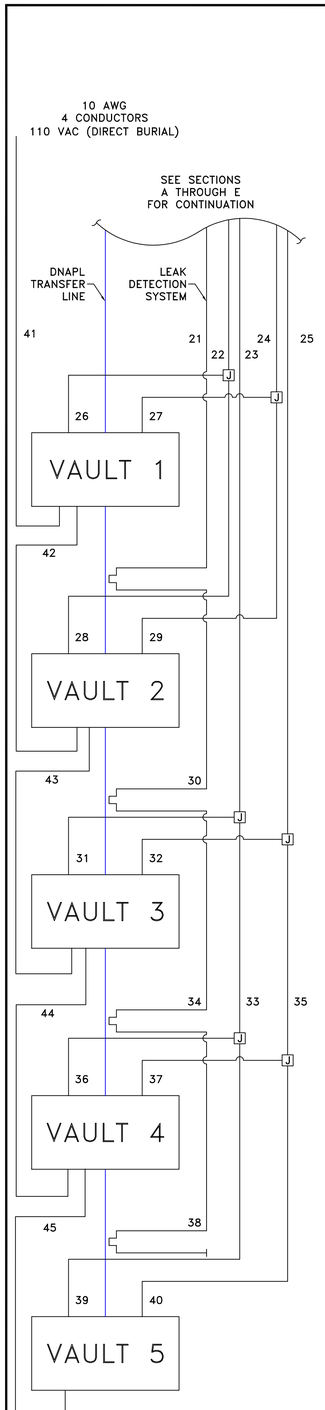

DNAPL VAULT ELECTRICAL CONDUIT DETAILS

N.T.S.

NOTE:
SEE E-5B FOR LEAK DETECTION AND VAULT ELECTRICAL DETAILS.

SECTION	CABLING
1	8-3/C SIGNAL CA (WHITE, BLACK RED)
2	14-2/C SIGNAL CA (GREY) (2 NOT USED)
3	18-2/C SIGNAL CA (GREY)
4	16-#10 (BLACK)
5	24-#10 (BLACK)
6	7-3/C SIGNAL CA (WHITE, BLACK RED)
7	14-2/C SIGNAL CA (GREY) (2 NOT USED)
8	18-2/C SIGNAL CA (GREY)
9	16-#10 (BLACK)
10	24-#10 (BLACK)
11	6-3/C SIGNAL CA (WHITE, BLACK RED)
12	14-2/C SIGNAL CA (GREY) (2 NOT USED)
13	18-2/C SIGNAL CA (GREY)
14	16-#10 (BLACK)
15	24-#10 (BLACK)
16	5-3/C SIGNAL CA (WHITE, BLACK RED)
17	14-2/C SIGNAL CA (GREY) (2 NOT USED)
18	18-2/C SIGNAL CA (GREY)
19	16-#10 (BLACK)
20	24-#10 (BLACK)
21	4-3/C SIGNAL CA (WHITE, BLACK RED)
22	14-2/C SIGNAL CA (GREY) (2 NOT USED)
23	18-2/C SIGNAL CA (GREY)
24	16-#10 (BLACK)
25	24-#10 (BLACK)
26	6-2/C SIGNAL CA (GREY)
27	8-#10 (BLACK)
28	6-2/C SIGNAL CA (GREY)
29	8-#10 (BLACK)
30	3-3/C SIGNAL CA (WHITE, BLACK, RED)
31	6-2/C SIGNAL CA (GREY)
32	8-#10 (BLACK)
33	12-2/C SIGNAL CA (GREY)
34	2-3/C SIGNAL CA (WHITE, BLACK, RED)
35	16-#10 (BLACK)
36	6-2/C SIGNAL CA (GREY)
37	8-#10 (BLACK)
38	1-3/C SIGNAL CA (WHITE, BLACK, RED)
39	6-2/C SIGNAL CA (GREY)
40	8-#10 (BLACK)
41	8-#10 (BLACK)
42	8-#10 (BLACK)
43	8-#10 (BLACK)
44	8-#10 (BLACK)
45	8-#10 (BLACK)

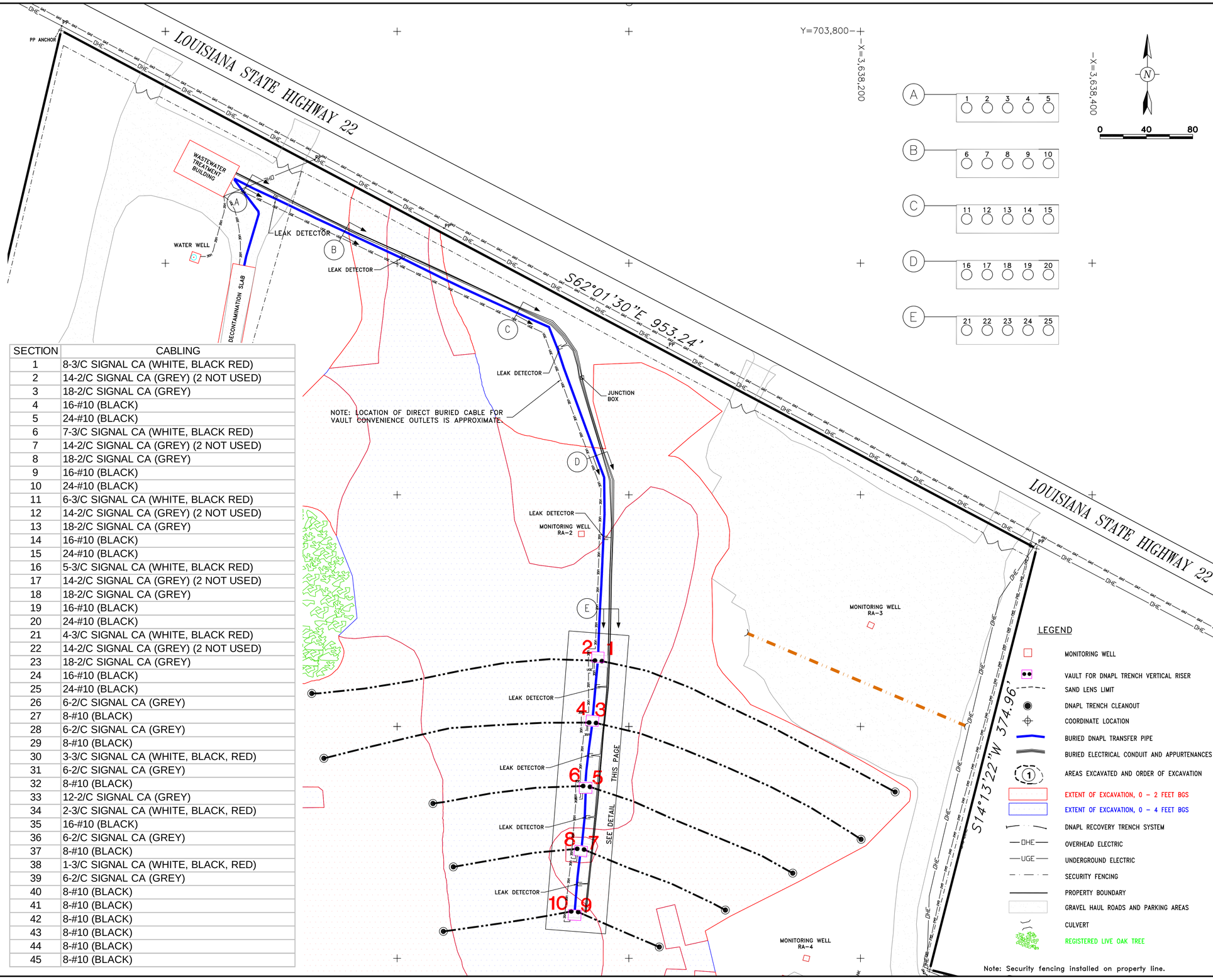

REV.	DATE	DRWN	CHKD	REMARKS
1	5/25/00	JFS	T/O	ASBUILT CONSTRUCTION
1	6/04/01	JSR	MWD	REVISED AS-BUILT CONSTRUCTION (WWTP MODIFICATIONS)

REVISIONS

Tetra Tech EM Inc.

DESIGNED BY: H.A.G.
DRAWN BY: R.T.F.
CHECKED BY: D.A.R.

RECHECKED BY: T.J.O.
APPROVED BY: T.J.O.
DATE: 9/28/98

ELECTRONIC COPY OF ORIGINAL DOCUMENT - NOT TO BE USED FOR CONSTRUCTION, BIDDING, RECORDATION, CONVEYANCE, SALES, OR AS THE BASIS FOR THE ISSUANCE OF A PERMIT.
TIMOTHY J. OLIVER
LA. P.E. # 28068
6/04/01
TETRA TECH EM INC.

MADISONVILLE CREOSOTE WORKS
MADISONVILLE, ST. TAMMANY, LOUISIANA

ELECTRICAL SITE PLAN

EPA

WORK ASSIGNMENT NO.:
026-RA-RA-06AJ

DRAWING NO.:
E-1

WASTEWATER TREATMENT SYSTEM

SCALE: 1" = 2'

NOTES:
1.) TELEPHONE TERMINAL BOARD MOUNTED IN CONTROL PANEL.
2.) METER SOCKET PER CENTRAL LOUISIANA ELECTRIC CO. (CLECO) REQUIREMENTS. CLECO PROVIDES METER AND SERVICE FROM ELECTRIC UTILITY POLE.
3.) ALL 2/C AND 3/C SIGNAL CABLE IS TWISTED, SHIELDED #18.
4.) CONDUIT 6 FROM CONTROL PANEL IS EMPTY.

SECTION	CABLING
①	3–#14 (BLACK,WHITE,GREEN) 3/4" CONDUIT
②	2–#18 (BLACK, RED) 1" CONDUIT
③	3–#14 (BLACK,WHITE,GREEN) 1–2/C #18 SIGNAL CA (GREY) 3/4" CONDUIT
④	1–2/C#18 SIGNAL CA (BLACK) 2–#14 (BLACK, WHITE) 2–2/C #18 SIGNAL CA (GREY) 3/4" CONDUIT
⑤	2– #18 (BLACK, RED) 1" CONDUIT
⑥	1–2/C #18 SIGNAL CA (GREY) 1– #14 (WHITE) 1" CONDUIT
⑦	PP2–14;3–#10 (BLACK) 1–#12 (GREEN) 1" CONDUIT
⑧	PP2–14;3–#10 (BLACK) 1–#12 (GREEN) 4–#14 (WHITE,RED,YELLOW,BLUE) 1–2/C #18 SIGNAL CA (GREY) 3/4" CONDUIT
⑨	3–#14 (YELLOW, ORANGE, BROWN) 3–2/C #14 SIGNAL CA (BLACK) 3/4" CONDUIT
⑩	PP2–8 AND 19;8–#10 (BLACK) 1–#12 (GREEN) 3–#14 (RED,YELLOW,BLUE) 1" CONDUIT
⑪	3–2/C #18 SIGNAL CA (GREY, GREY, WHITE) 1" CONDUIT
⑫	PP2–13–#10 (BLACK) 1–#12 (GREEN) 3–#14 (RED,YELLOW,BLUE) 1" CONDUIT
⑬	PP2–2;3–#10 (BLACK) 2–2/C #18 SIGNAL CA (GREY) 1" CONDUIT
⑭	PP2–13';3–#10 (BLACK) 1–#12 (GREEN) 1–2/C #18 SIGNAL CA (GREY) 5–#14 (BLACK,WHITE,RED,YELLOW,BLUE) 1" CONDUIT
⑮	3–#14 (BLACK,WHITE,GREEN) 2–2/C #18 SIGNAL CA (GREY) 3/4" CONDUIT
⑯	1–2/C #18 SIGNAL CA (GREY) 1" CONDUIT
⑰	2–#14 (BLACK,WHITE) 1–2/C #18 SIGNAL CA (GREY) 3/4" CONDUIT
⑱	1–2/C #18 SIGNAL CA (BLACK) 3/4" CONDUIT
⑲	1–2/C #18 SIGNAL CA (GREY) 3–#14 (BLACK, GREEN, WHITE) 3/4" CONDUIT
⑳	2–2/C #18 SIGNAL CA (WHITE,GREY) 3/4" CONDUIT
㉑	1–2/C #18 SIGNAL CA (WHITE) 1" CONDUIT
㉒	1–2/C #18 SIGNAL CA (GREY) 1" CONDUIT
㉓	PP2–19;3–#10 (BLACK) 1–#12 (GREEN) 3–#14 (RED,YELLOW,BLUE) 1" CONDUIT
㉔	1–2/C #18 SIGNAL CA (GREY) 1" CONDUIT
㉕	1–2/C #18 SIGNAL CA (GREY) 1" CONDUIT
㉖	1–2/C #18 SIGNAL CA (GREY) 1" CONDUIT
㉗	3–#14 (BLACK,GREEN,WHITE) 1" CONDUIT
㉘	1–2/C #14 SIGNAL CA (BLACK) 1" CONDUIT
㉙	2–2/C #14 SIGNAL CA (BLACK) 1" CONDUIT
㉚	3–#14 (PURPLE, BROWN, GREY) 1" CONDUIT
㉛	3–#14 (YELLOW, ORANGE, BROWN) 1" CONDUIT
㉜	1–2/C #14 SIGNAL CA (BLACK) 1" CONDUIT
㉝	7–#14 (GREY, PURPLE, RED, BROWN, BLACK, BLACK) 1" CONDUIT
㉞	1–2/C #18 SIGNAL CA (GREY) 1" CONDUIT
㉟	1–2/C #18 SIGNAL CA (GREY) 1" CONDUIT
㊱	2–2/C #14 (BLACK) 1" CONDUIT

CONTROL ROOM

3#4/0&1#2 GND-2 1 1/2"C
3#2&1#2 GND-1 1 1/2"C
PP2-2&8: 3#10-1"C
21#10-1 1/2"C
DP-8: 3#6-1"C
3#4/0&1#2 GND-2 1 1/2"C
4/0 GROUNDING CONDUCTOR
GROUND ROD (TYP.)
2" CONDUIT FOR TELEPHONE SYSTEM (NOTE 1)
FOR CONTINUATION SEE SHEET E-1
POWER PANEL 2 (PP2)
LIGHTING PANEL (LP)
METER SOCKET (SEE NOTE 2)
FOR CONTINUATION SEE SHEET E-1
DISTRIBUTION PANEL (DP)
ABOVEGROUND PULL BOX
VPAC
CONDUIT 1R
CONDUIT 2R
AUDIBLE AND VISUAL ALARM WITH SWITCH
CONDUIT 1L
CONDUIT 2L
CONDUIT 3L
CONDUIT 4L
CONDUIT 5L
CONDUIT 6L
CONDUIT 7L
CONDUIT 8L
DRAINAGE SUMP
CARBON VESSEL C-3
DNAPL STORAGE TANK T-3
LOCAL ALARM LIGHT
LOCAL AUDIBLE ALARM
PUMP P-17
CARBON VESSEL C-1A
CARBON VESSEL C-1B
LNAPL STORAGE TANK T-5
P-16
PUMP P-14
TANK T-7
PUMP P-15
EQUALIZATION TANK T-1
OIL-WATER SEPARATOR T-2
PUMP P-13
PUMP P-19
SAND FILTER F-1
SAND FILTER F-2
SAND FILTER F-3
BACKWASH TANK T-6
CONDUIT BOX
DRAINAGE SUMP

N

REVISIONS					
REV.	DATE	DRWN	CHKD	REMARKS	
1	8/26/02	JFS	T.J.O.	AS-BUILT CONSTRUCTION	
1	8/04/98	TEP	T.J.O.	REVISED AS-BUILT CONSTRUCTION (WWTP MODIFICATIONS)	

Tetra Tech EM Inc.

DESIGNED BY: M.S.Z.
DRAWN BY: R.T.F.
CHECKED BY: M.S.Z.
RE-CHECKED BY: T.J.O.
APPROVED BY: T.J.O.
DATE: 9/28/98

ELECTRONIC COPY OF ORIGINAL DOCUMENT. NOT TO BE USED FOR CONSTRUCTION, RECORDATION, CONVEYANCE, SALES, OR AS THE BASIS FOR THE ISSUANCE OF A PERMIT.

TIMOTHY J. OLIVER
LA P.E. # 28068
6/04/01
TETRA TECH EM INC.

MADISONVILLE CREOSOTE WORKS
MADISONVILLE, ST. TAMMANY, LOUISIANA
WASTEWATER TREATMENT PLANT
PLAN VIEW
Electrical Power

EPA

WORK ASSIGNMENT NO.: 026-RA-RA-06AJ

DRAWING NO.: E-2

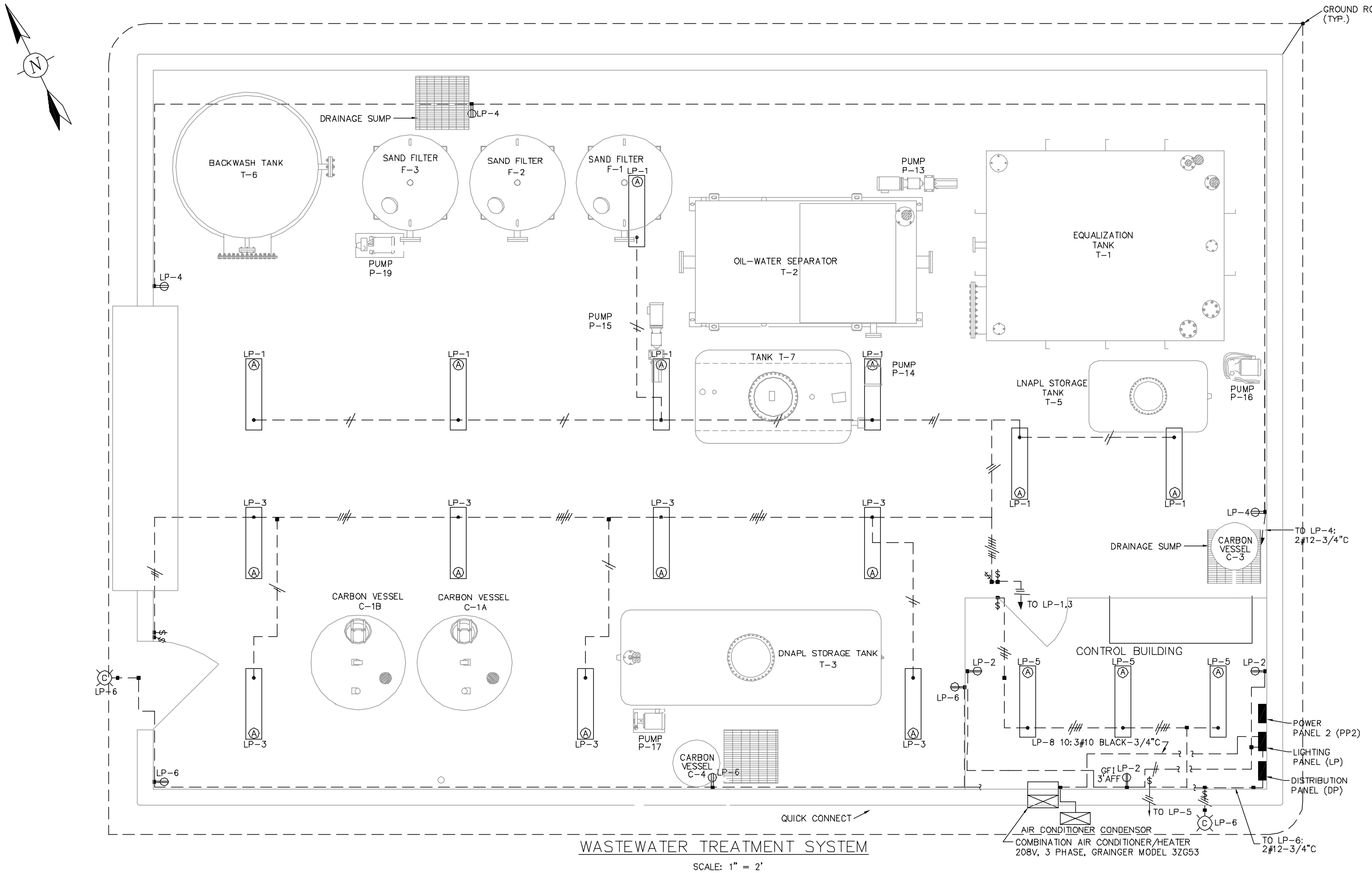

WASTEWATER TREATMENT SYSTEM

SCALE: 1" = 2'

REVISIONS

REV.	DATE	DRWN	REMARKS
1	9/25/01	T.J.O.	AS-BUILT CONSTRUCTION
1	6/04/01	T.J.O	REVISED AS-BUILT CONSTRUCTION (WWTP MODIFICATIONS)

Tetra Tech EM Inc.

DESIGNED BY: M.S.Z.
DRAWN BY: R.T.F.
CHECKED BY: M.S.Z.
RE-CHECKED BY: T.J.O.
APPROVED BY: T.J.O.
DATE: 9/28/98

ELECTRONIC COPY OF ORIGINAL DOCUMENT. NOT TO BE USED FOR CONSTRUCTION, BIDDING, RECORDATION, CONVEYANCE, SALES, OR AS THE BASIS FOR THE ISSUANCE OF A PERMIT.

TIMOTHY J. OLIVER
LA. P.E. # 28068
6/04/01
TETRA TECH EM INC.

MADISONVILLE CREOSOTE WORKS
MADISONVILLE, ST. TAMMANY, LOUISIANA

WASTEWATER TREATMENT PLANT
PLAN VIEW
Electrical Lighting

EPA

WORK ASSIGNMENT NO.:
026-RA-RA-06AJ

DRAWING NO.:
E-3

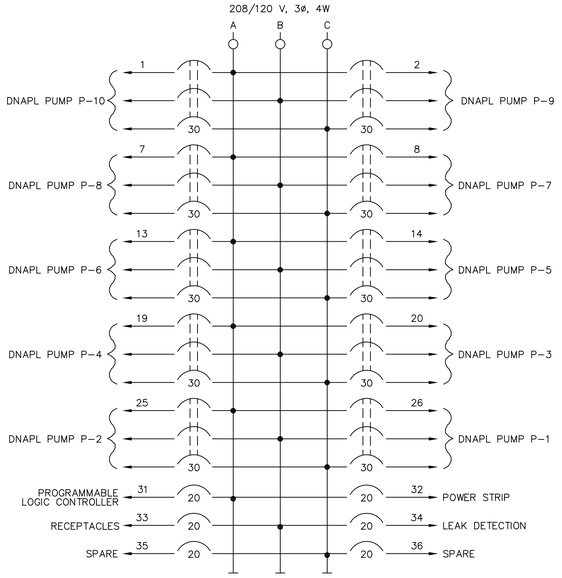

POWER PANEL 1 (PP1)
36 CIRCUIT PANEL BOARD WITH
225 AMP MAINS, MAIN LUGS ONLY,
10: 30A, 3P BREAKERS AND
6: 20A, 1P BREAKER

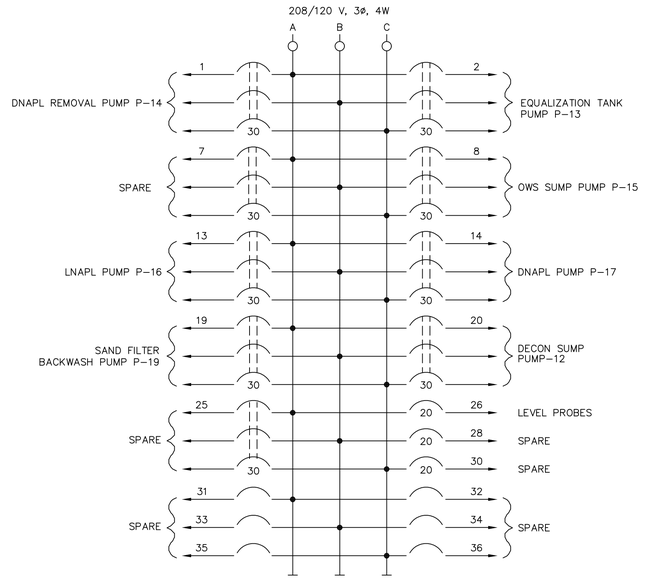

POWER PANEL 2 (PP2)
36 CIRCUIT PANEL BOARD WITH
225 AMP MAINS, MAIN LUGS ONLY,
8: 30A, 3P BREAKERS
3: 20A, 1P BREAKERS

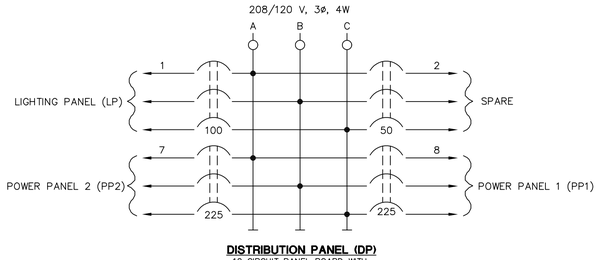

DISTRIBUTION PANEL (DP)
12 CIRCUIT PANEL BOARD WITH
400 AMP MAIN, 400 AMP MAIN BREAKER
2: 225 AMP, 3P BREAKERS
1: 100 AMP, 3P BREAKER
1: 50 AMP, 3P BREAKER

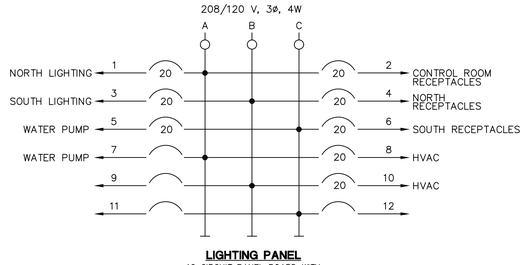

LIGHTING PANEL
12 CIRCUIT PANEL BOARD WITH
100 AMP MAINS, MAIN LUGS ONLY,
7: 20A, 1P BREAKERS

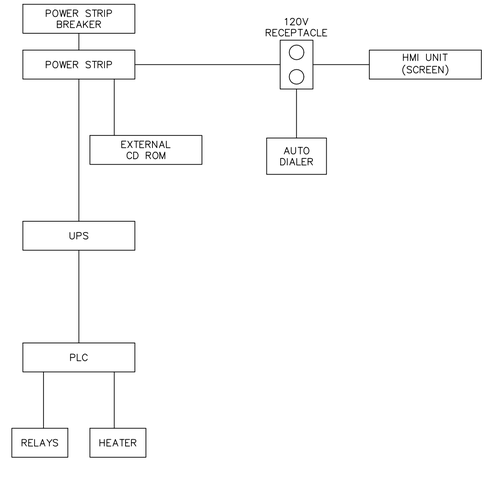

REVISIONS

REV.	DATE	DRWN	CHKD	REMARKS
1	5/25/00	T.E.P.	T.J.O.	AS-BUILT CONSTRUCTION
1	6/04/01	T.E.P.	T.J.O.	REVISED AS-BUILT CONSTRUCTION (WWTP MODIFICATIONS)

Tetra Tech EM Inc.

DESIGNED BY: M.S.Z. | RECHECKED BY: T.J.O.
DRAWN BY: R.T.F. | APPROVED BY: T.J.O.
CHECKED BY: M.S.Z. | DATE: 9/28/98

ELECTRONIC COPY OF ORIGINAL DOCUMENT. NOT TO BE USED FOR CONSTRUCTION, BIDDING, RECORDATION, CONVEYANCE, SALES, OR AS THE BASIS FOR ISSUANCE OF A PERMIT.
TIMOTHY J. OLIVER
LA. P.E. # 28068
6/04/01
TETRA TECH EM INC.

MADISONVILLE CREOSOTE WORKS
MADISONVILLE, ST. TAMMANY, LOUISIANA

ELECTRICAL
ELECTRICAL DISTRIBUTION
PANEL WIRING

EPA

WORK ASSIGNMENT NO.:
026-RA-RA-06AJ

DRAWING NO.:
E-4

MADISONVILLE CREOSOTE WORKS
MADISONVILLE, ST. TAMMANY, LOUISIANA

ELECTRICAL
Schematics and Details

EPA

WORK ASSIGNMENT NO.: 026-RA-RA-06AJ

DRAWING NO.: E-5A

Tetra Tech EM Inc.

DESIGNED BY: M.S.Z.
DRAWN BY: R.T.F.
CHECKED BY: M.S.Z.

RE-CHECKED BY: T.J.O.
APPROVED BY: T.J.O.
DATE: 9/28/98

AS-BUILT CONSTRUCTION

REV.	DATE	DRWN	CHKD	REMARKS
1	8/25/00	E.P.	T.J.O.	

REVISIONS

ELECTRONIC COPY OF ORIGINAL DOCUMENT. NOT TO BE USED FOR CONSTRUCTION, RECORDATION, CONVEYANCE, SALES, OR AS THE BASIS FOR THE ISSUANCE OF A PERMIT.

TIMOTHY J. OLIVER
LA P.E. # 28068
5/25/00
TETRA TECH EM INC.

TYPICAL ELECTRICAL HANDHOLE CONSTRUCTION DETAIL

NOT TO SCALE

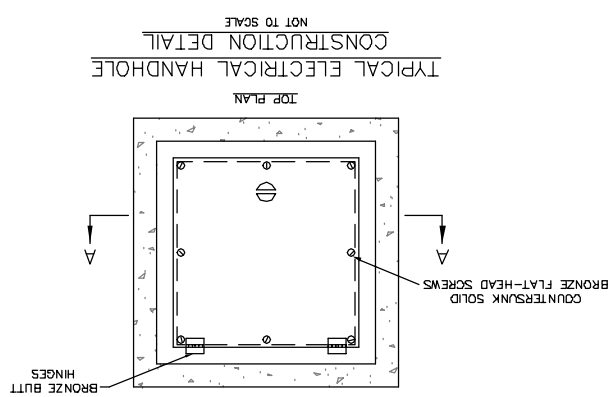

MOTOR STAND AND LOCAL CONTROL

NOT TO SCALE

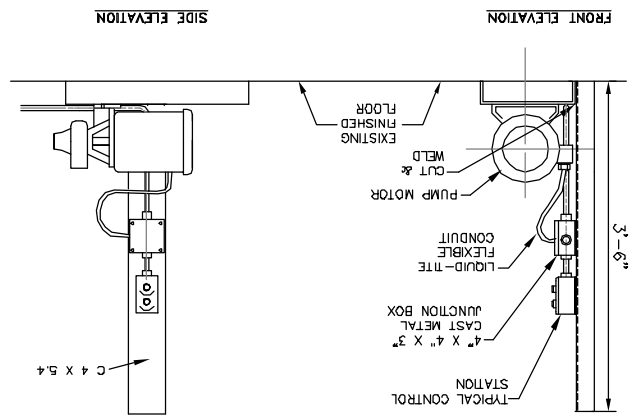

ITEM
SELECTOR SWITCH P-1
SELECTOR SWITCH P-2
SELECTOR SWITCH P-3
SELECTOR SWITCH P-4
SELECTOR SWITCH P-5
SELECTOR SWITCH P-6
SELECTOR SWITCH P-7
SELECTOR SWITCH P-8
SELECTOR SWITCH P-9
SELECTOR SWITCH P-10

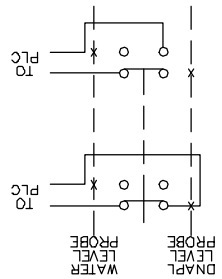

LIGHTING FIXTURE SCHEDULE	
ITEM	DESCRIPTION
(A)	4 FOOT FLUORESCENT INDUSTRIAL FIXTURE WITH (2) 40 WATT LAMPS, 120 V BALLAST, GRAINGER STOCK NUMBER 3Y380 PENDANT MOUNT 10'-6" ABOVE FINISHED FLOOR
(B)	75 WATT, MOTION SENSOR FIXTURE, 120 VAC, 75 WATT, INCANDESCENT. GRAINGER STOCK NUMBER 6W953. MOUNT 1 FOOT ABOVE DOOR.

EQUALIZATION TANK PUMP P-13	
ITEM	CKT NO.
	PP2 - 2

ITEM	CKT NO.
DNAPL PUMP P-1	PP1 - 26
DNAPL PUMP P-2	PP1 - 25
DNAPL PUMP P-3	PP1 - 20
DNAPL PUMP P-4	PP1 - 19
DNAPL PUMP P-5	PP1 - 14
DNAPL PUMP P-6	PP1 - 13
DNAPL PUMP P-7	PP1 - 8
DNAPL PUMP P-8	PP1 - 7
DNAPL PUMP P-9	PP1 - 2
DNAPL PUMP P-10	PP1 - 1

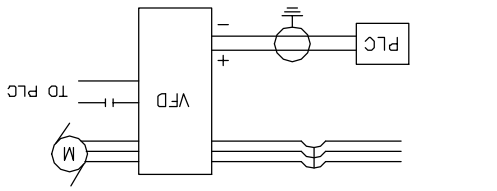

SAND FILLER BACKWASH PUMP P-19	
ITEM	CKT NO.
DNAPL REMOVAL PUMP P-14	PP2 - 1
DNAPL PUMP P-17	PP2 - 14
LNAPL PUMP P-16	PP2 - 13
	PP2 - 19

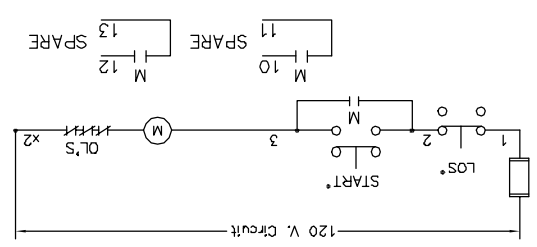

TYPICAL CONDUIT SEAL DETAILS

NOT TO SCALE

SINGLE ENDED TYPE-FOR NEW CONSTRUCTION

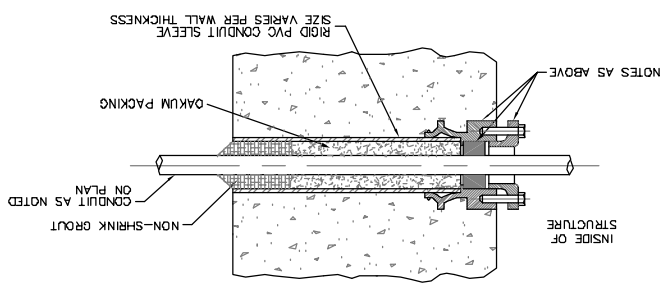

DOUBLE ENDED TYPE-FOR NEW CONSTRUCTION WITH NEMBRANE

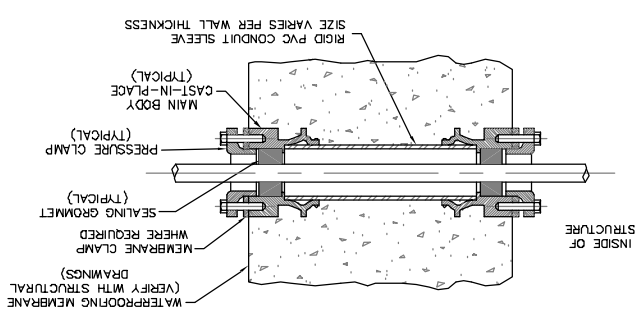

ITEM	CKT NO.
DNAPL PUMP P-10	PP1 - 1
DNAPL PUMP P-9	PP1 - 2
DNAPL PUMP P-8	PP1 - 7
DNAPL PUMP P-7	PP1 - 8
DNAPL PUMP P-6	PP1 - 13
DNAPL PUMP P-5	PP1 - 14
DNAPL PUMP P-4	PP1 - 19
DNAPL PUMP P-3	PP1 - 20
DNAPL PUMP P-2	PP1 - 25
DNAPL PUMP P-1	PP1 - 26

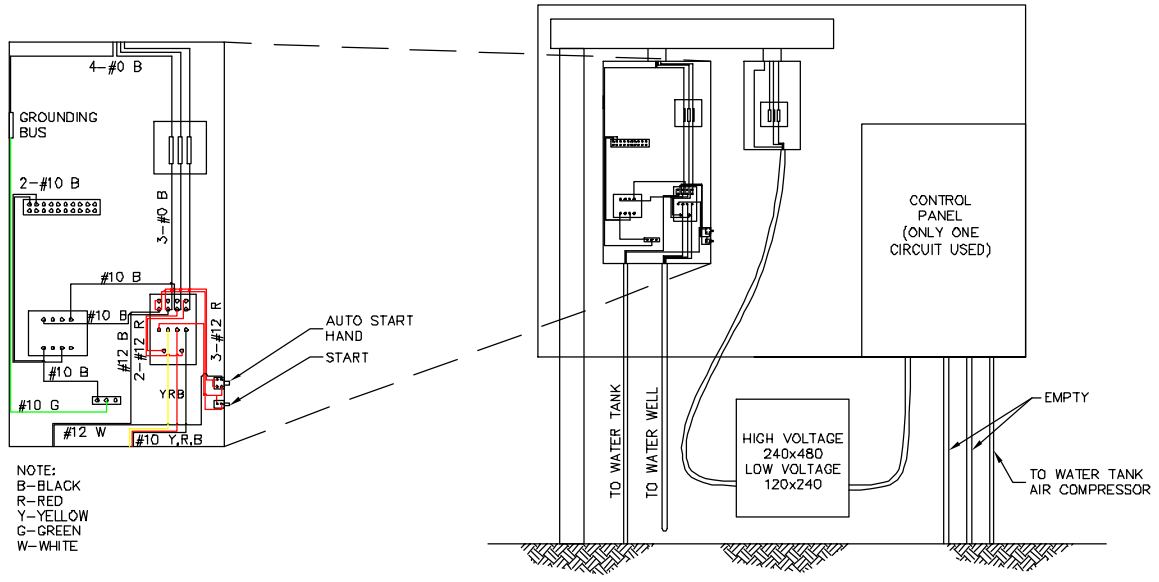

NOTE:
B–BLACK
R–RED
Y–YELLOW
G–GREEN
W–WHITE

THERMAL TREATMENT WATER WELL POWER PANEL
NOT TO SCALE

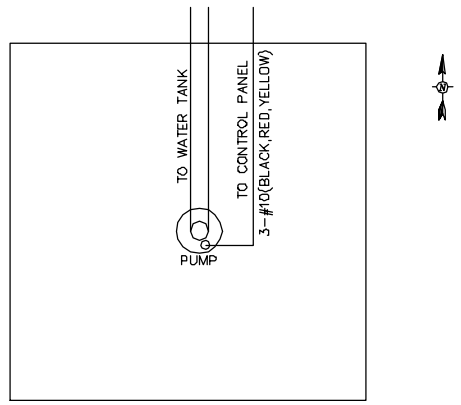

THERMAL TREATMENT WATER WELL ELECTRIC DETAIL PLAN VIEW
NOT TO SCALE

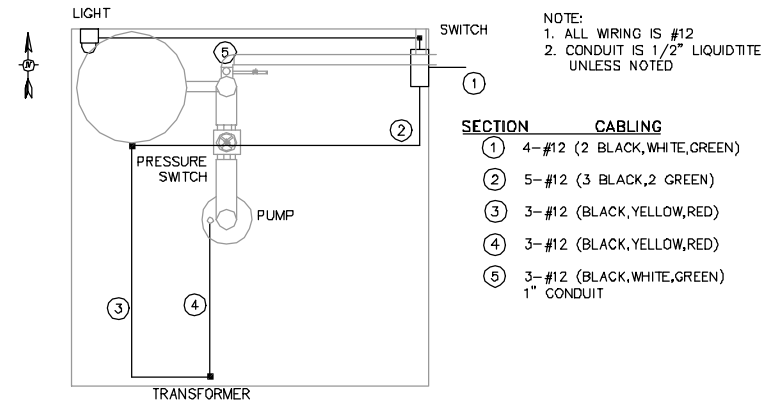

NOTE:
1. ALL WIRING IS #12
2. CONDUIT IS 1/2" LIQUIDTITE UNLESS NOTED

SECTION	CABLING
1	4–#12 (2 BLACK,WHITE,GREEN)
2	5–#12 (3 BLACK,2 GREEN)
3	3–#12 (BLACK,YELLOW,RED)
4	3–#12 (BLACK,YELLOW,RED)
5	3–#12 (BLACK,WHITE,GREEN) 1" CONDUIT

WASTEWATER TREATMENT PLANT WATER WELL
NOT TO SCALE

SECTION	CABLING
1	6–2/C #18 SIGNAL CA (GREY)
2	3–2/C #18 SIGNAL CA (GREY) 1" CONDUIT
3	1–2/C #18 SIGNAL CA (GREY) 1/2" FLEX LINE
4	2–2/C #18 SIGNAL CA (GREY) 1" CONDUIT
5	1–2/C #18 SIGNAL CA (GREY) 1/2" FLEX LINE
6	1–2/C #18 SIGNAL CA (GREY) 1/2" FLEX LINE
7	3–2/C #18 SIGNAL CA (GREY) 1" CONDUIT
8	2–2/C #18 SIGNAL CA (GREY) 1" CONDUIT
9	1–2/C #18 SIGNAL CA (GREY) 1/2" FLEX LINE
10	1–2/C #18 SIGNAL CA (GREY) 1/2" FLEX LINE
11	1–2/C #18 SIGNAL CA (GREY) 1/2" FLEX LINE
12	8–#10 (6 RED,2 GREEN)
13	4–#10 (3 RED,GREEN) 1" CONDUIT
14	4–#10 (3 RED,GREEN) 1" CONDUIT

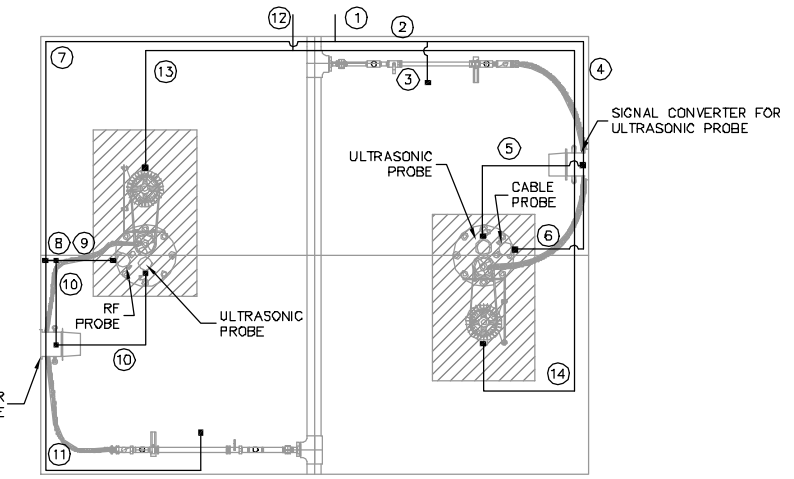

DNAPL RECOVERY VAULT DETAILS
NOT TO SCALE

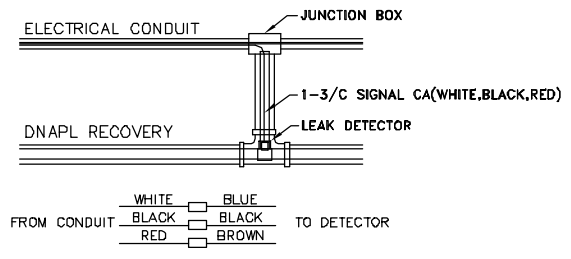

TYPICAL LEAK DETECTION SYSTEM
NOT TO SCALE

REVISIONS

REV.	DATE	DRWN	CHKD	REMARKS
1	5/25/01	T.J.O.		AS-BUILT CONSTRUCTION
1	6/04/01	T.J.O.		REVISED AS-BUILT CONSTRUCTION (WMTP MODIFICATIONS)

Tetra Tech EM Inc.

DESIGNED BY: M.S.Z.
DRAWN BY: R.T.F.
CHECKED BY: M.S.Z.
RE-CHECKED BY: T.J.O.
APPROVED BY: T.J.O.
DATE: 9/28/98

ELECTRONIC COPY OF ORIGINAL DOCUMENT. NOT TO BE USED FOR CONSTRUCTION, BIDDING, RECORDATION, CONVEYANCE, SALES, OR AS THE BASIS FOR THE ISSUANCE OF A PERMIT.

TIMOTHY J. OLIVER
LA. P.E. # 28068
6/04/01
TETRA TECH EM INC.

MADISONVILLE CREOSOTE WORKS
MADISONVILLE, ST. TAMMANY, LOUISIANA

ELECTRICAL
Schematics and Details

EPA

WORK ASSIGNMENT NO.:
026-RA-RA-06AJ

DRAWING NO.:
E–5B

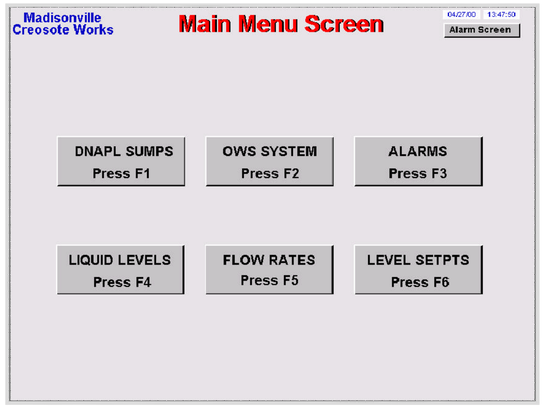

MAIN SCREEN

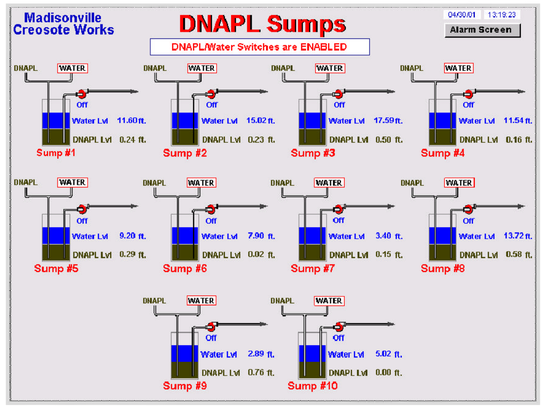

SCREEN F1

Notes:
1.) Level Controlling Media (DNAPL, WATER) indicated by illumination.
2.) Pump running when illuminated in green.

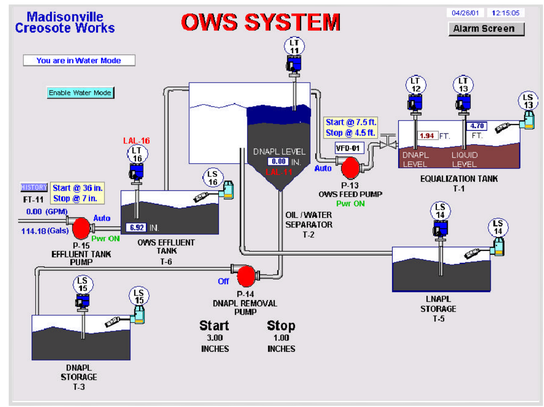

SCREEN F2

Notes:
1.) Level Transmitters illuminated in red on high liquid level.
2.) VFD illuminated on loss of signal from VFD.
3.) Pump running when illuminated in green.

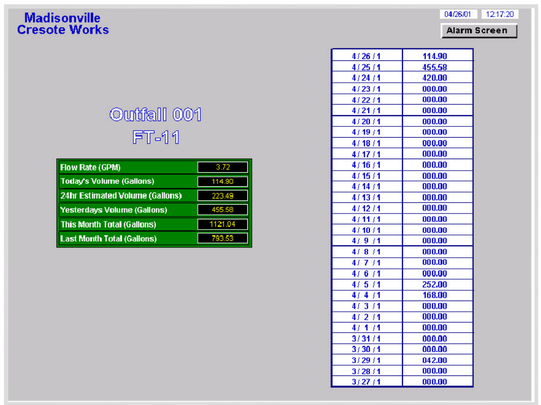

OUTFALL 001 SCREEN

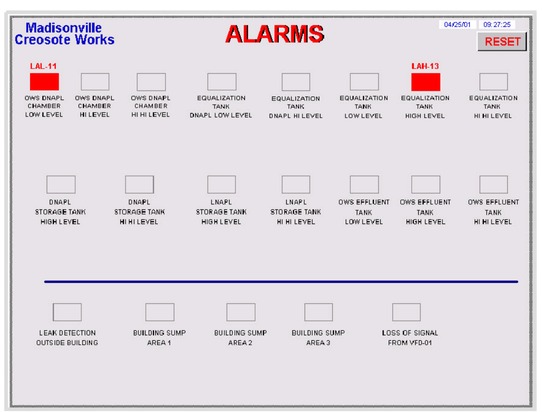

SCREEN F3

Note:
Squares illuminate in red when alarm condition occurs.

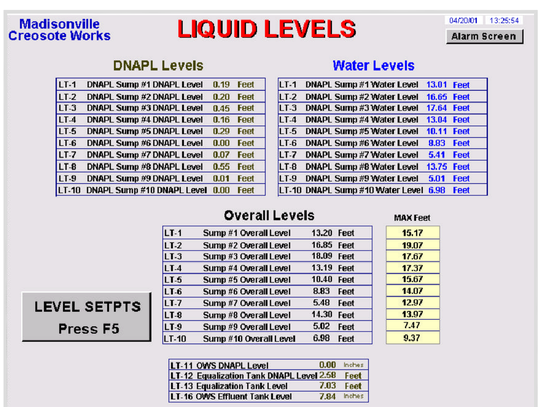

SCREEN F4

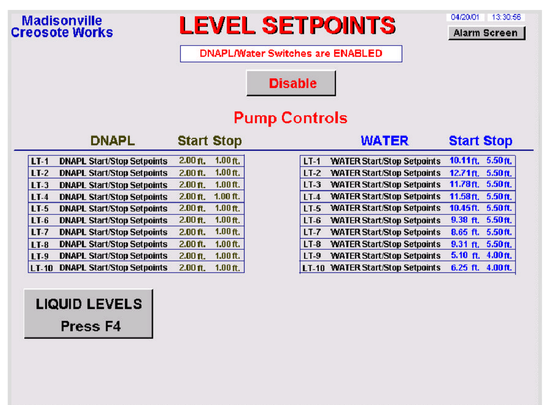

SCREEN F5

REVISIONS						
REV.	DATE	DRWN	CHK'D	REMARKS		
1	5/25/00	T.E.P.	T.J.O.	AS-BUILT CONSTRUCTION		
2	6/04/01	T.E.P.	M.D.W.	REVISED AS-BUILT CONSTRUCTION (WWTP MODIFICATIONS)		

Tetra Tech EM Inc.

DESIGNED BY: M.S.Z. RECHECKED BY: T.J.O.
DRAWN BY: R.T.F. APPROVED BY: T.J.O.
CHECKED BY: M.S.Z. DATE: 9/28/98

ELECTRONIC COPY OF ORIGINAL DOCUMENT. NOT TO BE USED FOR CONSTRUCTION, BIDDING, RECORDATION, CONVEYANCE, SALES, OR AS THE BASIS FOR THE ISSUANCE OF A PERMIT.
TIMOTHY J. OLIVER
LA. P.E. # 28068
6/04/01
TETRA TECH EM INC.

MADISONVILLE CREOSOTE WORKS
MADISONVILLE, ST. TAMMANY, LOUISIANA

PROGRAMMABLE LOGIC CONTROLLER
SCREEN LAYOUT

EPA

WORK ASSIGNMENT NO.:
026-RA-RA-06AJ

DRAWING NO.:
E-6

LIGHTNING SYSTEM LAYOUT

SCALE: 1" = 2'

NOTES:

1.) GROUNDING CONDUCTORS SUPPORTED AT 3'-0" SPACING MAXIMUM.

2.) DOWN CONDUCTORS PROTECTED FROM PHYSICAL DAMAGE.

3.) #8 AWG USED IN PLACE OF #17 AWG FOR ADDED MECHANICAL PROTECTION.

4.) AIR TERMINALS SECURELY FASTENED PER MANUFACTURER INSTRUCTIONS.

5.) DOWN CONDUCTOR CONNECTION TO GROUND ROD A MINIMUM OF 24" BELOW FINISHED GRADE.

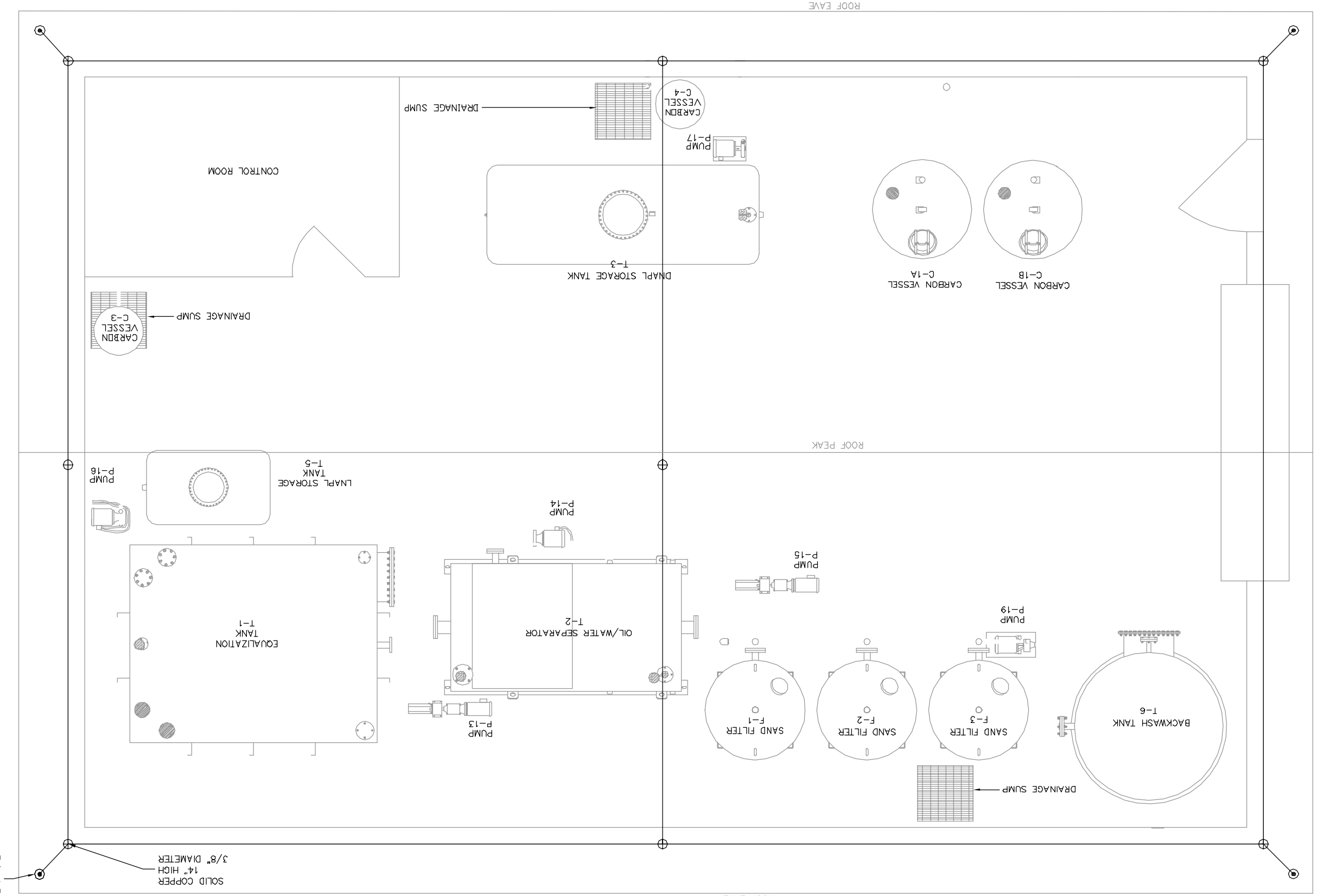

MADISONVILLE CREOSOTE WORKS
MADISONVILLE, ST. TAMMANY, LOUISIANA

WASTEWATER TREATMENT PLANT
PLAN VIEW
Lightning System Layout

EPA

WORK ASSIGNMENT NO.: 026-RA-RA-06AJ

DRAWING NO.: E-7

Tetra Tech EM Inc.

DESIGNED BY: M.F.
DRAWN BY: J.F.S.
CHECKED BY: T.J.O.

RE-CHECKED BY: T.J.O.
APPROVED BY: T.J.O.
DATE: 1/07/00

TIMOTHY J. OLIVER
LA P.E. # 28068
5/25/00
TETRA TECH EM INC.

ELECTRONIC COPY OF ORIGINAL DOCUMENT. NOT TO BE USED FOR CONSTRUCTION, BIDDING, RECORDATION, CONVEYANCE, SALES, OR AS THE BASIS FOR THE ISSUANCE OF A PERMIT.

REVISIONS

REV.	DATE	DRWN	CHKD	REMARKS
1	5/25/00	T.E.P.	T.J.O.	AS-BUILT CONSTRUCTION

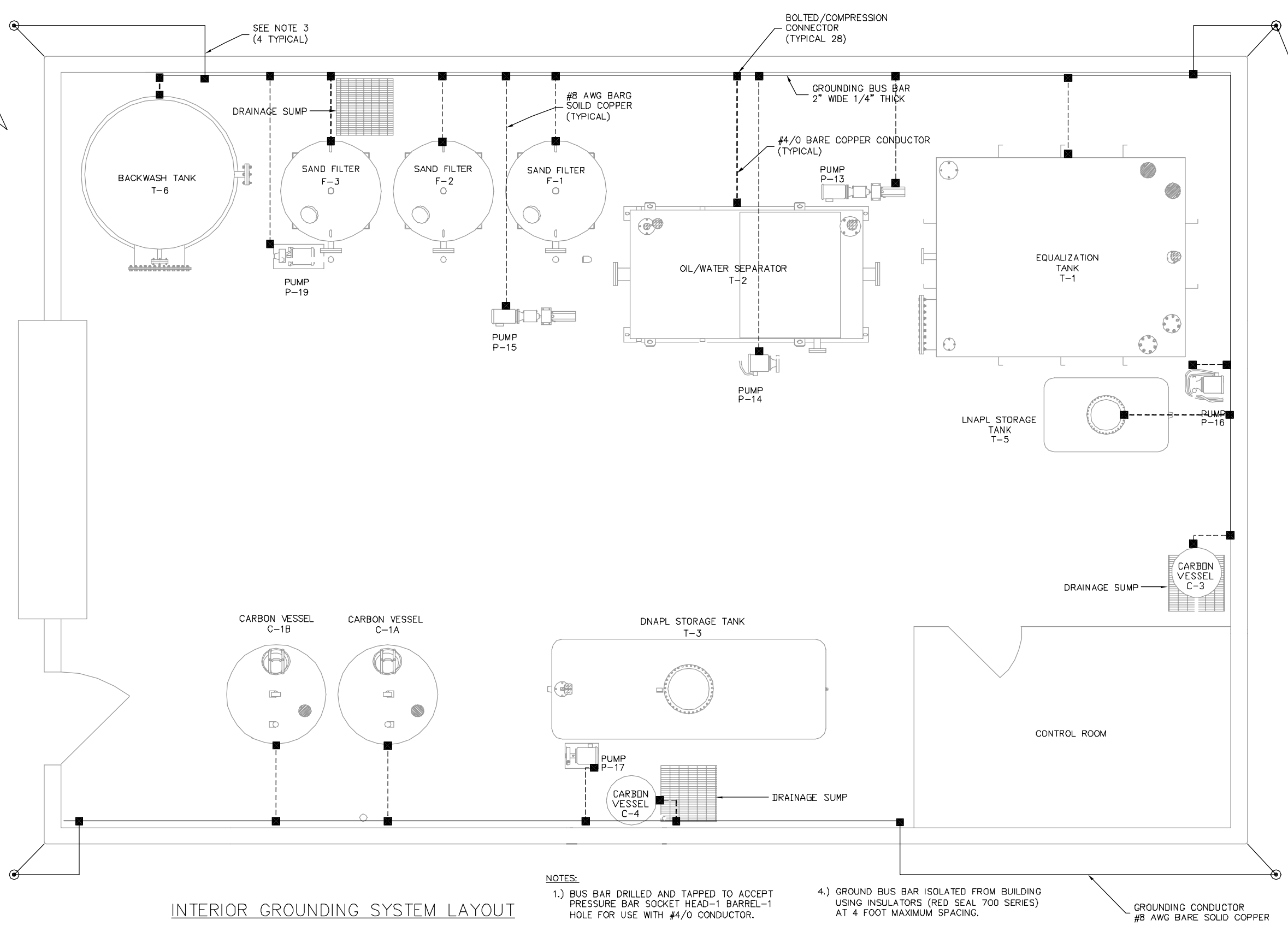

INTERIOR GROUNDING SYSTEM LAYOUT

SCALE: 1" = 2'

NOTES:

1.) BUS BAR DRILLED AND TAPPED TO ACCEPT PRESSURE BAR SOCKET HEAD-1 BARREL-1 HOLE FOR USE WITH #4/0 CONDUCTOR.

2.) GROUNDING CONNECTIONS TO VENDOR EQUIPMENT PER VENDOR RECOMMENDATIONS.

3.) EQUIPMENT GROUNDING SYSTEM CONNECTED TO BUILDING GROUNDING SYSTEM WITH EXOTHERMIC WELD.

4.) GROUND BUS BAR ISOLATED FROM BUILDING USING INSULATORS (RED SEAL 700 SERIES) AT 4 FOOT MAXIMUM SPACING.

REVISIONS

REV.	DATE	DRWN	CHKD	REMARKS
1	5/25/00	T.E.P.	T.J.O.	AS-BUILT CONSTRUCTION

Tetra Tech EM Inc.

DESIGNED BY: M.F.
DRAWN BY: J.F.S.
CHECKED BY: T.J.O.
RE-CHECKED BY: T.J.O.
APPROVED BY: T.J.O.
DATE: 1/07/00

ELECTRONIC COPY OF ORIGINAL DOCUMENT. NOT TO BE USED FOR CONSTRUCTION, BIDDING, RECORDATION, CONVEYANCE, SALES, OR AS THE BASIS FOR THE ISSUANCE OF A PERMIT.

TIMOTHY J. OLIVER
LA. P.E. # 28068
5/25/00
TETRA TECH EM INC.

MADISONVILLE CREOSOTE WORKS
MADISONVILLE, ST. TAMMANY, LOUISIANA

WASTEWATER TREATMENT PLANT
PLAN VIEW
Interior Grounding System Layout

EPA

WORK ASSIGNMENT NO.:
026-RA-RA-06AJ

DRAWING NO.:
E1-8

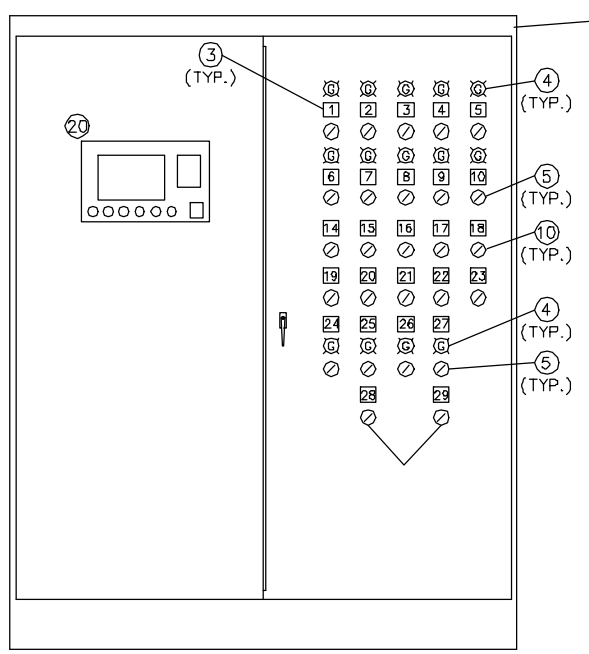

CENTRAL CONTROL PANEL
FRONT VIEW
NOT TO SCALE

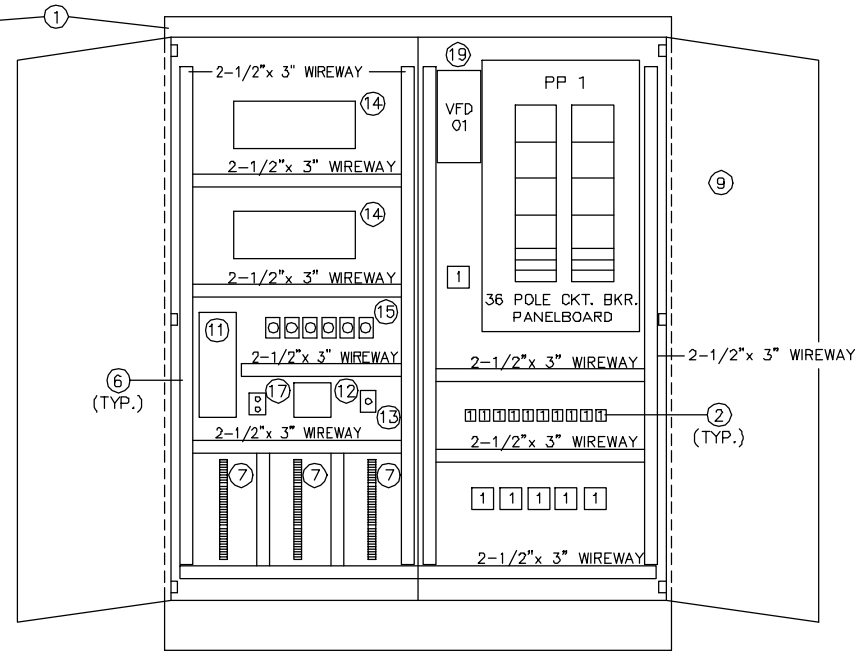

CENTRAL CONTROL PANEL
INTERIOR VIEW
NOT TO SCALE

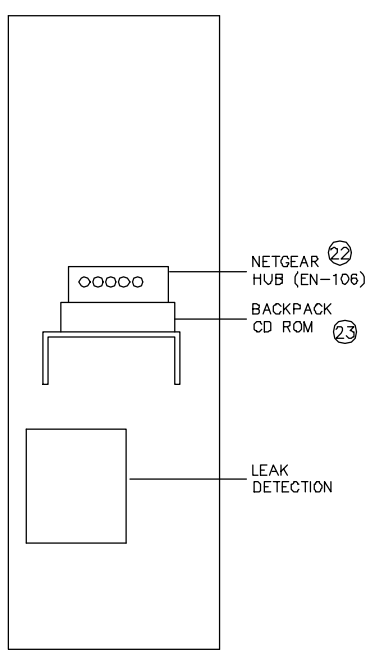

CENTRAL CONTROL PANEL
LEFT INSIDE VIEW
NOT TO SCALE

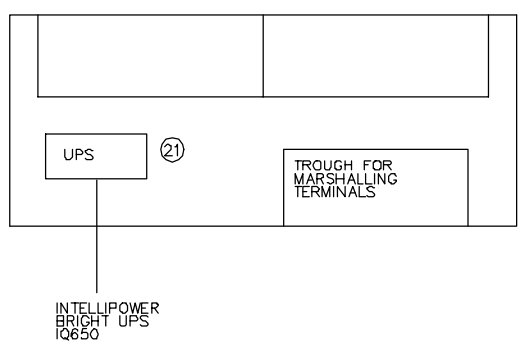

CENTRAL CONTROL PANEL
TOP INSIDE VIEW
NOT TO SCALE

EQUIPMENT LIST	
ITEM	DESCRIPTION
①	NEMA 12, TWO DOOR ENCLOSURE, SIZE 90"x 72"x 24" WITH INNER PANEL, HINGED GASKET DOORS, FINISH ANSI GRAY POLYESTER OVER PHOSPHATIZED SURFACES, MFG: HOFFMAN CATALOG NO. A-907236FSD.
②	MAGNETIC MOTOR STARTER FVNR, 3 POLE NEMA SIZE 1 WITH (1) N.O. AND (1) N.C. AUXILIARY CONTACTS ABB-A26-30-10
③	PLASTIC WHITE OVER BLACK 2 1/2" LONG x 1-1/2" HIGH WITH 3/16" HIGH LETTERS ENGRAVED PER NAMEPLATE SCHEDULE
④	PUSH-TO-TEST TRANSFORMED 6 VOLT GREEN PILOT LIGHT PRIMARY 120V LAMP IDEC TWD0126 IDEC ASD21ON
⑤	SELECTOR SWITCH HEAVY DUTY 3 POSITION (H-O-A) MAINTAINED CONTACTS WITH KNOB OPERATOR
⑥	PLASTIC WIREWAY 2-1/2"x 3" WITH SNAP-ON COVER
⑦	TERMINAL BLOCKS 600 V RATED WITH COLLAR TYPE TERMINALS, AND MOUNTING RAIL.
⑧	ELECTRIC HEATER, 200 WATT, 120 VAC, WITH ADJUSTABLE THERMOSTAT, HOFFMAN CATALOG NO. D-AHZ001A.
⑨	CUTLER HAMMER, TYPE PRL2A 120/208 VOLT, 3 PHASE, 4 WIRE WITH 100 AMP MAIN LUGS AND CIRCUIT BREAKERS AS SCHEDULED
⑩	SELECTOR SWITCH, HEAVY DUTY 2 POSITION (DNAPL, WATER) MAINTAINED CONTACTS WITH KNOB OPERATOR
⑪	120 VOLT AC TO 24 VOLT DC CONVERTER DTS-120A/24-3
⑫	AUTO DIALER WITH BATTERY BACKUP SYSTEM. PHONETIC MODEL SENSAPHONE 1108
⑬	TELEPHONE JACK
⑭	PROGRAMMABLE LOGIC CONTROLLER
⑮	LEVEL PROBE RELAYS IDEC RP2P-U
⑯	POWER STRIP, 120V 6 RECEPTACLES
⑰	OUTLET, 120V 2 RECEPTACLES
⑱	SPEED POT CONTROLLER FOR MANUAL VFD OPERATION
⑲	VARIABLE FREQ. DRIVE GE FUSI AF-300 G11
⑳	OPERATOR INTERFACE GE FANUC DISPLAY STATION 2000 IC752WBB202D
㉑	INTELLIPOWER BRIGHT UPS IQ650
㉒	NETGEAR HUB EN106
㉓	BACK PACK CD ROM

NAMEPLATE ENGRAVING SCHEDULE		
DESCRIPTION		
NAMEPLATE	FIRST LINE	SECOND LINE
1	P-1	
2	P-2	
3	P-3	
4	P-4	
5	P-5	
6	P-6	
7	P-7	
8	P-8	
9	P-9	
10	P-10	
11	NOT USED	
12	NOT USED	
13	NOT USED	
14	P-1	DNAPL WATER
15	P-2	DNAPL WATER
16	P-3	DNAPL WATER
17	P-4	DNAPL WATER
18	P-5	DNAPL WATER
19	P-6	DNAPL WATER
20	P-7	DNAPL WATER
21	P-8	DNAPL WATER
22	P-9	DNAPL WATER
23	P-10	DNAPL WATER
24	P-12	
25	VFD01	
26	P-14	
27	VFD02	
28	P-13 RUN	
29	P-15 RUN	

REVISIONS

REV.	DATE	DRWN	CHKD	REMARKS

Tetra Tech EM Inc.

DESIGNED BY: C.P.E.
DRAWN BY: M.C.B.
CHECKED BY: C.P.E.
RE-CHECKED BY: T.J.O.
APPROVED BY: T.J.O.
DATE: 6/04/01

ELECTRONIC COPY OF ORIGINAL DOCUMENT. NOT TO BE USED FOR CONSTRUCTION, BIDDING, RECORDATION, CONVEYANCE, SALES, OR AS THE BASIS FOR THE ISSUANCE OF A PERMIT.

TIMOTHY J. OLIVER
LA. P.E. # 28068
6/04/01
TETRA TECH EM INC.

MADISONVILLE CREOSOTE WORKS
MADISONVILLE, ST. TAMMANY, LOUISIANA

DETAILS,
ELECTRICAL PANEL
LAYOUT

EPA

WORK ASSIGNMENT NO.:
020-RD-RD-06AJ

DRAWING NO.:
E-9

FIELD PROCESS AREA	MARSHALLING TERMINAL	PLC CABINET

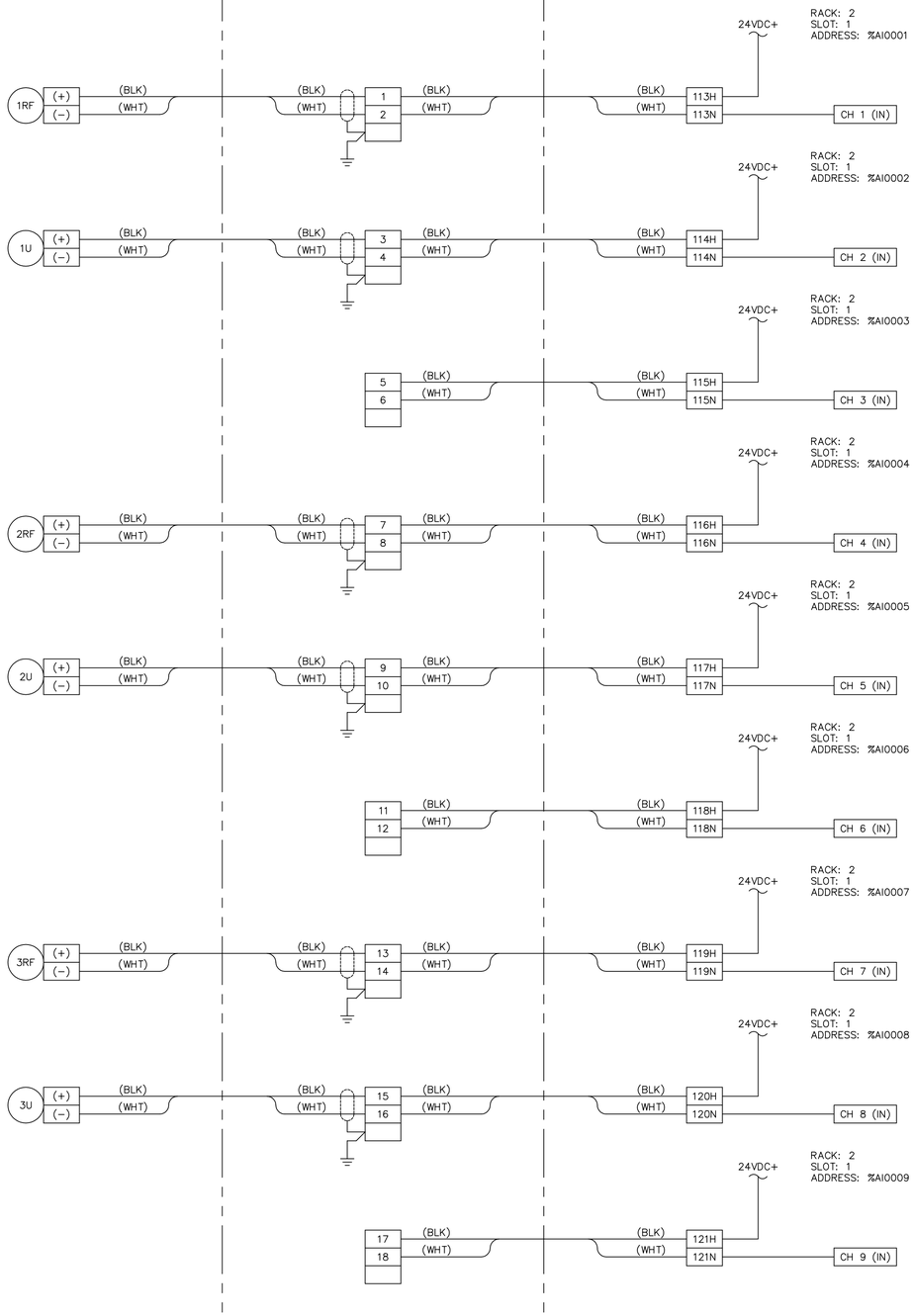

FIELD PROCESS AREA	MARSHALLING TERMINAL	PLC CABINET

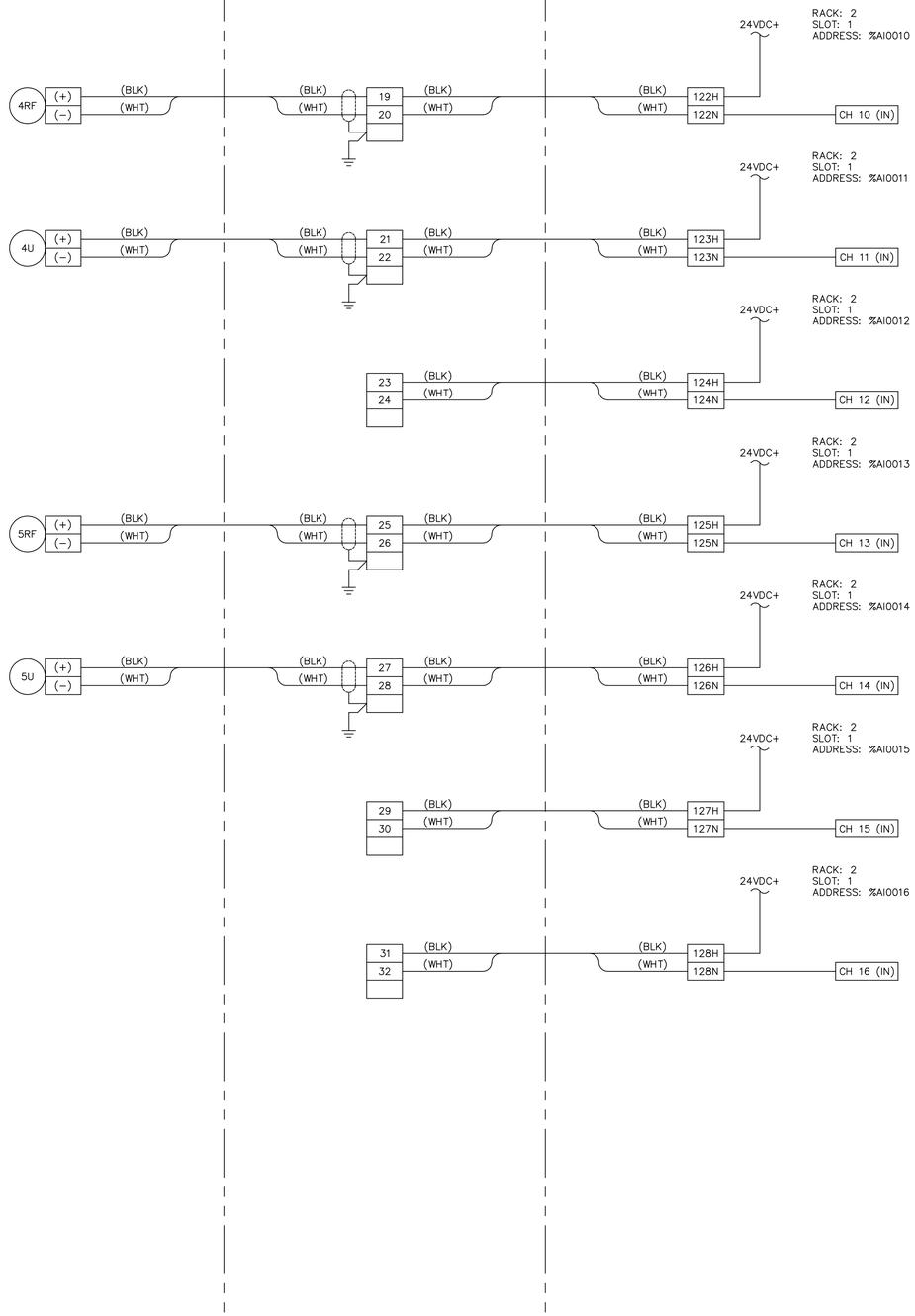

REVISIONS

REV.	DATE	DRWN	CHKD	REMARKS

Tetra Tech EM Inc.

DESIGNED BY: C.P.E.
DRAWN BY: M.G.B.
CHECKED BY: C.P.E.

RE-CHECKED BY: ----
APPROVED BY: ----
DATE: 6/04/01

ELECTRONIC COPY OF ORIGINAL DOCUMENT. NOT TO BE USED FOR CONSTRUCTION, BIDDING, RECORDATION, CONVEYANCE, SALES, OR AS THE BASIS FOR THE ISSUANCE OF A PERMIT.
TIMOTHY J. OLIVER
LA. P.E. # 28068
6/04/01
TETRA TECH EM INC.

MADISONVILLE CREOSOTE WORKS
MADISONVILLE, ST. TAMMANY, LOUISIANA

DETAILS, PLC RACK #2 SLOT #1 LOOP DIAGRAMS

EPA

WORK ASSIGNMENT NO.:
020-RD-RD-06AJ

DRAWING NO.:
E-10A

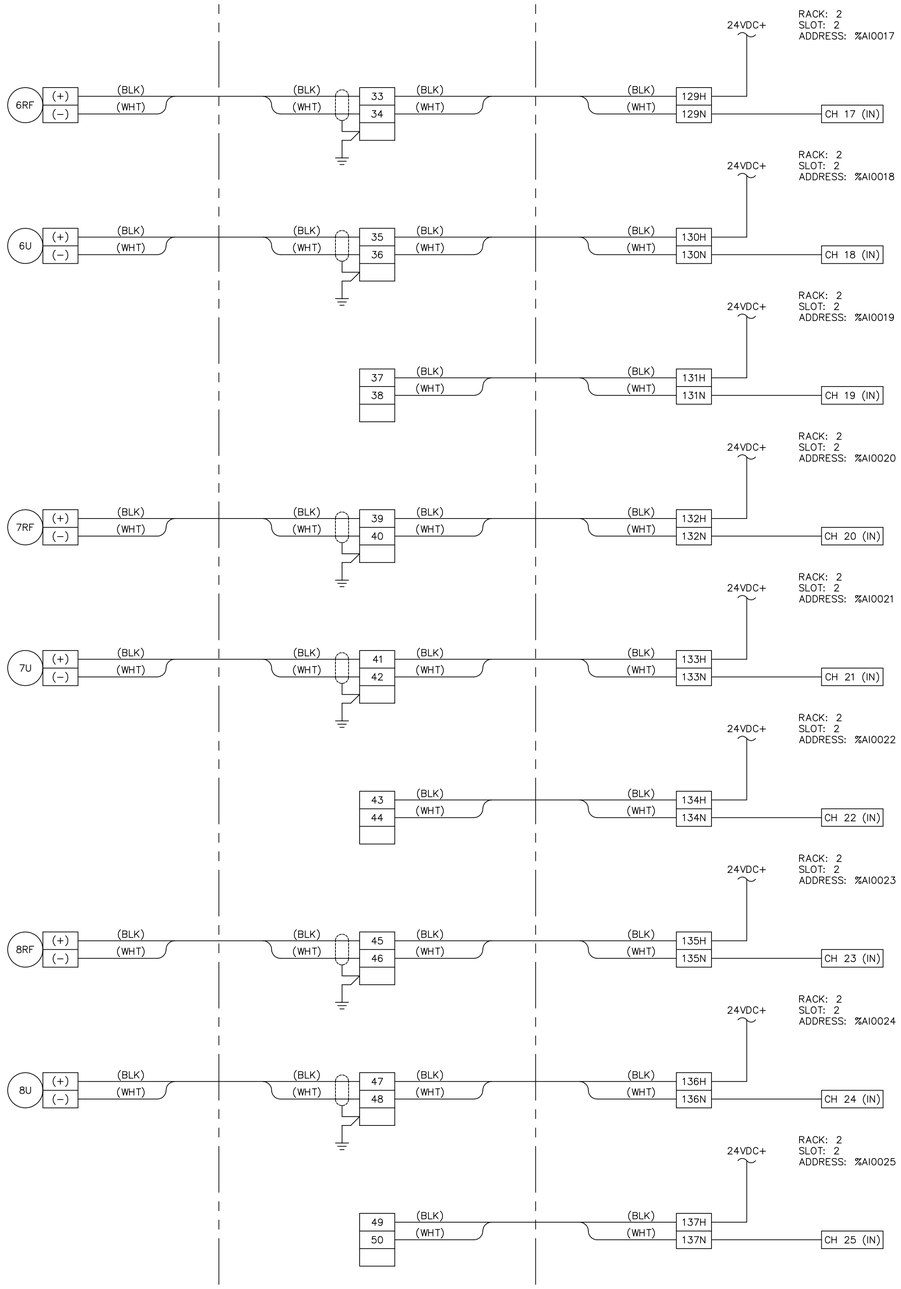

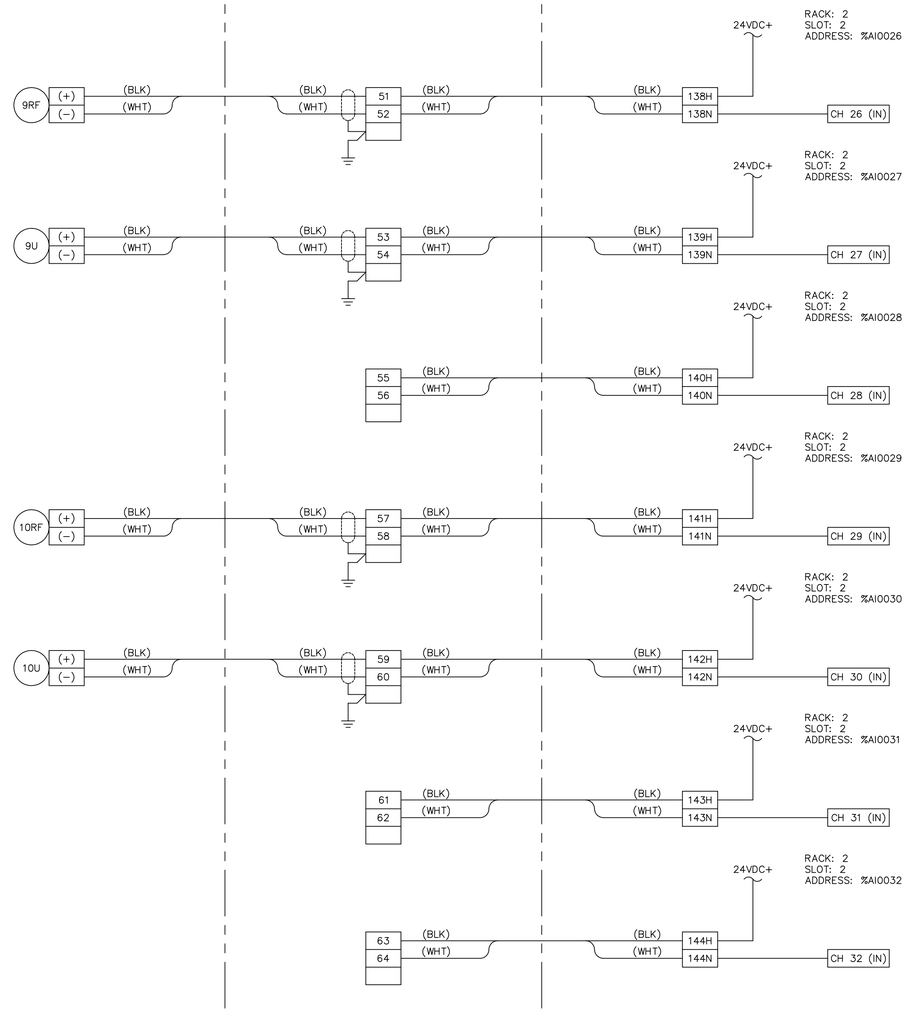

REVISIONS

REV.	DATE	DRWN	CHKD	REMARKS

Tetra Tech EM Inc.

DESIGNED BY: C.P.E.
DRAWN BY: M.G.B.
CHECKED BY: C.P.E.
RE-CHECKED BY: ----
APPROVED BY: ----
DATE: 6/04/01

ELECTRONIC COPY OF ORIGINAL DOCUMENT. NOT TO BE USED FOR CONSTRUCTION, BIDDING, RECORDATION, CONVEYANCE, SALES, OR AS THE BASIS FOR THE ISSUANCE OF A PERMIT. THIS COPY WAS PLOTTED ON 6/04/01 LA. P.E. # 28068 TETRA TECH EM INC.

MADISONVILLE CREOSOTE WORKS
MADISONVILLE, ST. TAMMANY, LOUISIANA

DETAILS, PLC RACK #2 SLOT #2 LOOP DIAGRAMS

EPA

WORK ASSIGNMENT NO.: 020-RD-RD-06AJ

DRAWING NO.: E-10B

FIELD PROCESS AREA	MARSHALLING TERMINAL	PLC CABINET	FIELD PROCESS AREA	MARSHALLING TERMINAL	PLC CABINET

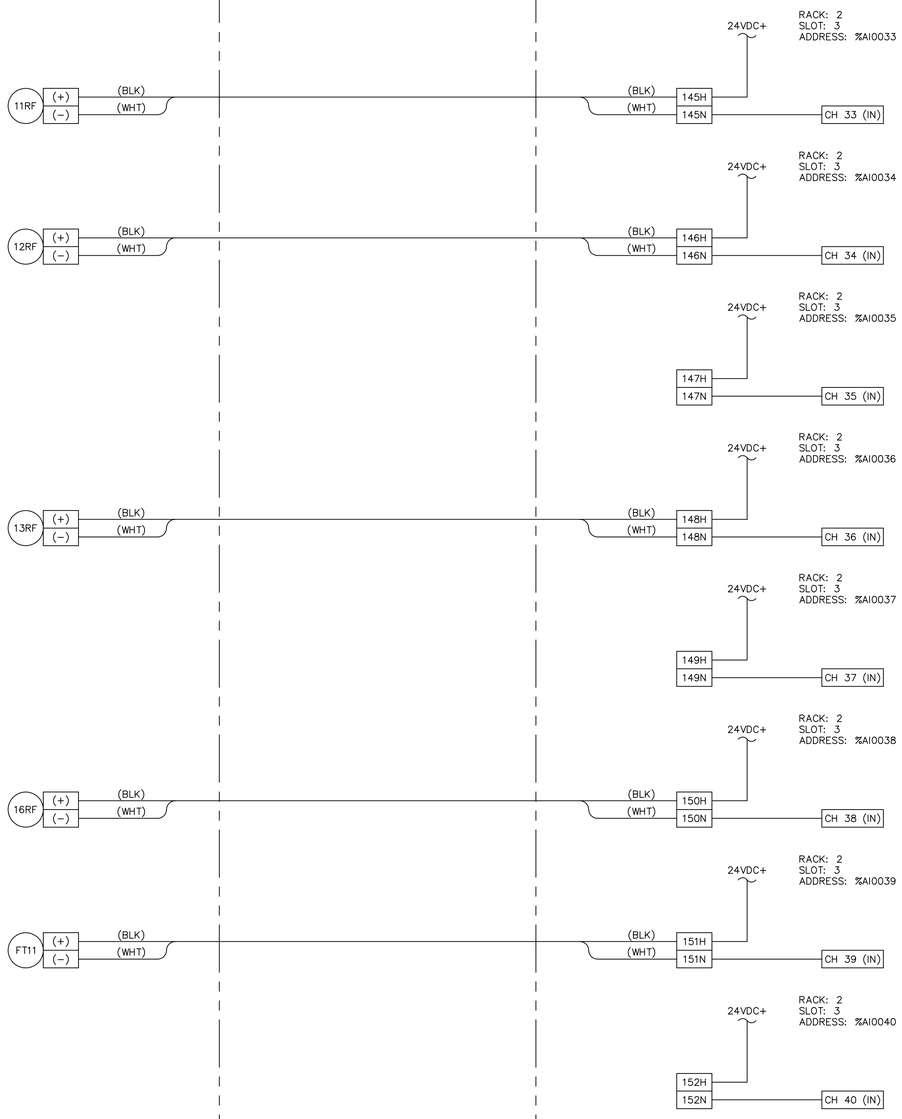

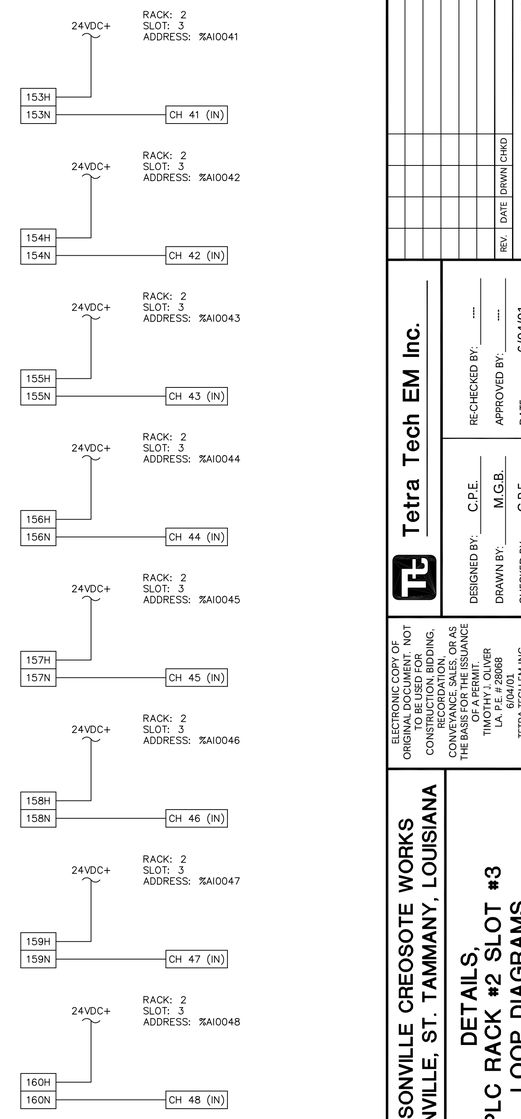

REVISIONS

REV.	DATE	DRWN	CHKD	REMARKS

Tetra Tech EM Inc.

DESIGNED BY: C.P.E.
DRAWN BY: M.G.B.
CHECKED BY: C.P.E.
RE-CHECKED BY: ---
APPROVED BY: ---
DATE: 6/04/01

ELECTRONIC COPY OF ORIGINAL DOCUMENT: NOT TO BE USED FOR CONSTRUCTION, BIDDING, RECORDATION, CONVEYANCE, SALES, OR AS THE BASIS FOR THE ISSUANCE OF A PERMIT.
TIMOTHY J. OLIVER
LA. P.E. # 28068
6/04/01
TETRA TECH EM INC.

MADISONVILLE CREOSOTE WORKS
MADISONVILLE, ST. TAMMANY, LOUISIANA

DETAILS, PLC RACK #2 SLOT #3 LOOP DIAGRAMS

EPA

WORK ASSIGNMENT NO.: 020-RD-RD-06AJ

DRAWING NO.: E-10C