Table of Contents

Title 33
ENVIRONMENTAL QUALITY

Part XV. Radiation Protection

Chapter 1. General Provisions 1
§101. Scope 1
§102. Definitions and Abbreviations 1
§103. Exemptions 11
§104. Records 11
§105. Inspections 12
§106. Tests 12
§107. Additional Requirements 12
§108. Violations 12
§109. Impounding 12
§110. Prohibited Uses 12
§111. Interpretations 13
§112. Rulemaking 13
§113. Appeal Procedure, Administrative Review 13
§114. Severability 13
§115. Communications 13
§116. Public Participation in Licensing Actions 14
§199. Appendix A 14
Chapter 2. Registration of Radiation Machines and Facilities 14
§201. Purpose and Scope 14
§202. Definition 15
§203. Exemptions 15
§204. Application for Registration of Radiation Machines and Facilities 15
§205. Application for Registration of Servicing and Services 15
§206. Issuance of Registration Certificate 16
§207. Expiration of Registration Certificate 16
§208. Renewal of Registration Certificate 16
§209. Report of Changes 16
§210. Approval Not Implied 16
§211. Assembler and/or Transferor Obligation 16
§212. Reciprocal Recognition of Out-of-State Radiation Machines 17
§213. Modification, Revocation, and Termination of Registration Certificate 17
Chapter 3. Licensing of Radioactive Material 17
§301. Purpose and Scope 17
§302. Deliberate Misconduct 18
Subchapter A. Exemptions 18
§303. Source Material 18

§304. Radioactive Material Other Than Source Material 19
Subchapter B. Licenses 22
§320. Types of Licenses 22
Subchapter C. General Licenses 22
§321. General Licenses: Source Material 22
§322. General Licenses: Radioactive Material Other Than Source Material 23
Subchapter D. Specific Licenses 27
§324. Filing Application for Specific Licenses 27
§325. General Requirements for the Issuance of Specific Licenses 29
§326. Special Requirements for Issuance of Certain Specific Licenses for Radioactive Material 32
§327. Special Requirements for Specific Licenses of Broad Scope 34
§328. Special Requirements for Specific License to Manufacture, Assemble, Repair, or Distribute Commodities, Products, or Devices that Contain Radioactive Material 35
§330. Issuance of Specific Licenses 44
§331. Specific Terms and Conditions of Licenses 45
§332. Expiration and Termination of Licenses and Decommissioning of Sites and Separate Buildings or Outdoor Areas 45
§333. Renewal of Licenses 48
§334. Amendment of Licenses at Request of Licensee 48
§335. Department Action on Applications to Renew or Amend 48
§340. Transfer of Material 48
§341. Reporting Requirements for General and Specific Licenses 49
§342. Records 50
§350. Modification and Revocation of Licenses 50
§351. Financial Assurance Arrangements 50
§361. Registration of Product Information 51
Subchapter E. Reciprocity 51
§390. Reciprocal Recognition of Licenses 51
Subchapter Z. Appendices 52
§399. Schedules A and B, and Appendices A, B, C, D, E, and F 52
Chapter 4. Standards for Protection against Radiation 61
Subchapter A. General Provisions 61
§401. Purpose 61
§402. Scope 61
§403. Definitions 61
§404. Implementation 63
Subchapter B. Radiation Protection Programs 64
§406. Radiation Protection Programs 64
§410. Occupational Dose Limits for Adults 64
§411. Compliance with Requirements for Summation of External and Internal Doses 65
§412. Determination of External Dose from Airborne Radioactive Material 65

§413. Determination of Internal Exposure 65
§414. Determination of Prior Occupational Dose 66
§415. Planned Special Exposures 67
§416. Occupational Dose Limits for Minors 68
§417. Dose to an Embryo/Fetus 68
§421. Radiation Dose Limits for Individual Members of the Public 68
§422. Compliance with Dose Limits for Individual Members of the Public 69
§426. Testing for Leakage or Contamination of Sealed Sources 69
Subchapter C. Surveys and Monitoring 70
§430. General 70
§431. Conditions Requiring Individual Monitoring of External and Internal Occupational Dose 71
§432. Location of Individual Monitoring Devices 71
Subchapter D. Control of Exposure From External Sources in Restricted Areas 72
§436. Control of Access to High Radiation Areas 72
§437. Control of Access to Very High Radiation Areas 72
§438. Control of Access to Very High Radiation Areas -Irradiators 72
Subchapter E. Respiratory Protection and Controls to Restrict Internal Exposure in Restricted Areas 74
§440. Use of Process or Other Engineering Controls 74
§441. Use of Other Controls 74
§442. Use of Individual Respiratory Protection Equipment 74
§443. Application for Use of Higher Assigned Protection Factors 76
Subchapter F. Storage and Control of Licensed or Registered Sources of Radiation 76
§445. Security of Stored Sources of Radiation 76
Subchapter G. Precautionary Procedures 76
§450. Caution Signs 76
§451. Posting Requirements 77
§452. Exceptions to Posting Requirements 77
§453. Labeling Containers and Radiation Machines 77
§454. Exemptions to Labeling Requirements 78
§455. Procedures for Receiving and Opening Packages 78
Subchapter H. Waste Disposal 79
§460. General Requirements 79
§461. Method for Obtaining Approval of Proposed Disposal Procedures 79
§462. Disposal by Release into Sanitary Sewerage 79
§463. Treatment or Disposal by Incineration 80
§464. Disposal of Specific Wastes 80
§465. Transfer for Disposal and Manifests 80
§466. Compliance with Environmental and Health Protection Regulations 80
Subchapter I. Records 80
§470. General Provisions 80
§471. Records of Radiation Protection Programs 80

§472. Records of Surveys ... 81
§473. Records of Tests for Leakage or Contamination from Sealed Sources ... 81
§474. Records of Prior Occupational Dose ... 81
§475. Records of Planned Special Exposures ... 81
§476. Records of Individual Monitoring Results ... 82
§477. Records of Dose to Individual Members of the Public ... 82
§478. Records of Waste Disposal ... 82
§479. Records of Testing Entry Control Devices for Very High Radiation Areas ... 82
§480. Form of Records ... 83
Subchapter J. Reports ... 83
§485. Reports of Stolen, Lost, or Missing Licensed or Registered Sources of Radiation ... 83
§486. Notification of Incidents ... 83
§487. Reports of Exposures, Radiation Levels, and Concentrations of Radioactive Material Exceeding the Constraints or Limits ... 84
§488. Reports of Planned Special Exposures ... 85
§490. Reports of Individual Monitoring ... 85
§491. Notifications and Reports to Individuals ... 85
§492. Reports of Leaking or Contamination From Sealed Sources ... 86
Subchapter K. Additional Requirements ... 86
§496. Vacating Premises ... 86
Subchapter Z. Appendices ... 86
§499. Appendices A, B, C, D, E ... 86
Chapter 5. Radiation Safety Requirements for Industrial Radiographic Operations ... 140
§501. Purpose ... 140
§502. Scope ... 140
§503. Definitions ... 140
§504. Exemptions ... 141
§505. Form of Records ... 142
Subchapter A. Equipment Control ... 142
§540. Limits on Levels of Radiation for Radiographic Source Changers and Storage Containers ... 142
§541. Locking of Sources of Radiation ... 142
§542. Storage and Transportation Precautions ... 142
§543. Radiation Survey Instruments ... 143
§544. Leak Testing, Repair, Tagging, Opening, Modification, Replacement, and Records of Receipt and Transfer of Sealed Sources ... 143
§545. Quarterly Inventory ... 144
§546. Utilization Logs ... 144
§547. Inspection and Maintenance of Radiographic Exposure Devices and Storage Containers ... 144
§548. Permanent Radiographic Installations ... 145
§549. Vehicle Identification ... 145
§550. Performance Requirements for Radiography Equipment ... 145

Subchapter B. Personal Radiation Safety Requirements for Radiographers 146
§573. Conducting Industrial Radiographic Operations 146
§575. Training and Testing 147
§576. Operating and Emergency Procedures 148
§577. Personnel Monitoring Control 148
§578. Reciprocity 149
§579. Identification (I.D.) Cards for Radiographers or Radiographer Trainees 150
Subchapter C. Precautionary Procedures in Radiographic Operations 150
§585. Security 150
§586. Posting 150
§587. Radiation Surveys and Survey Records 150
§588. Documents and Records Required at Temporary Job Sites and Applicable Field Stations ... 151
§589. Special Requirements and Exemptions for Enclosed Radiography 151
§590. Specific Requirements for Radiographic Personnel Performing Industrial Radiography 152
§591. Prohibitions 152
§599. Appendices A and B 152
Chapter 6. X-Rays in the Healing Arts 153
§601. Scope 153
§602. Definitions 153
§603. General and Administrative Requirements 158
§604. General Requirements for All Diagnostic X-Ray Systems 161
§605. Fluoroscopic X-Ray Systems 162
§606. Radiographic Systems Other Than Fluoroscopic, Dental Intraoral, or Computed Tomography X-Ray Systems 165
§607. Intraoral Dental Radiographic Systems 169
§608. Therapeutic X-Ray Systems of Less Than 1 MeV 170
§609. X-Ray and Electron Therapy Systems with Energies of 1 MeV and Above 173
§610. Computed Tomography X-Ray Systems 179
§613. Notifications, Reports, and Records of Medical Events 182
§615. Report and Notification of a Dose to an Embryo/Fetus 182
§699. Appendices A, B, and C 182
Chapter 7. Use of Radionuclides in the Healing Arts 183
§701. Purpose and Scope 183
§702. License Required and Exemptions 183
§703. License Amendments and Provisions for Research Involving Human Subjects 184
§704. Notifications 184
§705. ALARA Program 185
§706. Radiation Safety Officer 185
§707. Radiation Safety Committee 186
§708. Statement of Authorities and Responsibilities 186
§709. Supervision 187

§710. Report and Notification of a Dose to an Embryo/Fetus or a Nursing Child 187
§711. Mobile Nuclear Medicine Service Administrative Requirements..... 188
§712. Notifications, Reports, and Records of Medical Events..... 188
§713. Suppliers 189
§714. Quality Control of Imaging Equipment..... 190
§715. Possession, Use, Calibration, and Checking of Dose Calibrators and of Instruments to Measure Dosages of Alpha-Emitting or Beta-Emitting Radionuclides..... 190
§716. Calibration and Checking of Survey Instruments 191
§717. Assay of Radiopharmaceutical Dosages 191
§718. Authorization for Calibration and Reference Sources..... 192
§719. Requirements for Possession of Sealed Sources and Brachytherapy Sources 192
§720. Syringe Shields..... 193
§721. Syringe Labels 193
§722. Vial Shields 193
§723. Vial and Vial Shield Labels..... 193
§724. Surveys for Contamination and Ambient Radiation Dose Rate..... 194
§725. Release of Individuals Containing Radiopharmaceuticals or Permanent Implants..... 194
§726. Mobile Medical Service Technical Requirements 194
§727. Storage of Volatiles and Gases..... 195
§728. Decay-in-Storage 195
§729. Use of Radiopharmaceuticals for Uptake, Dilution, or Excretion Studies..... 195
§730. Possession of Survey Instrument..... 196
§731. Use of Radiopharmaceuticals, Generators, and Reagent Kits for Imaging and Localization Studies..... 196
§732. Permissible Molybdenum-99 Concentration..... 197
§733. Control of Aerosols and Gases 197
§734. Possession of Survey Instruments 197
§735. Use of Radiopharmaceuticals for Therapy 198
§736. Safety Instruction..... 198
§737. Safety Precautions 198
§738. Possession of Survey Instruments 199
§739. Use of Sealed Sources for Diagnosis..... 199
§740. Availability of Survey Instrument 199
§741. Use of Sources for Brachytherapy..... 199
§742. Safety Instructions 200
§743. Safety Precautions 200
§744. Brachytherapy Records 201
§745. Surveys for Temporary Implants..... 201
§746. Possession of Survey Instruments 202
§747. Use of Sealed Sources in Teletherapy Units, Remote Afterloader Units, and Gamma Stereotactic Radiosurgery Units 202
§748. Maintenance and Repair Restrictions..... 202

§749. Amendments 202
§750. Safety Procedures and Instructions for Remote Afterloader Units, Teletherapy Units, and Gamma Stereotactic Radiosurgery Units 202
§751. Safety Precautions for Remote Afterloader Units, Teletherapy Units, and Gamma Stereotactic Radiosurgery Units 203
§752. Possession of Survey Instrument 204
§753. Radiation Monitoring Device 204
§754. Viewing System 204
§755. Dosimetry Equipment and Therapy-Related Computer Systems 204
§756. Full Calibration Measurements on Teletherapy Units, Remote Afterloader Units, and Gamma Stereotactic Radiosurgery Units 205
§757. Periodic Spot-Checks 207
§758. Radiation Surveys 210
§759. Safety Spot-Checks for Teletherapy Facilities 210
§760. Modification of Teletherapy Unit or Room before Beginning a Treatment Program 211
§761. Reports of Teletherapy Surveys, Checks, Tests, and Measurements 211
§762. Five-Year Inspection 211
§763. Training 211
§776. Medical Advisory Committee 216
§777. Written Directives 216
Chapter 8. Radiation Safety Requirements for Analytical X-Ray Equipment 217
§801. Purpose and Scope 217
§802. Definitions 217
§803. Equipment Requirements 217
§804. Area Requirements 218
§805. Operating Requirements 219
§806. Personnel Requirements 219
Chapter 9. Radiation Safety Requirements for Particle Accelerators 219
§901. Purpose and Scope 219
Subchapter A. Registration and Licensing Procedures 219
§902. Registration and License Requirements 219
§903. General Requirements for the Issuance of a Registration or License for Particle Accelerators 220
§904. Human Use of Particle Accelerators 220
Subchapter B. Radiation Safety Requirements for the Use of Particle Accelerators 220
§906. Limitations 220
§907. Shielding and Safety Design Requirements 220
§908. Particle Accelerator Controls and Interlock Systems 221
§909. Warning Devices 221
§910. Operating Procedures 221
§911. Radiation Monitoring Requirements 221
§912. Ventilation Systems 222

§915. Notifications, Reports, and Records of Medical Events 222
§917. Report and Notification of a Dose to an Embryo/Fetus 222
Chapter 10. Notices, Instructions, and Reports to Workers; Inspections 222
§1001. Purpose and Scope 222
§1011. Posting of Notices to Workers 223
§1012. Instructions to Workers 223
§1013. Notifications and Reports to Individuals 223
§1014. Presence of Representatives of Licensees or Registrants and of Workers During Inspection 224
§1015. Consultation with Workers during Inspections 225
§1016. Requests by Workers for Inspections 225
§1017. Inspections Not Warranted: Informal Review 225
Chapter 11. Radiation Safety Requirements for Radioactive Mineral Tailings and Industrial Byproduct Piles 226
§1101. Scope 226
§1102. Specific Requirements for Tailings, Piles and Ponds 226
§1103. Sale or Transfer of the Site 226
§1104. Abandonment of the Site 226
§1105. Waiver 226
Chapter 13. Licensing Requirements for Land Disposal of Radioactive Waste 227
Subchapter A. General Provisions 227
§1301. Purpose and Scope 227
§1302. Definitions 227
§1303. License Required 228
§1305. Content of Application 228
§1306. General Information 228
§1307. Specific Technical Information 229
§1308. Technical Analyses 230
§1309. Institutional Information 230
§1310. Financial Information 230
§1311. Requirements for Issuance of a License 230
§1312. Conditions of Licenses 231
§1313. Application for Renewal or Closure 231
§1314. Contents of Application for Site Closure and Stabilization 232
§1315. Postclosure Observation and Maintenance 232
§1316. Transfer of License 232
§1317. Termination of License 232
Subchapter B. Performance Objectives 233
§1318. General Requirement 233
§1319. Protection of the General Population from Releases of Radioactivity 233
§1320. Protection of Individuals from Inadvertent Intrusion 233

§1321. Protection of Individuals during Operations 233
§1322. Stability of the Disposal Site after Closure 233
Subchapter C. Technical Requirements for Land Disposal Facilities 233
§1323. Disposal Site Suitability Requirements for Land Disposal 233
§1324. Disposal Site Design for Land Disposal 234
§1325. Land Disposal Facility Operation and Disposal Site Closure 234
§1326. Environmental Monitoring 235
§1327. Alternative Requirements for Design and Operations 235
§1328. Institutional Requirements 235
§1329. Requirements for Waste Classification and Characteristics 235
Subchapter D. Financial Assurances 235
§1330. Applicant Qualifications and Assurances 235
§1331. Funding for Disposal Site Closure and Stabilization 236
§1332. Financial Assurances for Institutional Controls 236
Subchapter E. Records, Reports, Tests, and Inspections 237
§1333. Maintenance of Records, Reports, and Transfers 237
§1334. Tests on Land Disposal Facilities 238
§1335. Department Inspections of Land Disposal Facilities 238
Chapter 14. Regulation and Licensing of Naturally Occurring Radioactive Material (NORM) 238
§1401. Purpose 238
§1402. Scope 238
§1403. Definitions 239
§1404. Exemptions 239
§1406. Radiation Survey Instruments 240
§1407. Surveys 241
§1408. General License 241
§1410. General Licenses: Pipe Yards, Storage Yards, or Production Equipment Yards 242
§1411. Protection of Workers during Operations 242
§1412. Treatment, Transfer, and Disposal 242
§1414. Containers 243
§1415. Waste Piles 243
§1416. Inspections of Storage Tanks Containing NORM Waste 243
§1417. Release for Unrestricted Use 243
§1418. NORM Manifests 244
§1419. Financial Responsibility of Transporters 245
§1420. Financial Security Requirements for NORM Treaters or Storers 246
§1499. Appendices A, B, and C 246
Chapter 15. Transportation of Radioactive Material 248
§1501. Purpose 248
§1502. Scope 248
§1503. Definitions 248

§1504. Requirement for License 250
§1505. Exemptions 250
§1506. Transportation of Licensed Material 251
§1507. General Licenses for Carriers 251
§1508. General License: NRC Approved Packages 251
§1509. Previously Approved Type B Packages 252
§1510. General License: DOT Specification Container 252
§1511. General License: Use of Foreign Approved Package 252
§1512. Routine Determinations 253
§1513. Air Transport of Plutonium 253
§1514. Records 253
§1515. Reports 254
§1516. Advance Notification of Transport of Nuclear Waste 254
§1517. Incorporation by Reference 255
Chapter 17. Licensing and Radiation Safety Requirements for Irradiators 255
§1701. Purpose and Scope 255
§1703. Definitions 255
§1705. License Required 256
§1707. Start of Construction 256
§1709. Applications for Exemptions 256
§1711. Request for Written Statements 257
§1713. Performance Criteria for Sealed Sources 257
§1715. Access Control 257
§1717. Shielding 258
§1719. Fire Protection 258
§1721. Radiation Monitors 258
§1723. Control of Source Movement 258
§1725. Irradiator Pools 259
§1727. Source Rack Protection 259
§1729. Power Failures 259
§1731. Design Requirements 259
§1733. Construction Monitoring and Acceptance Testing 260
§1735. Training 261
§1737. Operating and Emergency Procedures 262
§1739. Personnel Monitoring 262
§1741. Radiation Surveys 262
§1743. Detection of Leaking Sources 263
§1745. Inspection and Maintenance 263
§1747. Pool Water Purity 264
§1749. Attendance during Operation 264
§1751. Entering and Leaving the Radiation Room 264

§1753. Irradiation of Explosive or Flammable Materials 264
§1755. Records and Retention Periods 265
§1757. Reports 265
Chapter 20. Radiation Safety Requirements for Wireline Service Operations and Subsurface Tracer Studies 266
§2001. Purpose 266
§2002. Scope 266
§2003. Definitions 266
§2004. Prohibition 266
§2010. Limits on Levels of Radiation 267
§2011. Storage Precautions 267
§2012. Transport Precautions 267
§2013. Radiation Survey Instruments 267
§2014. Leak Testing of Sealed Sources 267
§2015. Quarterly Inventory 268
§2016. Utilization Records 268
§2017. Design, Performance, and Certification Criteria for Sealed Sources Used in Downhole Operations 268
§2018. Labeling 270
§2019. Inspection and Maintenance 270
Subchapter A. Requirements for Personnel Safety 270
§2020. Training Requirements 270
§2021. Operating and Emergency Procedures 271
§2022. Personnel Monitoring 271
Subchapter B. Precautionary Procedures in Logging and Subsurface Tracer Operations 271
§2031. Security 271
§2032. Handling Tools 272
§2033. Subsurface Tracer Studies 272
§2034. Particle Accelerators 272
§2036. Uranium Sinker Bars 272
Subchapter C. Radiation Surveys and Records 272
§2041. Radiation Surveys 272
§2042. Documents and Records Required at Field Stations 272
§2043. Documents and Records Required at Temporary Jobsites 273
Subchapter D. Notification 273
§2051. Notification of Incidents, Abandonment, and Lost Sources 273
§2099. Appendices A and B 274
Chapter 25. Fee Schedule 275
§2501. Scope and Purpose 275
§2502. Authority 275
§2503. Definitions 275

§2504. Application Fees 275
§2505. Annual Fees 275
§2506. Reciprocal Agreements—Licenses and Registrants 276
§2507. Reimbursements 276
§2508. Determination of Fee 276
§2509. Method of Payment 276
§2510. Late Payment Fee 276
§2511. Failure to Pay 277
§2512. Effective Date 277
§2513. Multiple Locations 277
§2599. Appendix A 278

Title 33
ENVIRONMENTAL QUALITY
Part XV. Radiation Protection

Chapter 1. General Provisions

§101. Scope

A. Except as otherwise specifically provided, these regulations apply to all persons who receive, possess, use, transfer, own, or acquire any source of radiation provided, however, that nothing in these regulations shall apply to any person to the extent such person is subject to regulation by the U.S. Nuclear Regulatory Commission.

B. Attention is directed to the fact that state regulation of source material, byproduct material, and special nuclear material in quantities not sufficient to form a critical mass is subject to the provisions of the agreement between the state and the U.S. Nuclear Regulatory Commission and to Parts 40 and 150 of the U.S. Nuclear Regulatory Commission's regulations (10 CFR Parts 40 and 150).

AUTHORITY NOTE: Promulgated in accordance with R.S. 30:2001 et seq.

HISTORICAL NOTE: Promulgated by the Department of Environmental Quality, Nuclear Energy Division, LR 13:569 (October 1987), amended by the Office of Air Quality and Radiation Protection, Radiation Protection Division, LR 18:34 (January 1992), amended by the Office of Environmental Assessment, Environmental Planning Division, LR 27:1225 (August 2001).

§102. Definitions and Abbreviations

As used in these regulations, these terms have the definitions set forth below. Additional definitions used only in a certain chapter may be found in that chapter.

A_1—the maximum activity of special form radioactive material permitted in a Type A package.

A_2—the maximum activity of radioactive material, other than special form, LSA, and SCO material, permitted in a Type A package. These values are either listed in, or may be derived in accordance with the procedure prescribed in, Appendix A of 10 CFR Part 71.

Absorbed Dose—the energy imparted by ionizing radiation per unit mass of irradiated material. The units of absorbed dose are the rad and the gray (Gy).

Accelerator-Produced Material—any material made radioactive by a particle accelerator.

Act—the Louisiana Environmental Quality Act, (R.S. 30:2001 et seq).

Activity—the rate of disintegration or transformation or decay of radioactive material. The units of activity are the becquerel (Bq) and the curie (Ci).

Address of Use—the building or buildings that are identified on the license and where radioactive material may be received, prepared, used, or stored.

Administrative Authority—the Secretary of the Department of Environmental Quality or his designee or the appropriate assistant secretary or his designee.

Adult—an individual 18 or more years of age.

Agreement State—any state with which the U.S. Nuclear Regulatory Commission or the U.S. Atomic Energy Commission has entered into an effective agreement under Subsection 274.b of the Atomic Energy Act of 1954, as amended (73 Stat. 689).

Airborne Radioactive Material—any radioactive material dispersed in the air in the form of dusts, fumes, particulates, mists, vapors, or gases.

Airborne Radioactivity Area—a room, enclosure, or area in which airborne radioactive materials exist in concentrations:

1. in excess of the derived air concentrations (DACs) specified in LAC 33:XV.499.Appendix B, Table I of these regulations; or

2. to such a degree that an individual present in the area without respiratory protective equipment could exceed, during the hours an individual is present in a week, an intake of 0.6 percent of the annual limit on intake (ALI) or 12 DAC-hours.

Alert—events that may occur, are in progress, or have occurred that could lead to a release of radioactive material but that the release is not expected to require a response by off-site response organizations to protect persons off-site.

Area of Use—a portion of a physical structure that has been set aside for the purpose of receiving, using, or storing radioactive material.

As Low As Is Reasonably Achievable (ALARA)—making every reasonable effort to maintain exposures to radiation as far below the dose limits in these regulations as is practical, consistent with the purpose for which the licensed or registered activity is undertaken, taking into account the state of technology, the economics of improvements in relation to state of technology, the economics of improvements in relation to benefits to the public health and safety, and other societal and socioeconomic considerations, and in relation to utilization of nuclear energy and licensed or registered sources of radiation in the public interest.

Authorized Medical Physicist—an individual who is identified as an authorized medical physicist or teletherapy physicist on:

1. a specific medical use license issued by the department, the U.S. Nuclear Regulatory Commission, or an agreement state;

2. a medical use permit issued by a U.S. Nuclear Regulatory Commission master material licensee;

3. a permit issued by the department, the U.S. Nuclear Regulatory Commission, or an agreement state broad scope medical use licensee; or

4. a permit issued by a U.S. Nuclear Regulatory Commission master material license broad scope medical use permittee.

Authorized Nuclear Pharmacist—a pharmacist who is:

1. board certified as a nuclear pharmacist by the Board of Pharmaceutical Specialties;

2. identified as an authorized nuclear pharmacist on a department, licensing state, Nuclear Regulatory Commission, or agreement state license that authorizes the use of radioactive material in the practice of nuclear pharmacy; or

3. identified as an authorized nuclear pharmacist on a permit issued by the department, licensing state, Nuclear Regulatory Commission, or agreement state specific licensee of broad scope authorized to permit the use of radioactive material in the practice of nuclear pharmacy.

Authorized User—a physician, dentist, or podiatrist who is:

1. board certified by at least one of the boards listed in LAC 33:XV.763.C.1, D.1, E.1, F.1, H.1, or I.1;

2. identified as an authorized user on a department, licensing state, Nuclear Regulatory Commission, or agreement state license that authorizes the medical use of radioactive material; or

3. identified as an authorized user on a permit issued by the department, licensing state, Nuclear Regulatory Commission, or agreement state specific licensee of broad scope authorized to permit the medical use of radioactive material.

Background Radiation—radiation from cosmic sources; naturally occurring radioactive materials, including radon, except as a decay product of source or special nuclear material, and including global fallout as it exists in the environment from the testing of nuclear explosive devices or from past nuclear accidents, such as Chernobyl, that contribute to background radiation and are not under the control of the licensee. Background radiation does not include radiation from source, byproduct, or special nuclear materials regulated by the department.

Becquerel—the SI unit of measurement of radioactivity; it is equal to one transformation per second. One curie is equal to 3.7×10^{10} becquerels.

Bioassay—the determination of kinds, quantities or concentrations and, in some cases, the locations of radioactive material in the human body, whether by direct measurement (in vivo counting) or by analysis and evaluation of materials excreted or removed from the human body. For purposes of these regulations, *radiobioassay* is an equivalent term.

Brachytherapy—a method of radiation therapy in which sealed sources are utilized to deliver a radiation dose at a distance of up to a few centimeters, by surface, intracavitary, or interstitial application.

Brachytherapy Source—a radioactive source or a manufacturer-assembled source train or a combination of these sources that is designed to deliver a therapeutic dose within a distance of a few centimeters.

Byproduct Material—

1. any radioactive material, except special nuclear material, yielded in or made radioactive by exposure to the radiation incident to the process of producing or utilizing special nuclear material; and

2. the tailings or wastes produced by the extraction or concentration of uranium or thorium (R.S. 30:2103) from ore processed primarily for its source material content, including discrete surface wastes resulting from uranium or thorium solution extraction processes. Underground ore bodies depleted by these solution extraction operations do not constitute byproduct material within this definition.

Calendar Quarter—any period consisting of not less than 12 consecutive weeks nor more than 14 consecutive weeks. The first calendar quarter of each year shall begin in January, and subsequent calendar quarters shall be so arranged that no day is included in more than one calendar quarter, and no day in any one year is omitted from inclusion within a calendar quarter. The method observed by the licensee or registrant for determining calendar quarters shall only be changed at the beginning of a year.

Calibration—the determination of:

1. the response or reading of an instrument relative to a series of known radiation values over the range of the instrument; or

2. the strength of a source of radiation relative to a standard.

CFR—Code of Federal Regulations.

Chelating Agent—amine polycarboxylic acids, hydroxy-carboxylic acids, gluconic, and polycarboxylic acids.

Chiropractor—an individual licensed in the practice of chiropractic, as provided in R.S. 37:2801 et seq.

Client's Address—the area of use or a temporary jobsite for the purpose of providing mobile medical service in accordance with LAC 33:XV.726.

Collective Dose—the sum of the individual doses received in a given period of time by a specified population from exposure to a specified source of radiation.

Committed Dose Equivalent ($H_{T,50}$)—the dose equivalent to organs or tissues of reference (T) that will be received

from an intake of radioactive material by an individual during the 50-year period following the intake.

Committed Effective Dose Equivalent ($H_{E,50}$)—the sum of the products of the weighting factors applicable to each of the body organs or tissues that are irradiated and the committed dose equivalent to each of these organs or tissues ($H_{E,50} = \sum w_T H_{T,50}$).

Controlled Area—an area, outside a restricted area but inside the site boundary, to which access can be limited by the licensee for any reason.

Curie—a unit of quantity of activity. One curie (Ci) is that quantity of radioactive material that decays at the rate of 3.7 x 10^{10} disintegrations or transformations per second (dps or tps). Commonly used submultiples of the curie are the millicurie and the microcurie. One millicurie (mCi) is equal to 0.001 curie, which is equal to 3.7 x 10^7 dps. One microcurie (μCi) is equal to 0.000001 curie, which is equal to 3.7 x 10^4 dps. One curie is equal to 3.7 x 10^{10} becquerels.

Decommission—to remove (as a facility) safely from service and reduce residual radioactivity to a level that permits:

1. release of the property for unrestricted use and termination of license; or

2. release of the property under restricted conditions and termination of the license.

Dedicated Check Source—a radioactive source that is used to assure the constant operation of a radiation detection or measurement device over several months or years. This source may also be used for other purposes.

Deep Dose Equivalent (H_d)—the dose equivalent at a tissue depth of 1 centimeter (1000 mg/cm^2), which applies to external whole body exposure.

Dentist—an individual licensed by a state or territory of the United States, the District of Columbia, or the Commonwealth of Puerto Rico to practice dentistry.

Department—the Department of Environmental Quality.

Depleted Uranium—the source material uranium in which the isotope uranium-235 is less than 0.711 weight percent of the total uranium present. Depleted uranium does not include special nuclear material.

Distinguishable From Background—the detectable concentration of a radionuclide that is statistically different from the background concentration of that radionuclide in the vicinity of the site or, in the case of structures, in similar materials using adequate measurement technology, survey, and statistical techniques.

Dose—a generic term that means absorbed dose, dose equivalent, effective dose equivalent, committed dose equivalent, committed effective dose equivalent, total organ dose equivalent, or total effective dose equivalent. For purposes of these regulations, *radiation dose* is an equivalent term.

Dose Commitment—the total radiation dose to a part of the body that will result from retention in the body of radioactive material. For purposes of estimating the dose commitment, it is assumed that from the time of intake the period of exposure to retained material will not exceed 50 years.

Dose Equivalent (H_T)—the product of the absorbed dose in tissue, quality factor, and all other necessary modifying factors at the location of interest. The units of dose equivalent are the sivert (Sv) and rem.

Effective Dose Equivalent (H_E)—the sum of the products of the dose equivalent to each organ or tissue (H_T) and the weighting factor (w_T) applicable to each of the body organs or tissues that are irradiated ($H_E = \sum w_T H_T$).

Embryo/Fetus—the developing human organism from conception until the time of birth.

Emergency—any condition existing outside of the bounds of nuclear operating sites owned or licensed by a federal agency, and further any condition existing within or outside of the jurisdictional confines of a facility licensed or registered by the department and arising from the presence of byproduct material, source material, special nuclear material, or any other radioactive material or source of radiation that is endangering or could reasonably be expected to endanger the health and safety of the public or to contaminate the environment (R.S. 30:2105).

Entrance or Access Point—any opening through which an individual or extremity of an individual could gain access to radiation areas or to licensed or registered radioactive materials. This includes entry or exit portals of sufficient size to permit human entry, irrespective of their intended use.

Explosive Material—any chemical compound, mixture, or device that produces a substantial instantaneous release of gas and heat spontaneously or by contact with sparks or flame as referenced in 49 CFR 173.53-173.114(a).

Exposure—being exposed to ionizing radiation or to radioactive material.

Exposure Rate—the exposure per unit of time, such as Roentgen per minute (R/min) and milliroentgen per hour (mR/hr).

External Dose—that portion of the dose equivalent received from any source of radiation outside the body.

Extremity—hand, elbow, arm below the elbow, foot, knee, and leg below the knee.

Former U.S. Atomic Energy Commission (AEC) or U.S. Nuclear Regulatory Commission (NRC) Licensed Facilities—nuclear reactors, nuclear fuel reprocessing plants, uranium enrichment plants, or critical mass experimental facilities where AEC or NRC licenses have been terminated.

Generally Applicable Environmental Radiation Standards—standards issued by the U.S. Environmental Protection Agency (EPA) under the authority of the Atomic Energy Act of 1954, as amended, that impose limits on

radiation exposures or levels, or concentrations or quantities of radioactive material, in the general environment outside the boundaries of locations under the control of persons possessing or using radioactive material.

Gray—the SI unit of absorbed dose; it is equal to one Joule per kilogram. One rad is equal to 0.01 gray (Gy).

Hazardous Waste—those wastes designated as hazardous by U.S. Environmental Protection Agency regulations in 40 CFR 261 and by *Louisiana Administrative Code* regulations in LAC 33:V.

Healing Art—the professional disciplines authorized by the laws of this state to use radiation or radioactive material in the diagnosis or treatment of human or animal disease.

High Dose-Rate Remote Afterloader—a brachytherapy device that remotely delivers a dose rate in excess of 12 gray (1200 rads) per hour at the point or surface where the dose is prescribed.

High-Level Waste—unreprocessed spent fuel rods or that waste resulting from the reprocessing of spent fuel rods.

High-Radiation Area—an area, accessible to individuals, in which radiation levels from radiation sources external to the body could result in an individual receiving a dose equivalent in excess of 100 millirems (one millisievert) in one hour at 30 centimeters from the radiation source or 30 centimeters from any surface that the radiation penetrates.

Human Use—the internal or external administration of radiation or radioactive materials to human beings.

Individual—any human being.

Individual Monitoring—the assessment of:

1. dose equivalent by the use of individual monitoring devices or by the use of survey data; or

2. committed effective dose equivalent by bioassay or by determination of the time-weighted air concentration to which an individual has been exposed, that is, DAC-hours. (See the definition of *DAC-Hours* in LAC 33:XV.Chapter 4.)

Individual Monitoring Devices—devices designed to be worn by a single individual for the assessment of dose equivalent. For purposes of these regulations, *personnel dosimeter* and *dosimeter* are equivalent terms. Examples of individual monitoring devices are film badges, thermoluminescence dosimeters (TLDs), pocket ionization chambers, and personal air sampling devices.

Inspection—an official examination or observation including, but not limited to, tests, surveys, and monitoring to determine compliance with rules, regulations, orders, requirements, and conditions of the department and/or administrative authority.

Instrument Traceability—the ability to show that an instrument has been calibrated at specified time intervals using a national standard or a transfer standard. If a transfer standard is used, the calibration must be at a laboratory accredited by a program that requires continuing participation in measurement quality assurance with the National Institute of Standards and Technology or other equivalent national or international programs.

Interlock—a device arranged or connected such that the occurrence of an event or condition is required before a second event or condition can occur or continue to occur.

Internal Dose—that portion of the dose equivalent received from radioactive material taken into the body.

Ionizing Radiation—any electromagnetic or particulate radiation capable of producing ions, directly or indirectly, in its passage through matter. It includes any or all of the following: alpha rays, beta rays, gamma rays, X-rays, neutrons, high-speed electrons, high-speed protons, and other atomic particles, but not sound or radio waves, or visible, infrared, or ultraviolet light.

Lens Dose Equivalent (LDE)—the external exposure of the lens of the eye, which is taken as the dose equivalent at a tissue depth of 0.3 centimeter (300 mg/cm^2).

Licensed (or Registered) Material—radioactive material received, possessed, used, transferred, or disposed of under a general or specific license (or registration) issued by the department.

Licensee—any person who is licensed by the department in accordance with the act and regulations promulgated by the administrative authority (R.S. 30:2105).

Licenses—general licenses and specific licenses.

1. *General License*—a license effective pursuant to regulations promulgated by the administrative authority without the filing of an application to transfer, acquire, own, possess, or use quantities of, or devices or equipment utilizing, byproduct, source or special nuclear materials, technologically enhanced natural radioactive material, or other radioactive material occurring naturally or produced artificially.

2. *Specific License*—a license issued after application to the department to use, manufacture, produce, transfer, receive, acquire, own, or possess quantities of, or devices or equipment utilizing byproduct, source, or special nuclear materials, technologically enhanced natural radioactive material, or other radioactive material occurring naturally or produced artificially (R.S. 30:2105).

Licensing State—any state with regulations equivalent to or more stringent than "Suggested State Regulations for Control of Radiation" relating to, and an effective program for, the regulatory control of naturally occurring or accelerator-produced radioactive material (NARM).

Limits (Dose Limits)—the permissible upper bounds of radiation doses.

Lost or *Missing Licensed (or Registered) Source of Radiation*—licensed (or registered) source of radiation whose location is unknown. This definition includes but is not limited to, radioactive material that has been shipped but has not reached its planned destination and whose location cannot be readily traced in the transportation system.

Low Dose-Rate Remote Afterloader—a brachytherapy device that remotely delivers a dose rate of less than or equal to 2 gray (200 rads) per hour at the point or surface where the dose is prescribed.

Major Processor—a user processing, handling, or manufacturing radioactive material exceeding Type A quantities as unsealed sources of material, or exceeding four times Type B quantities as sealed sources, but not including nuclear medicine programs, universities, industrial radiographers, or small industrial programs. Type A and B quantities are defined in 10 CFR 71.4.

Management—the chief executive officer or that individual's designee.

Manual Brachytherapy—a type of brachytherapy in which the brachytherapy sources (e.g., seeds, ribbons) are manually placed topically on or inserted either into the body cavities that are in close proximity to a treatment site or directly into the tissue volume.

Medical Event—an event that meets the criteria in LAC 33:XV.613.A, 712.A, or 915.A.

Medical Institution—an organization in which several medical disciplines are practiced and that has inpatient facilities.

Medical Use—the intentional internal or external administration of radioactive material, or the radiation therefrom, to patients or human research subjects under the supervision of an *authorized user* as defined in this Section.

Medium Dose-Rate Remote Afterloader—a brachytherapy device that remotely delivers a dose rate of greater than 2 gray (200 rads), but less than 12 gray (1200 rads), per hour at the point or surface where the dose is prescribed.

Member of the Public—any individual, except when that individual is receiving an occupational dose.

Metric Prefixes and Abbreviations—

c	centi	($=10^{-2}$)	f	femto	($=10^{-15}$)
m	milli	($=10^{-3}$)	k	kilo	($=10^{3}$)
μ	micro	($=10^{-6}$)	M	mega	($=10^{6}$)
n	nano	($=10^{-9}$)	G	giga	($=10^{9}$)
p	pico	($=10^{-12}$)	T	tera	($=10^{12}$)

Minor—an individual less than 18 years of age.

Mobile Medical Service—the transportation of radioactive material to, and its medical use at, the client's address.

Mobile Nuclear Medicine Service—the transportation and medical use of radioactive material.

Monitoring—the measurement of radiation, radioactive material concentrations, surface area activities, or quantities of radioactive material and the use of the results of these measurements to evaluate potential exposures and doses. For purposes of these regulations, *radiation monitoring* and *radiation protection monitoring* are equivalent terms.

Natural Radioactivity—radioactivity from naturally occurring radioactive materials (NORM).

Naturally Occurring or Accelerator-Produced Radioactive Material (NARM)—any nuclide that is radioactive in its natural physical state (i.e., not man-made) or that has been made radioactive by exposure to an accelerator beam. This material does not include source, byproduct, or special nuclear material.

Nuclear Regulatory Commission (NRC)—the U.S. Nuclear Regulatory Commission or its duly authorized representatives.

Occupational Dose—the dose received by an individual in the course of employment in which the individual's assigned duties for the licensee or registrant involve exposure to sources of radiation and/or radioactive material from licensed and unlicensed sources of radiation, whether in the possession of the licensee, registrant, or other person. Occupational dose does not include dose received: from background radiation, from any medical administration the individual has received, from exposure to individuals administered radioactive material and released in accordance with LAC 33:XV.725, from voluntary participation in medical research programs, or as a member of the public.

Ore Refineries—all processors of ore containing natural radioactivity.

Output—the exposure rate, dose rate, or a quantity related in a known manner to these rates from a brachytherapy source or a teletherapy unit, a remote afterloader, or a gamma stereotactic radiosurgery unit for a specified set of exposure conditions.

Package—the packaging together with its radioactive contents as presented for transport.

Particle Accelerator—any machine capable of accelerating electrons, protons, deuterons or other charged particles in a vacuum and of discharging the resultant particulate or other radiation into a medium at energies usually in excess of l million electron volts.

Patient Intervention—actions by the patient or human research subject, whether intentional or unintentional, such as dislodging or removing treatment devices or prematurely terminating the administration.

Person—any individual, corporation, partnership, firm, association, trust, estate, public or private institution, group, agency, political subdivision of this state or any other state or political subdivision or agency thereof, and any legal successor, representative, agent, or agency of the foregoing, other than the U.S. Nuclear Regulatory Commission or federal government agencies licensed by the U.S. Nuclear Regulatory Commission (R.S. 30:2105).

Personnel-Monitoring Equipment—devices such as film badges, pocket dosimeters, or thermoluminescent dosimeters

designed to be worn or carried by an individual for the purpose of estimating the dose received by the individual.

Pharmacist—any individual licensed by a state or territory of the United States, the District of Columbia, or the Commonwealth of Puerto Rico to practice pharmacy.

Physician—a medical doctor or doctor of osteopathy licensed by a state or territory of the United States, the District of Columbia, or the Commonwealth of Puerto Rico to prescribe drugs in the practice of medicine, or who is authorized to practice medicine under the provisions of R.S. 37:1261 et seq.

Podiatrist—an individual licensed by a state or territory of the United States, the District of Columbia, or the Commonwealth of Puerto Rico to practice podiatry.

Preceptor—an individual who provides or directs the training and experience required for an individual to become an authorized user, an authorized medical physicist, an authorized nuclear pharmacist, or a radiation safety officer.

Prescribed Dosage—the quantity of radiopharmaceutical activity as documented:

1. in a written directive; or

2. either in the diagnostic clinical procedures manual or in any appropriate record in accordance with the directions of the authorized user for diagnostic procedures.

Prescribed Dose—

1. for gamma stereotactic radiosurgery, the total dose as documented in the written directive;

2. for teletherapy, the total dose and dose per fraction as documented in the written directive; or

3. for manual brachytherapy, either the total source strength and exposure time or the total dose, as documented in the written directive; or

4. for remote brachytherapy afterloaders, the total dose and dose per fraction in the written directive.

Principal Activities—activities authorized by the license that are essential to achieving the purpose(s) for which the license was issued or amended. Storage during which no licensed material is accessed for use or disposal and activities incidental to decontamination or decommissioning are not principal activities.

Protective Apron—an apron made of radiation-attenuating materials used to reduce exposure to radiation.

Public Dose—the dose received by a member of the public from exposure to sources of radiation and/or radioactive material released from licensed or registered operations. Public dose does not include occupational dose, dose received from background radiation, dose received from any medical administration the individual has received, dose received from exposure to individuals administered radioactive material and released in accordance with LAC 33:XV.725, or dose received from voluntary participation in medical research programs.

Pulsed Dose-Rate Remote Afterloader—a special type of remote afterloading brachytherapy device that uses a single source capable of delivering dose rates in the "high dose-rate" range, but:

1. is approximately one-tenth of the activity of typical high dose-rate remote afterloader sources; and

2. is used to simulate the radiobiology of a low dose-rate treatment by inserting the source for a given fraction of each hour.

Pyrophoric Liquid—any liquid that ignites spontaneously in dry or moist air at or below 130°F (54.4°C), or any solid material, other than one classed as an explosive, that under normal conditions is liable to cause fires through friction, retained heat from manufacturing or processing, or that can be ignited readily and, when ignited, burns so vigorously and persistently as to create a serious transportation, handling, or disposal hazard. Included are spontaneously combustible and water-reactive materials.

Qualified Expert—an individual who has demonstrated to the satisfaction of the department that he or she possesses the knowledge and training to measure ionizing radiation parameters, to evaluate safety techniques, and to advise regarding radiation protection needs.

Quality Factor (Q)—the modifying factor, listed in Tables I and II of this Section, that is used to derive dose equivalent from absorbed dose.

Rad—a special unit of absorbed dose. One rad equals one hundredth (0.01) of a Joule per kilogram of material. For example, if tissue is the material of interest, then 1 rad equals 100 ergs per gram of tissue. The SI unit of absorbed dose is the gray (Gy). One gray is equal to one Joule per kilogram.

Radiation—any electromagnetic or ionizing radiation including gamma rays and X-rays, alpha and beta particles, high-speed electrons, neutrons, high-speed protons, and other nuclear particles, but not sound waves. (R.S. 30:2105.) Unless specifically stated otherwise, these regulations apply only to ionizing radiation.

Radiation Area—an area, accessible to individuals, in which radiation levels could result in an individual receiving a dose equivalent in excess of five millirems (0.05 millisievert) in one hour at 30 centimeters from the radiation source or from any surface that the radiation penetrates, or in any five consecutive days, a dose in excess of 100 millirems (one millisievert).

Radiation Machine—any device capable of producing radiation except those which produce radiation only from radioactive material.

Radiation Safety Officer—one who has the knowledge and responsibility to apply appropriate radiation protection principles and regulations to control exposure to individuals and the environment. A *radiation safety officer* shall be identified on:

1. a specific medical use license issued by the agreement state or Nuclear Regulatory Commission; or

2. a medical use permit issued by a Nuclear Regulatory Commission master material licensee.

Radiation Therapy Simulation System—a radiographic or fluoroscopic X-ray system intended for localizing the volume to be exposed during radiation therapy and confirming the position and size of the therapeutic irradiation field.

Radioactive Material—any material, whether solid, liquid, or gas, that emits radiation spontaneously (R.S. 30:2105).

Radioactivity—the transformation of unstable atomic nuclei by the emission of radiation. A unit of quantity of radioactivity is the curie (Ci). The SI unit of measurement of radioactivity is the Becquerel (Bq), which is equal to one transformation per second (tps). One curie is equal to 3.7 x 10^{10} Bq.

Radiological Physicist—an individual who:

1. is certified in Therapeutic Radiological Physics or Radiological Physics by the American Board of Radiology, or in radiation oncology physics by the American Board of Medical Physics; or

2. has a master's or a doctor's degree in physics, biophysics, radiological physics, health physics, or nuclear engineering; has had one year's full-time training in therapeutic radiological physics; and has had one year's full-time work experience in a radiotherapy facility where the individual's duties involved calibration and spot checks of a medical accelerator or a sealed source teletherapy unit; or

3. has a bachelor's degree in physics, biophysics, radiological physics, health physics, or nuclear engineering; and has performed full-time radiation physics work for a period of at least five years in therapeutic radiological physics in radiotherapy facilities where the individual's duties involved calibration and spot checks of a medical accelerator or sealed source teletherapy unit.

Recordable Event—in medical procedures, the administration of:

1. a radiopharmaceutical or radiation without a written directive when a written directive is required;

2. a radiopharmaceutical or radiation when a written directive is required, without daily recording of each administered radiopharmaceutical dosage or radiation dose in the appropriate record;

3. a radiopharmaceutical dosage greater that 30 microcuries of either sodium iodide I-125 or I-131 when both:

a. the administered dosage differs from the prescribed dosage by more than 10 percent of the prescribed dosage; and

b. the difference between the administered dosage and prescribed dosage exceeds 15 microcuries;

4. a therapeutic radiopharmaceutical dosage, other than sodium iodide I-125 or I-131, when the administered dosage differs from the prescribed dosage by more than 10 percent of the prescribed dosage;

5. a teletherapy radiation dose when the calculated weekly administered dose exceeds the weekly prescribed dose by 15 percent or more; or

6. a brachytherapy radiation dose when the calculated administered dose differs from the prescribed dose by more than 10 percent of the prescribed dose.

Registrant—any person who owns or possesses any radioactive material or device capable of emitting radiation and who is legally obligated to register with the department pursuant to these regulations and the act.

Registration—the identification of any material or device capable of emitting radiation, together with such other information as the owner of such material or device is required to furnish by rules and regulations adopted hereunder (R.S. 30:2105).

Regulations of the U.S. Department of Transportation (U.S. DOT)—the regulations in 49 CFR 100-189.

Rem—a measure of the dose of any radiation to body tissue in terms of its estimated biological effect relative to a dose received from an exposure to one Roentgen (R) of X-rays. One millirem (mRem) is equal to 0.001 Rem. Rem is a special unit of dose equivalent. (See *dose equivalent*.) For the purpose of these regulations, any of the following is considered to be equivalent to a dose of one Rem:

1. an exposure of one Roentgen of X or gamma radiation;

2. absorbed dose of one rad due to X, gamma, or beta radiation;

3. an absorbed dose of 0.05 rad due to particles heavier than protons and with sufficient energy to reach the lens of the eye; or

4. an absorbed dose of 0.1 rad due to neutrons or high-energy protons.

[NOTE: If it is more convenient to measure the neutron flux, or equivalent, than to determine the neutron absorbed dose in rads, one Rem of neutron radiation may, for purposes of these regulations, be assumed to be equivalent to 14 million (1.4 x $l0^7$) neutrons per square centimeter incident upon the body; or, if there exists sufficient information to estimate with reasonable accuracy the approximate distribution in energy of the neutrons, the incident number of neutrons per square centimeter equivalent to one Rem may be estimated from the table in LAC 33:XV.199.Appendix A.]

Research and Development—theoretical analysis, exploration, or experimentation; or the extension of investigative findings and theories of a scientific or technical nature into practical application for experimental and demonstration purposes, including the experimental production and testing of models, devices, equipment, materials, and processes. Research and development does not include the internal or external administration of radiation or radioactive material to human beings.

Residual Radioactivity—radioactivity in structures, materials, soils, groundwater, and other media at a site resulting from activities under the licensee's control. This includes radioactivity from all licensed and unlicensed sources used by the licensee, but excludes background radiation. It also includes radioactive materials remaining at the site as a result of routine or accidental releases of radioactive material at the site and previous burials at the site, even if those burials were made in accordance with the provisions of LAC 33:XV.Chapter 4.

Restricted Area—an area, access to which is limited by the licensee or registrant for the purpose of protecting individuals against undue risks from exposure to sources of radiation. A restricted area does not include areas used as residential quarters, but separate rooms in a residential building may be set apart as a restricted area.

Roentgen (R)—a special unit of exposure. One Roentgen equals 2.58 x 10^{-4} Coulomb/kilogram of air. (See *exposure.*)

Sealed Source—any radioactive material that has been encased in a capsule constructed in such a manner as to prevent leakage or escape of any radioactive material.

Sealed Source and Device Registry—the national registry that contains all the registration certificates, generated by both the U.S. Nuclear Regulatory Commission and the agreement states, that summarize the radiation safety information for the sealed sources and devices and describe the licensing and use conditions approved for the products.

Shallow Dose Equivalent (H_s)—applies to the external exposure of the skin of the whole body or the skin of an extremity, and is taken as the dose equivalent at a tissue depth of 0.007 centimeter (7 mg/cm^2).

SI—the International System of Units.

Sievert (Sv)—the SI unit of dose equivalent; it is equal to one Joule per kilogram. One Rem is equal to 0.01 Sievert.

Site Area Emergency—events that may occur, are in progress, or have occurred that could lead to a significant release of radioactive material and that could require a response by off-site response organizations to protect persons off-site.

Site Boundary—that line beyond which the land or property is not owned, leased, or otherwise controlled by the licensee or registrant.

Source Material—uranium or thorium, or any combination thereof, in any physical or chemical form; or ores that contain by weight 0.05 percent or more of uranium, thorium, or any combination thereof. Source material does not include special nuclear material as hereinafter defined (R.S. 30:2105).

Source of Radiation—any radioactive material or any device or equipment emitting or capable of producing radiation (R.S. 30:2105).

Source Traceability—the ability to show that a radioactive source has been calibrated either by the national standards laboratory of the National Institute of Standards and Technology (NIST) or by a laboratory that participates in a continuing measurement quality assurance program with NIST or other equivalent national or international programs.

Special Form Material—radioactive material which satisfies the following:

1. it is either a single solid piece or is contained in a sealed capsule that can be opened only by destroying the capsule;

2. the piece or capsule has at least one dimension not less than 5 millimeters (0.197 inch);

3. it satisfies the test requirements of 10 CFR 71.75; and

4. a special form encapsulation designed in accordance with the requirements of 10 CFR 71.4(o) in effect on June 30, 1983, and constructed prior to July 1, 1985, may continue to be used. A special form encapsulation either designed or constructed after June 30, 1985, must meet requirements of this Section applicable at the time of its design or construction.

Special Nuclear Material—either of the following types of material:

1. plutonium, uranium-233, uranium enriched in the isotope U-233 or in the isotope U-235, and any other material that the U.S. Nuclear Regulatory Commission, pursuant to the provisions of Section 51 of the Atomic Energy Act of 1954, as amended, determines to be special nuclear material, but does not include source material; or

2. any material artificially enriched by any of the foregoing, but not including source material (R.S. 30:2105).

Special Nuclear Material in Quantities Not Sufficient to Form Critical Mass—uranium enriched in the isotope U-235 in quantities not exceeding 350 grams of contained U-235; uranium-233 in quantities not exceeding 200 grams; plutonium in quantities not exceeding 200 grams; or any combination of them in accordance with the following formula: For each kind of special nuclear material, determine the ratio between the quantity of that special nuclear material and the quantity specified above for the same kind of special nuclear material. The sum of such ratios for all of the kinds of special nuclear material in combination shall not exceed "1" (i.e., unity). For example, the following quantities in combination would not exceed the limitation and are within the formula:

$$\frac{175\,(grams\ contained\ U\text{-}235)}{350} + \frac{50\,(grams\ U\text{-}233)}{200} + \frac{50\,(grams\ Pu)}{200} = 1$$

Stereotactic Radiosurgery—the use of external radiation in conjunction with a stereotactic guidance device to very precisely deliver a therapeutic dose to a tissue volume.

Structured Educational Program—an educational program designed to impart particular knowledge and practical education through interrelated studies and supervised training.

Survey—an evaluation of the production, use, release, disposal, transfer, and/or presence of sources of radiation under a specific set of conditions to determine actual or potential radiation hazards. When appropriate, such evaluation includes, but is not limited to, tests, physical examination, and measurements of levels of radiation or concentrations of radioactive materials present.

*Technologically Enhanced Natural Radioactive Material (*hereinafter referred to as *TENR)*—natural sources of radiation that would not normally appear without some technological activity not expressly designed to produce radiation (R.S. 30:2105).

Teletherapy—therapeutic irradiation in which the source of radiation is at a distance from the body.

Teletherapy Physicist—refer to radiological physicist.

Temporary Jobsite—any location where sources of radiation are used other than the location(s) listed in a license or registration certificate for nonlicensed sources of radiation.

Test—the process of verifying compliance with an applicable regulation.

Therapeutic Dosage—a dosage of unsealed radioactive material that is intended to deliver a radiation dose to a patient or human research subject for palliative or curative treatment.

Therapeutic Dose—a radiation dose delivered from a source containing radioactive material to a patient or human research subject for palliative or curative treatment.

These Regulations—all chapters of the Louisiana Radiation Protection Regulations (LAC 33:XV).

Total Effective Dose Equivalent (TEDE)—the sum of the deep dose equivalent for external exposures and the committed effective dose equivalent for internal exposures.

Traceable to National Standards—see Instrument Traceability or Source Traceability.

Treatment Site—the anatomical description of the tissue intended to receive a radiation dose, as described in a written directive.

Type of Use—use of radioactive material as described in LAC 33:XV.729, 731, 735, 739, 741, or 747.

U.S. Department of Energy—the Department of Energy established by Public Law 95-91, August 4, 1977, 91 Stat. 565, 42 U.S.C. 7101 et seq., to the extent that the Department of Energy exercises functions formerly vested in the U.S. Atomic Energy Commission, its chairman, members, officers, and components and transferred to the U.S. Energy Research and Development Administration and to the administrator thereof pursuant to Section 104(b), (c), and (d) of the Energy Reorganization Act of 1974 (Public Law 93-438, October 11, 1974, 88 Stat. 1233 at 1237, effective January 19, 1975) and retransferred to the Secretary of Energy pursuant to Section 301(a) of the Department of Energy Organization Act (Public Law 95-91, August 4, 1977, 91 Stat. 565 at 577-578, 42 U.S.C. 7151, effective October 1, 1977).

Unit Dosage—a dosage prepared for medical use for administration as a single dosage to a patient or human research subject without any further manipulation of the dosage after it is initially prepared.

Units of Activity—for purposes of these regulations, activity is expressed in the SI unit of becquerel (Bq) or in the special unit of curie (Ci), or their multiples, or disintegrations or transformations per unit of time:

1. one becquerel (Bq) = 1 disintegration or transformation per second (dps or tps).

2. one curie (Ci) = 3.7E+10 disintegrations or transformations per second (dps or tps) = 3.7E+10 becquerel (Bq) = 2.22E+12 disintegrations or transformations per minute (dpm or tpm).

Units of Exposure and Dose—

1. As used in these regulations, the unit of exposure is the coulomb per kilogram (C/kg) of air. One roentgen is equal to 2.58E-4 coulomb per kilogram of air.

2. As used in these regulations, the units of dose are:

a. *Gray (Gy)*—the SI unit of absorbed dose. One gray is equal to an absorbed dose of 1 joule per kilogram (100 rad).

b. *Rad*—the special unit of absorbed dose. One rad is equal to an absorbed dose of 100 erg per gram or 0.01 joule per kilogram (0.01 Gy).

c. *Rem*—the special unit of any of the quantities expressed as dose equivalent. The dose equivalent in rem is equal to the absorbed dose in rad multiplied by an appropriate quality factor (1 rem = 0.01 Sv).

d. *Sievert*—the SI unit of any of the quantities expressed as dose equivalent. The dose equivalent in sieverts is equal to the absorbed dose in gray multiplied by an appropriate quality factor (1 Sv = 100 rem).

3. As used in these regulations, the quality factors for converting absorbed dose to dose equivalent are shown in Table I.

Table I Quality Factors and Absorbed Dose Equivalencies		
Type of Radiation	**Quality Factor (Q)**	**Absorbed Dose Equal to a Unit Dose Equivalent[a]**
X, gamma, or beta radiation and high speed electrons	1	1.0
Alpha particles, multiple-charged particles, fission fragments, and heavy particles of unknown charge	20	0.05
Neutrons of unknown energy	10	0.1
High energy protons	10	0.1

[a]This value is the absorbed dose in gray equal to 1 Sv or the absorbed dose in rad equal to 1 rem.

4. If it is more convenient to measure the neutron fluence rate than to determine the neutron dose equivalent rate in sievert per hour or rem per hour, as provided in Paragraph 3 of this definition, 0.01 Sv (1 rem) of neutron radiation of unknown energies may, for purposes of these regulations, be assumed to result from a total fluence of 25 million neutrons per square centimeter incident upon the body. If sufficient information exists to estimate the approximate energy distribution of the neutrons, the licensee or registrant may use the fluence rate per unit dose equivalent or the appropriate Q value from Table II to convert a measured tissue dose in gray or rad to dose equivalent in sievert or rem.

Table II Mean Quality Factors, Q, and Fluence Per Unit Dose Equivalent For Monoenergetic Neutrons			
Neutron Energy (MeV)	**Quality Factor[a] (Q)**	**Fluence per Unit Dose Equivalent (neutrons cm^{-2} rem^{-1})**	**Fluence per Unit Dose Equivalent[b] (neutrons $cm^{-2}Sv^{-1}$)**
2.5E-8 (Thermal)	2	980E+6	980E+8
1E-7	2	980E+6	980E+8
1E-6	2	810E+6	810E+8
1E-5	2	810E+6	810E+8
1E-4	2	840E+6	840E+8
1E-3	2	980E+6	980E+8
1E-2	2.5	1010E+6	1010E+8
1E-1	7.5	170E+6	170E+8
5E-1	11	39E+6	39E+8
1	11	27E+6	27E+8
2.5	9	29E+6	29E+8
5	8	23E+6	23E+8
7	7	24E+6	24E+8
10	6.5	24E+6	24E+8
14	7.5	17E+6	17E+8
20	8	16E+6	16E+8
40	7	14E+6	14E+8
60	5.5	16E+6	16E+8
1E+2	4	20E+6	20E+8
2E+2	3.5	19E+6	19E+8
3E+2	3.5	16E+6	16E+8
4E+2	3.5	14E+6	14E+8

[a]Value of quality factor (Q) at the point where the dose equivalent is maximum in a 30-centimeter diameter cylinder tissue-equivalent phantom.

[b]Monoenergetic neutrons incident normally on a 30-centimeter diameter cylinder tissue-equivalent phantom.

Unrefined and Unprocessed Ore—ore in its natural form prior to any processing, such as grinding, roasting, beneficiating, or refining.

Unrestricted Area (an Uncontrolled Area)—an area, access to which is neither limited nor controlled by the licensee or registrant. For purposes of these regulations, *uncontrolled area* is an equivalent term.

Waste—those low-level radioactive wastes that are acceptable for disposal in a land disposal facility. For the purposes of this definition, low-level waste has the same meaning as in the Low-Level Radioactive Waste Policy Act, P.L. 96-573, as amended by P.L. 99-240, effective January 15, 1986; that is, radioactive waste:

1. not classified as high-level radioactive waste, spent nuclear fuel, or byproduct material as defined in Section 11.e.(2) of the Atomic Energy Act (uranium or thorium tailings and waste); and

2. classified as low-level radioactive waste consistent with existing law and in accordance with Paragraph 1 above by the U.S. Nuclear Regulatory Commission.

Waste-Handling Licensees—persons licensed to receive and store radioactive wastes prior to disposal and/or persons licensed to dispose of radioactive waste.

Week—seven consecutive days starting on Sunday.

Whole Body—for purposes of external exposure, head, trunk, including male gonads, arms above the elbow, or legs above the knee.

Worker—an individual engaged in work under a license or registration issued by the department and controlled by a licensee or registrant, but not including the licensee or registrant.

Working Level (WL)—any combination of short-lived radon daughters (for radon-222: polonium-218, lead-214, bismuth-214, and polonium-214; and for radon-220: polonium-216, lead-212, bismuth-212, and polonium-212) in one liter of air, without regard to the degree of equilibrium, that will result in the ultimate emission of 1.3×10^5 MeV of alpha particle energy.

Working-Level Month (WLM)—the occupational exposure incurred in one working month of 170 hours by individuals in an atmosphere containing radon daughter products; e.g., one working month in a mine atmosphere containing one working level of radon daughter products equals one WLM.

Written Directive—an order in writing for a specific patient or human research subject, dated and signed by an authorized user prior to the administration of a radiopharmaceutical or radiation, except as specified in Paragraph 6 of this definition, containing the following information:

1. for any administration of quantities greater than 30 microcuries of either sodium iodide I-125 or I-131: the dosage;

2. for a therapeutic administration of a radiopharmaceutical other than sodium iodide I-125 or I-131: the radiopharmaceutical, dosage, and route of administration;

3. for gamma stereotactic radiosurgery: target coordinates, collimator size, plug pattern, and total dose;

4. for teletherapy: the total dose, dose per fraction, treatment site, and overall treatment period;

5. for high-dose-rate remote afterloading brachytherapy: the radioisotope, treatment site, and total dose; or

6. for all other brachytherapy:

a. prior to implantation: the radioisotope, number of sources, and source strengths; and

b. after implantation but prior to completion of the procedure: the radioisotope, treatment site, and total source strength and exposure time (or, equivalently, the total dose).

Year—the period of time beginning in January used to determine compliance with the provisions of these regulations. The licensee or registrant may change the starting date of the year used to determine compliance by the licensee or registrant provided that the change is made at the beginning of the year and that no day is omitted or duplicated in consecutive years.

AUTHORITY NOTE: Promulgated in accordance with R.S. 30:2001 et seq.

HISTORICAL NOTE: Promulgated by the Department of Environmental Quality, Nuclear Energy Division, LR 13:569 (October 1987), amended by Office of Air Quality and Radiation Protection, Radiation Protection Division, LR 18:34 (January 1992), LR 19:1421 (November 1993), LR 20:650 (June 1994), LR 22:967 (October 1996), LR 24:2089 (November 1998), repromulgated LR 24:2242 (December 1998), amended by the Office of Environmental Assessment, Environmental Planning Division, LR 26:2563 (November 2000), LR 26:2767 (December 2000), LR 30:1171, 1188 (June 2004), amended by the Office of Environmental Assessment, LR 31:44 (January 2005), LR 31:1064 (May 2005), amended by the Office of the Secretary, Legal Affairs Division, LR 32:811 (May 2006), LR 32:1853 (October 2006).

§103. Exemptions

A. General Provision. The administrative authority may, upon written application therefor or upon his or her own initiative, grant such exemptions or exceptions from the requirements of these regulations as he or she determines are authorized by law and which will not result in undue hazard to public health and safety or property.

B. U.S. Department of Energy Contractors and U.S. Nuclear Regulatory Commission Contractors. Any U.S. Department of Energy contractor or subcontractor and any U.S. Nuclear Regulatory Commission contractor or subcontractor of the following categories operating within this state is exempt from these regulations to the extent that such contractor or subcontractor under his or her contract receives, possesses, uses, transfers, or acquires sources of radiation:

1. prime contractors performing work for the U.S. Department of Energy at U.S. government-owned or controlled sites, including the transportation of sources of radiation to or from such sites and the performance of contract services during temporary interruptions of such transportation;

2. prime contractors of the U.S. Department of Energy performing research in, or development, manufacture, storage, testing or transportation of, atomic weapons or components thereof;

3. prime contractors of the U.S. Department of Energy using or operating nuclear reactors or other nuclear devices in United States government-owned vehicle or vessel; and

4. any other prime contractor or subcontractor of the U.S. Department of Energy or of the U.S. Nuclear Regulatory Commission when the state and the U.S. Nuclear Regulatory Commission jointly determine:

a. that the exemption of the prime contractor or subcontractor is authorized by law; and

b. that under the terms of the contract or subcontract, there is adequate assurance that the work thereunder can be accomplished without undue risk to the public health and safety.

AUTHORITY NOTE: Promulgated in accordance with R.S. 30:2001 et seq.

HISTORICAL NOTE: Promulgated by the Department of Environmental Quality, Nuclear Energy Division, LR 13:569 (October 1987), amended by the Office of Air Quality and Radiation Protection, Radiation Protection Division, LR 18:34 (January 1992).

§104. Records

A. Each licensee and registrant shall maintain records showing the receipt, storage, transfer, and disposal of all sources of radiation.

B. Each licensee shall perform and maintain records of an annual inventory of all sealed sources. Records shall be maintained showing the sealed source identity, location, date of inventory, and name of individual(s) performing the inventory.

C. Each licensee and registrant shall maintain a current copy of an applicable license and/or registration certificate for nonlicensed sources of radiation at each temporary jobsite.

D. Each licensee and registrant shall maintain the records required by LAC 33:XV.104, 421, 451, and all other applicable portions of these regulations at the authorized location of storage and/or use.

E. Replacement of the original license or certificate of registration shall be provided at a cost of 10 percent of the annual fee. The registrant or licensee may reproduce the original document for his own use as necessary. Additional record requirements are specified elsewhere in these regulations.

AUTHORITY NOTE: Promulgated in accordance with R.S. 30:2001 et seq.

HISTORICAL NOTE: Promulgated by the Department of Environmental Quality, Nuclear Energy Division, LR 13:569 (October 1987), amended by the Office of Air Quality and Radiation Protection, Radiation Protection Division, LR 18:34 (January 1992), amended by the Office of Environmental Assessment, Environmental Planning Division, LR 30:1173 (June 2004).

§105. Inspections

A. Each licensee and registrant shall afford the department, at all reasonable times, opportunity to inspect sources of radiation and the premises and facilities wherein such sources of radiation are used or stored.

B. Each licensee and registrant shall make available to the department for inspection, upon reasonable notice, records maintained pursuant to these regulations.

AUTHORITY NOTE: Promulgated in accordance with R.S. 30:2001 et seq.

HISTORICAL NOTE: Promulgated by the Department of Environmental Quality, Nuclear Energy Division, LR 13:569 (October 1987), amended by the Office of Air Quality and Radiation Protection, Radiation Protection Division, LR 18:34 (January 1992), amended by the Office of Environmental Assessment, Environmental Planning Division, LR 26:2564 (November 2000).

§106. Tests

A. Each licensee and registrant shall perform, upon instructions from the department, or shall permit the department to perform, such reasonable tests as the department deems appropriate or necessary including, but not limited to, tests of:

1. sources of radiation;

2. facilities wherein sources of radiation are used or stored;

3. radiation detection and monitoring instruments; and

4. other equipment and devices used in connection with utilization or storage of licensed or registered sources of radiation.

AUTHORITY NOTE: Promulgated in accordance with R.S. 30:2001 et seq.

HISTORICAL NOTE: Promulgated by the Department of Environmental Quality, Nuclear Energy Division, LR 13:569 (October 1987), amended by the Office of Air Quality and Radiation Protection, Radiation Protection Division, LR 18:34 (January 1992), amended by the Office of Environmental Assessment, Environmental Planning Division, LR 26:2564 (November 2000).

§107. Additional Requirements

A. The administrative authority may, by rule, regulation, or order, impose upon any licensee or registrant such requirements in addition to those established in these regulations as deemed appropriate or necessary to minimize danger to public health and safety or property.

AUTHORITY NOTE: Promulgated in accordance with R.S. 30:2001 et seq.

HISTORICAL NOTE: Promulgated by the Department of Environmental Quality, Nuclear Energy Division, LR 13:569 (October 1987), amended by the Office of Air Quality and Radiation Protection, Radiation Protection Division, LR 18:34 (January 1992).

§108. Violations

A. Any person who violates any provision of the Louisiana Environmental Quality Act, or any regulation or condition(s) of license or certificate of registration issued thereunder will be subject to enforcement actions as provided in R.S. 30:2025.

AUTHORITY NOTE: Promulgated in accordance with R.S. 30:2001 et seq.

HISTORICAL NOTE: Promulgated by the Department of Environmental Quality, Nuclear Energy Division, LR 13:569 (October 1987), amended by the Office of Air Quality and Radiation Protection, Radiation Protection Division, LR 18:34 (January 1992).

§109. Impounding

A. Sources of radiation shall be subject to impounding pursuant to R.S. 30:2108.

AUTHORITY NOTE: Promulgated in accordance with R.S. 30:2001 et seq.

HISTORICAL NOTE: Promulgated by the Department of Environmental Quality, Nuclear Energy Division, LR 13:569 (October 1987), amended by the Office of Air Quality and Radiation Protection, Radiation Protection Division, LR 18:34 (January 1992).

§110. Prohibited Uses

A. Hand-held fluoroscopic screens shall not be used.

B. Shoe-fitting fluoroscopic devices shall not be used.

C. Sources of radiation shall not be used to expose any individual for training or demonstration purposes.

D. Sources of radiation shall not be used for the purpose of screening or inspecting individuals for concealed weapons, hazardous materials, stolen property, illegal goods, or contraband without prior written approval from the department.

E. No person shall intentionally apply or allow to be applied, either directly or indirectly, radiation to human beings except by, or under the supervision of, persons licensed by Louisiana to practice the healing arts and who are authorized to use radiation on humans.

1. *Supervision*, as used in this Subsection, shall mean the responsibility for, and control of, quality, radiation safety, and technical aspects of the application of radiation to human beings for diagnostic and therapeutic purposes.

2. This prohibition shall not be deemed to apply to persons who are exposed to radiation occupationally, or as otherwise provided in these regulations.

AUTHORITY NOTE: Promulgated in accordance with R.S. 30:2001 et seq.

HISTORICAL NOTE: Promulgated by the Department of Environmental Quality, Nuclear Energy Division, LR 13:569 (October 1987), amended by the Office of Air Quality and

Radiation Protection, Radiation Protection Division, LR 18:34 (January 1992), amended by the Office of Environmental Assessment, Environmental Planning Division, LR 26:2564 (November 2000), LR 30:1188 (June 2004).

§111. Interpretations

A. Except as specifically authorized by the department in writing, no interpretation of the meaning of these regulations by any officer or employee of the department will be recognized to be legally binding upon the department in any manner whatsoever.

AUTHORITY NOTE: Promulgated in accordance with R.S. 30:2001 et seq.
HISTORICAL NOTE: Promulgated by the Department of Environmental Quality, Nuclear Energy Division, LR 13:569 (October 1987), amended by the Office of Air Quality and Radiation Protection, Radiation Protection Division, LR 18:34 (January 1992), amended by the Office of Environmental Assessment, Environmental Planning Division, LR 26:2564 (November 2000).

§112. Rulemaking

A. The procedure that must be followed to petition for rulemaking can be found in LAC 33:I.Chapter 9.

AUTHORITY NOTE: Promulgated in accordance with R.S. 30:2001 et seq.
HISTORICAL NOTE: Promulgated by the Department of Environmental Quality, Nuclear Energy Division, LR 13:569 (October 1987), amended by the Office of Air Quality and Radiation Protection, Radiation Protection Division, LR 18:34 (January 1992), amended by the Office of the Secretary, LR 23:299 (March 1997).

§113. Appeal Procedure, Administrative Review

A. Any person affected by the regulatory actions of the department or administrative authority shall comply with R.S. 30:2024.

B. Applications to Request a Hearing

1. Any person who alleges that he or she has been aggrieved by the final actions or decision of the department or administrative authority may make application to the administrative authority, in writing, within 30 days after the occurrence of the alleged grievance or 30 days after the promulgation of any directive, order, decision or other written decision or declaration of the administrative authority.

2. Applications to the administrative authority requesting a hearing shall be in writing and shall state the following information:

a. name and address of the applicant;

b. nature of the grievance; and

c. names and addresses of any interested parties, that is, parties who have a direct interest in the subject matter for which an application is filed.

C. Notice of the Hearing

1. The applicant and all interested parties shall be mailed a notice of the hearing setting forth the date, place, time, nature of the hearing, statement of the legal authority, and jurisdiction under which the hearing is to be held; reference to the particular sections of the statutes and rules involved; and a statement of the matters asserted.

2. The notice of the hearing shall be published forthwith in the *Louisiana Register* and the official journal of the parish of the domicile of the applicant with the hearing date to be not less than 15 days after the date of the last publication.

D. The administrative authority either on his or her own motion, or at the suggestion to him or her by the applicant or any interested party, may call a conference of interested parties at any time prior to the hearing, if in his or her opinion such a conference would resolve or narrow the issues in controversy, or assist in the conducting of such a hearing.

E. An opportunity shall be afforded to all parties to respond and present evidence on all issues of fact involved and argument on all issues of law and policy involved and to conduct such direct or cross-examination as may be required for a full and true disclosure of the facts.

F. The hearing will be conducted in accordance with the rules and procedures set forth in R.S. 49:950 et seq., "Administrative Procedure Act."

AUTHORITY NOTE: Promulgated in accordance with R.S. 30:2001 et seq.
HISTORICAL NOTE: Promulgated by the Department of Environmental Quality, Nuclear Energy Division, LR 13:569 (October 1987), amended by the Office of Air Quality and Radiation Protection, Radiation Protection Division, LR 18:34 (January 1992), LR 19:1421 (November 1993), amended by the Office of Environmental Assessment, Environmental Planning Division, LR 26:2564 (November 2000), amended by the Office of Environmental Assessment, LR 31:44 (January 2005).

§114. Severability

A. Should any section, paragraph, sentence, clause, or phrase of these regulations be declared unconstitutional or invalid for any reason, the remainder of said regulations shall not be affected thereby, and shall remain in full force and effect.

AUTHORITY NOTE: Promulgated in accordance with R.S. 30:2001 et seq.
HISTORICAL NOTE: Promulgated by the Department of Environmental Quality, Nuclear Energy Division, LR 13:569 (October 1987), amended by the Office of Air Quality and Radiation Protection, Radiation Protection Division, LR 18:34 (January 1992).

§115. Communications

A. All communications and reports concerning these regulations, and applications filed thereunder, should be addressed to the department at its offices located in Baton Rouge, Louisiana.

AUTHORITY NOTE: Promulgated in accordance with R.S. 30:2001 et seq.
HISTORICAL NOTE: Promulgated by the Department of Environmental Quality, Nuclear Energy Division, LR 13:569 (October 1987), amended by the Office of Air Quality and

Radiation Protection, Radiation Protection Division, LR 18:34 (January 1992), amended by the Office of Environmental Assessment, Environmental Planning Division, LR 26:2564 (November 2000).

§116. Public Participation in Licensing Actions

A. In addition to other applicable requirements of these regulations, any application for a commercial radioactive waste disposal facility or for any facility involved with any phase of the nuclear fuel cycle must be processed in accordance with the following.

1. Filing of Application

a. A complete application as specified by the department and/or the administrative authority must be filed with appropriate fees, if required. Applications that lack necessary information for proper evaluation will be returned to the applicant within 60 days of receipt of application with a list of additional data required.

b. Applications that are deemed by the department to be complete will be accepted for review. The applicant will be notified of such acceptance for review within 60 days of receipt of the application.

2. Distribution of Application. Upon acceptance of an application for review, the assistant secretary will distribute copies of the application for review and comment to the administrative authority. A legal notice describing the application and describing where it may be reviewed will also be placed in a local newspaper.

3. Determination of Fact-Finding Hearing Necessity. Comments from the public and involved local, parish, and state agencies will be reviewed. Any person, within 20 days of date of publication of the legal notice specified in Paragraph A.2 of this Section, may request the administrative authority to call for a fact-finding hearing. The administrative authority will determine the necessity for a fact-finding hearing based on comments received and other available information. The request for the hearing must be in writing and shall contain the following information:

a. the name and affiliation, if any, of the person(s) making the request; and

b. comments in support of or objections to issuance of a license or permit.

4. Requirements for a Fact-Finding Hearing

a. If the administrative authority determines that a fact-finding hearing is warranted, such will be scheduled. All interested persons will be given written notice, and a legal notice announcing the fact-finding hearing will be placed in the local newspaper at least 20 days prior to the hearing. The notice shall contain the following information:

i. name of applicant;

ii. nature and location of activity;

iii. description and estimated quantities of waste handled or materials to be processed;

iv. date and location of fact-finding hearing;

v. the latest date written comments will be received for the fact-finding hearing;

vi. name and telephone number of person(s) to contact for additional information; and

vii. locations where the application may be reviewed.

b. Provisions governing fact-finding hearings contained in the Rules of Procedure of the department shall apply to all hearings conducted hereunder.

c. If the administrative authority determines that the objections presented, if any, do not raise genuine and pertinent issues necessitating a hearing, a written reply containing this determination will be sent to the person(s) requesting the hearing.

AUTHORITY NOTE: Promulgated in accordance with R.S. 30:2001 et seq.

HISTORICAL NOTE: Promulgated by the Department of Environmental Quality, Nuclear Energy Division, LR 13:569 (October 1987), amended by the Office of Air Quality and Radiation Protection, Radiation Protection Division, LR 18:34 (January 1992), amended by the Office of Environmental Assessment, Environmental Planning Division, LR 26:2565 (November 2000), LR 27:1225 (August 2001).

§199. Appendix A

Appendix A
Neutron Flux Dose Equivalents

Neutron Energy (MeV)	Number of Neutrons per Square Centimeter for a Dose Equivalent of 1 Rem (neutrons/cm^2) (10 millisieverts)	Average Flux Density to Deliver 100 millirem (1 millisievert) in 40 Hours (neutrons/cm^2 per second)
Thermal	970 x 10^6	670
0.0001	720 x 10^6	500
0.005	820 x 10^6	570
0.02	400 x 10^6	280
0.1	120 x 10^6	80
0.5	43 x 10^6	30
1.0	26 x 10^6	18
2.5	29 x 10^6	20
5.0	26 x 10^6	18
7.5	24 x 10^6	17
10.0	24 x 10^6	17
10 to 30	14 x 10^6	10

AUTHORITY NOTE: Promulgated in accordance with R. S. 30:2001 et seq.

HISTORICAL NOTE: Promulgated by the Department of Environmental Quality, Nuclear Energy Division, LR 13:569 (October 1987), amended by the Office of Air Quality and Radiation Protection, Radiation Protection Division, LR 18:34 (January 1992).

Chapter 2. Registration of Radiation Machines and Facilities

§201. Purpose and Scope

A. This Chapter provides for the registration of radiation machines and facilities and for the registration of persons

providing radiation machine installation, servicing, and/or services.

B. In addition to the requirements of this Chapter, all registrants are subject to the applicable provisions of LAC 33:XV.

AUTHORITY NOTE: Promulgated in accordance with R.S. 30:2001 et seq.
HISTORICAL NOTE: Promulgated by the Department of Environmental Quality, Nuclear Energy Division, LR 13:569 (October 1987), amended by the Office of Air Quality and Radiation Protection, Radiation Protection Division, LR 19:1421 (November 1993).

§202. Definition

A. For purposes of this Chapter the following definition applies.

Facility—the location at which one or more radiation devices or sources are installed and/or located within one building, vehicle, or under one roof and are under the same administrative control.

AUTHORITY NOTE: Promulgated in accordance with R.S. 30:2001 et seq.
HISTORICAL NOTE: Promulgated by the Department of Environmental Quality, Nuclear Energy Division, LR 13:569 (October 1987), amended by the Office of Air Quality and Radiation Protection, Radiation Protection Division, LR 19:1421 (November 1993).

§203. Exemptions

A. Electronic equipment that produces radiation incidental to its operation for other purposes is exempt from the registration and notification requirements of this Chapter, providing the dose equivalent rate, averaged over an area of 10 square centimeters, does not exceed 0.5 mRem (5μSv) per hour at 5.0 centimeters from any accessible surface of such equipment, as per 21 CFR 1020.10(c)(2). The production, testing, or factory servicing of such equipment shall not be exempt.

B. Radiation machines, while in transit or storage incident thereto, are exempt from the requirements of this Chapter.

C. Domestic television receivers, electron beam welders, computer monitors, domestic microwaves, and electron microscopes are exempt from the requirements of this Chapter.

AUTHORITY NOTE: Promulgated in accordance with R.S. 30:2001 et seq.
HISTORICAL NOTE: Promulgated by the Department of Environmental Quality, Nuclear Energy Division, LR 13:569 (October 1987), amended by the Office of Air Quality and Radiation Protection, Radiation Protection Division, LR 19:1421 (November 1993).

§204. Application for Registration of Radiation Machines and Facilities

A. Each person having a radiation machine or facility not presently registered shall do the following:

1. apply for registration of such facility and each radiation machine with the Office of Environmental Compliance, Emergency and Radiological Services Division, prior to the operation of a radiation machine facility. Application for registration shall be completed on Form DRC-6 furnished by the department upon request in writing and shall contain all the information required by the form and accompanying instructions. The registration of the first radiation producing machine at a facility constitutes registration of the facility itself;

2. designate on the application form an individual who shall be responsible for radiation protection; and

3. each registrant shall prohibit any person from furnishing radiation machine servicing or services as described in LAC 33:XV.205.A to his or her radiation machine facility until such person provides satisfactory evidence that he or she has been registered with the department as a provider of services in accordance with LAC 33:XV.205.

AUTHORITY NOTE: Promulgated in accordance with R.S. 30:2001 et seq.
HISTORICAL NOTE: Promulgated by the Department of Environmental Quality, Nuclear Energy Division, LR 13:569 (October 1987), amended by the Office of Air Quality and Radiation Protection, Radiation Protection Division, LR 19:1421 (November 1993), amended by the Office of Environmental Assessment, Environmental Planning Division, LR 26:2565 (November 2000), amended by the Office of the Secretary, Legal Affairs Division, LR 31:2523 (October 2005).

§205. Application for Registration of Servicing and Services

A. Each person who is engaged in the business of installing or offering to install radiation machines or is engaged in the business of furnishing or offering to furnish radiation machine servicing or services in this state shall apply for registration of such services with the Office of Environmental Compliance, Emergency and Radiological Services Division, within 30 days after the effective date of this Chapter or thereafter prior to furnishing or offering to furnish any such services.

B. Application for registration shall be completed on Form DRC-22 furnished by the Office of Environmental Compliance, Emergency and Radiological Services Division, upon request in writing and shall contain all information required by the form and accompanying instructions.

AUTHORITY NOTE: Promulgated in accordance with R.S. 30:2001 et seq.
HISTORICAL NOTE: Promulgated by the Department of Environmental Quality, Nuclear Energy Division, LR 13:569 (October 1987), amended by the Office of Air Quality and Radiation Protection, Radiation Protection Division, LR 19:1421 (November 1993), amended by the Office of Environmental Assessment, Environmental Planning Division, LR 26:2565 (November 2000), amended by the Office of the Secretary, Legal Affairs Division, LR 31:2523 (October 2005).

§206. Issuance of Registration Certificate

A. Upon a determination that an applicant meets the requirements of LAC 33:XV, the administrative authority shall issue a "Registration Certificate for Non-Licensed Sources of Radiation."

B. The department may incorporate in the registration certificate, at the time of the issuance or thereafter by appropriate rule, regulation, or order, such additional requirements, affirmative obligations, and conditions with respect to the registrant's receipt, possession, use, and transfer of sources of radiation as it deems appropriate or necessary.

AUTHORITY NOTE: Promulgated in accordance with R.S. 30:2001 et seq.

HISTORICAL NOTE: Promulgated by the Department of Environmental Quality, Nuclear Energy Division, LR 13:569 (October 1987), amended by the Office of Air Quality and Radiation Protection, Radiation Protection Division, LR 19:1421 (November 1993), amended by the Office of Environmental Assessment, Environmental Planning Division, LR 26:2565 (November 2000).

§207. Expiration of Registration Certificate

A. Except as provided by LAC 33:XV.208.B, each registration certificate shall expire at the end of 60 days after notification of expiration by the department.

AUTHORITY NOTE: Promulgated in accordance with R.S. 30:2001 et seq.

HISTORICAL NOTE: Promulgated by the Department of Environmental Quality, Nuclear Energy Division, LR 13:569 (October 1987), amended by the Office of Air Quality and Radiation Protection, Radiation Protection Division, LR 19:1421 (November 1993), amended by the Office of Environmental Assessment, Environmental Planning Division, LR 26:2565 (November 2000).

§208. Renewal of Registration Certificate

A. Application for renewal of registration shall be filed in accordance with LAC 33:XV.204.

B. In any case in which a registrant, not less than 30 days prior to the expiration of his or her existing registration certificate, has filed Form DRC-6 application in proper form for renewal, such existing registration certificate shall not expire until the application status has been finally determined by the department.

AUTHORITY NOTE: Promulgated in accordance with R.S. 30:2001 et seq.

HISTORICAL NOTE: Promulgated by the Department of Environmental Quality, Nuclear Energy Division, LR 13:569 (October 1987), amended by the Office of Air Quality and Radiation Protection, Radiation Protection Division, LR 19:1421 (November 1993), amended by the Office of Environmental Assessment, Environmental Planning Division, LR 26:2565 (November 2000).

§209. Report of Changes

A. The registrant shall notify the Office of Environmental Compliance, Emergency and Radiological Services Division, in writing before making any change that would render the information contained in the application for registration and/or registration certificate no longer accurate.

AUTHORITY NOTE: Promulgated in accordance with R.S. 30:2001 et seq.

HISTORICAL NOTE: Promulgated by the Department of Environmental Quality, Nuclear Energy Division, LR 13:569 (October 1987), amended by the Office of Air Quality and Radiation Protection, Radiation Protection Division, LR 19:1421 (November 1993), amended by the Office of Environmental Assessment, Environmental Planning Division, LR 26:2566 (November 2000), amended by the Office of the Secretary, Legal Affairs Division, LR 31:2523 (October 2005).

§210. Approval Not Implied

A. No person, in any advertisement, shall refer to the fact that a facility or machine is registered with the department pursuant to the provisions of LAC 33:XV.204, and no person shall state or imply that any activity under such registration has been approved by the department.

AUTHORITY NOTE: Promulgated in accordance with R.S. 30:2001 et seq.

HISTORICAL NOTE: Promulgated by the Department of Environmental Quality, Nuclear Energy Division, LR 13:569 (October 1987), amended by the Office of Air Quality and Radiation Protection, Radiation Protection Division, LR 19:1421 (November 1993), amended by the Office of Environmental Assessment, Environmental Planning Division, LR 26:2566 (November 2000).

§211. Assembler and/or Transferor Obligation

A. Any person who sells, leases, transfers, lends, disposes, assembles, or installs radiation machines in this state shall notify the Office of Environmental Compliance, Emergency and Radiological Services Division, at 15-day intervals of:

1. the name and address of persons who have received these machines;

2. the manufacturer, model, and serial number of each radiation machine transferred; and

3. the date of transfer of each radiation machine.

B. In the case of diagnostic X-ray systems that contain certified components, a copy of the assembler's report prepared in compliance with requirements of the Federal Diagnostic X-ray Standard (21 CFR 1020.30[d]) will suffice in lieu of quarterly reports.

C. No person shall make, sell, lease, transfer, lend, assemble, or install radiation machines or the supplies used in connection with such machines unless such supplies and equipment, when properly placed in operation and used, shall meet the requirements of LAC 33:XV.

AUTHORITY NOTE: Promulgated in accordance with R.S. 30:2001 et seq.

HISTORICAL NOTE: Promulgated by the Department of Environmental Quality, Nuclear Energy Division, LR 13:569 (October 1987), amended by the Office of Air Quality and Radiation Protection, Radiation Protection Division, LR 19:1421 (November 1993), amended by the Office of Environmental Assessment, Environmental Planning Division, LR 26:2566

(November 2000), amended by the Office of the Secretary, Legal Affairs Division, LR 31:2523 (October 2005).

§212. Reciprocal Recognition of Out-of-State Radiation Machines

A. Temporary Use. Whenever any radiation machine is to be brought into Louisiana for any temporary use:

1. the person proposing to bring such machine into the state shall give written notice to the Office of Environmental Compliance, Emergency and Radiological Services Division, at least three working days before such machine is to be used in the state. Additional requirements for work involving industrial radiography at temporary job sites may be found in LAC 33:XV.Chapter 5. The notice shall include:

a. the type of radiation machine;

b. the nature, duration, and scope of use; and

c. the exact location(s) where the radiation machine is to be used;

2. if, for a specific case, the three-working-day period would impose an undue hardship on the person, upon written application to the Office of Environmental Compliance, Emergency and Radiological Services Division, permission to proceed sooner may be granted.

B. The person referred to in LAC 33:XV.212.A shall:

1. comply with the Louisiana Radiation Regulations; and

2. supply the department with such other information as the department may reasonably request.

AUTHORITY NOTE: Promulgated in accordance with R.S. 30:2001 et seq.

HISTORICAL NOTE: Promulgated by the Department of Environmental Quality, Nuclear Energy Division, LR 13:569 (October 1987), amended by the Office of Air Quality and Radiation Protection, Radiation Protection Division, LR 19:1421 (November 1993), amended by the Office of Environmental Assessment, Environmental Planning Division, LR 26:2566 (November 2000), LR 29:1815 (September 2003), amended by the Office of the Secretary, Legal Affairs Division, LR 31:2523 (October 2005).

§213. Modification, Revocation, and Termination of Registration Certificate

A. The terms and conditions of any registration certificate shall be subject to amendment, revision, or modification, or the registration certificate may be suspended or revoked by reason of amendments to the act or by reason of rules, regulations, and orders issued by the administrative authority.

B. Any registration certificate may be revoked, suspended, or modified, in whole or in part, for any material false statement in the application or any statement of fact required under provisions of the act or because of conditions revealed by such application or statement of fact or any report, record, or inspection or other means that would warrant the administrative authority to refuse to grant a registration certificate on an original application, or for violation of, or failure to observe any of, the terms and conditions of the act or of the registration certificate or of any rule, regulation, or order of the administrative authority, including failure to pay assessed fees. Whether a false statement is material shall be determined by the administrative authority.

C. Except in cases of willfulness or those in which the public welfare, interest, or safety requires otherwise, no registration certificate shall be modified, suspended, or revoked unless, prior to the institution of proceedings thereof, facts or conduct that may warrant such action shall have been called to the attention of the registrant in writing, and the registrant shall have been accorded an opportunity to demonstrate or achieve compliance with all lawful requirements.

D. The department will terminate a registration certificate upon written request by the registrant, provided the registrant no longer possesses the registered device or provided the registrant has rendered the unit permanently incapable of producing radiation. The registrant shall notify the Office of Environmental Compliance, Emergency and Radiological Services Division, within 60 days of the final disposition of the X-ray machine.

AUTHORITY NOTE: Promulgated in accordance with R.S. 30:2001 et seq.

HISTORICAL NOTE: Promulgated by the Department of Environmental Quality, Office of Air Quality and Radiation Protection, Radiation Protection Division, LR 19:1421 (November 1993), amended by the Office of Environmental Assessment, Environmental Planning Division, LR 26:2566 (November 2000), amended by the Office of the Secretary, Legal Affairs Division, LR 31:2524 (October 2005).

Chapter 3. Licensing of Radioactive Material

§301. Purpose and Scope

A. This Chapter and Chapters 7, 13, and 15 provide for the licensing of radioactive material. No person shall receive, possess, use, transfer, own, or acquire radioactive material except as authorized in a specific or general license issued pursuant to this Chapter or as otherwise provided in these regulations.

B. In addition to the requirements of this Chapter, all licenses are subject to the requirements of Chapters 1, 4, 10, and 15. Licensees engaged in industrial radiographic operations are subject to the requirements of Chapter 5 and licensees using radionuclides in the healing arts are subject to the requirements of Chapter 7. Licensees with analytical X-ray equipment or particle accelerators may also be subject to the requirements of Chapters 8 and 9, respectively, and licensees engaged in wireline and subsurface tracer studies are subject to the requirements of Chapter 20. Licensees engaged with Naturally Occurring Radioactive Materials (NORM) may also be subject to the requirements of Chapter 14.

AUTHORITY NOTE: Promulgated in accordance with R.S. 30:2001 et seq.

HISTORICAL NOTE: Promulgated by the Department of Environmental Quality, Nuclear Energy Division, LR 13:569 (October 1987), amended by the Office of Air Quality and Radiation Protection, Radiation Protection Division, LR 18:34 (January 1992).

§302. Deliberate Misconduct

A. Any licensee, certificate of registration holder, applicant for a license or certificate of registration, employee of a licensee, certificate of registration holder, or applicant; or any contractor (including a supplier or consultant), subcontractor, employee of a contractor or subcontractor of any licensee or certificate of registration holder or applicant for a license or certificate of registration, who knowingly provides to any licensee, applicant, certificate holder, contractor, or subcontractor, any components, equipment, materials, or other goods or services that relate to a licensee's, certificate holder's, or applicant's activities in this Section, may not:

1. engage in deliberate misconduct that causes or would have caused, if not detected, a licensee, certificate of registration holder, or applicant to be in violation of any rule, regulation, or order; or any term, condition, or limitation of any license issued by the department; or

2. deliberately submit to the department, a licensee, a certificate of registration holder, an applicant, or a licensee's, certificate holder's, or applicant's contractor or subcontractor, information that the person submitting the information knows to be incomplete or inaccurate in some respect.

B. A person who violates Subsection A of this Section may be subject to enforcement action in accordance with the procedures in LAC 33:XV.108.

C. For the purposes of Paragraph A.1 of this Section, deliberate misconduct by a person means an intentional act or omission that the person knows:

1. would cause a licensee, certificate of registration holder, or applicant to be in violation of any rule, regulation, or order; or any term, condition, or limitation, of any license issued by the department; or

2. constitutes a violation of a requirement, procedure, instruction, contract, purchase order, or policy of a licensee, certificate of registration holder, applicant, contractor, or subcontractor.

AUTHORITY NOTE: Promulgated in accordance with R.S. 30:2104 et seq.

HISTORICAL NOTE: Promulgated by the Department of Environmental Quality, Office of Environmental Assessment, Environmental Planning Division, LR 26:2767 (December 2000).

Subchapter A. Exemptions

§303. Source Material

A. Any person is exempt from these regulations to the extent that such person receives, possesses, uses, owns, or transfers source material in any chemical mixture, compound, solution, or alloy in which the source material is, by weight, less than 0.05 percent of the mixture, compound, solution, or alloy.

B. Any person is exempt from this Chapter to the extent that such person receives, possesses, uses, or transfers unrefined and unprocessed ore containing source material, provided that, except as authorized in a specific license, such person shall not refine or process such ore.

C. Any person is exempt from this Chapter to the extent that such person receives, possesses, uses, or transfers the following.

1. Any quantities of thorium contained in:

a. incandescent gas mantles;

b. vacuum tubes;

c. welding rods;

d. electric lamps for illuminating purposes, provided that no lamp contains more than 50 milligrams of thorium;

e. germicidal lamps, sunlamps, and lamps for outdoor or industrial lighting, provided that no lamp contains more than 2 grams of thorium;

f. rare earth metals and compounds, mixtures, and products containing not more than 0.25 percent by weight of thorium, uranium, or any combination of these; or

g. personnel neutron dosimeters, provided that each dosimeter does not contain more than 50 milligrams of thorium.

2. Source material contained in the following products:

a. glazed ceramic tableware, provided that the glaze contains not more than 20 percent by weight source material;

b. glassware containing not more than 10 percent by weight source material, but not including commercially manufactured glass brick, pane glass, ceramic glass, ceramic tile, or other glass or ceramic used in construction;

c. glass enamel or glass enamel frit containing not more than 10 percent by weight source material imported or ordered for importation into the United States, or initially distributed by manufacturers in the United States, before July 25, 1983; or

d. piezoelectric ceramic containing not more than 2 percent by weight source material.

3. Photographic film, negatives, and prints containing uranium or thorium.

4. Any finished product or part fabricated of, or containing, tungsten-thorium or magnesium-thorium alloys, provided that the thorium content of the alloy does not exceed 4 percent by weight and that the exemption contained in this Subsection shall not be deemed to authorize the chemical, physical, or metallurgical treatment or processing of any such product or part.

5. Uranium contained in counterweights installed in aircraft, rockets, projectiles, and missiles or stored or handled in connection with installation or removal of such counterweights, provided that:

a. the counterweights are manufactured in accordance with a specific license issued by the U.S. Nuclear Regulatory Commission authorizing distribution by the licensee pursuant to 10 CFR 40;

b. each counterweight has been impressed with the following legend, clearly legible through any plating or other covering: "DEPLETED URANIUM";

c. each counterweight is durably and legibly labeled or marked with the identification of the manufacturer and the statement: "UNAUTHORIZED ALTERATIONS PROHIBITED"; and

d. the exemption contained in this Subsection shall not be deemed to authorize the chemical, physical, or metallurgical treatment or processing of any such counterweights other than repair or restoration of any plating or other covering.

e. the requirements specified in LAC 33:XV.303.C.5.b and c need not be met by counterweights manufactured prior to December 31, 1969, provided that such counterweights are impressed with the legend, "CAUTION - RADIOACTIVE MATERIAL - URANIUM," as previously required by the regulations.

6. Uranium or depleted uranium metal used as shielding constituting part of any shipping container, provided that:

a. the shipping container is conspicuously and legibly impressed with the legend "CAUTION - RADIOACTIVE SHIELDING - URANIUM"; and

b. the uranium metal is encased in mild steel or equally fire-resistant metal of minimum wall thickness of 1/8 inch (3.2 mm).

7. Thorium contained in finished optical lenses, provided that each lens does not contain more than 30 percent by weight of thorium, and that the exemption contained in this Subsection shall not be deemed to authorize either:

a. the shaping, grinding, or polishing of such lens or manufacturing processes other than the assembly of such lens into optical systems and devices without any alteration of the lens; or

b. the receipt, possession, use, or transfer of thorium contained in contact lenses, or in spectacles, or in eyepieces in binoculars or other optical instruments.

8. Uranium contained in detector heads for use in fire detection units, provided that each detector head contains not more than 0.005 microcurie of uranium.

9. Thorium contained in any finished aircraft engine part containing nickel-thoria alloy, provided that:

a. the thorium is dispersed in the nickel-thoria alloy in the form of finely divided thoria (thorium dioxide); and

b. the thorium content in the nickel-thoria alloy does not exceed 4 percent by weight.

D. The exemptions in LAC 33:XV.303.C do not authorize the manufacture of any of the products described.

AUTHORITY NOTE: Promulgated in accordance with R.S. 30:2001 et seq.

HISTORICAL NOTE: Promulgated by the Department of Environmental Quality, Nuclear Energy Division, LR 13:569 (October 1987), amended by the Office of Air Quality and Radiation Protection, Radiation Protection Division, LR 18:34 (January 1992), amended by the Office of Environmental Assessment, Environmental Planning Division, LR 27:1226 (August 2001).

§304. Radioactive Material Other Than Source Material

A. Exempt Concentrations

1. Except as provided in Paragraph A.2 of this Section, any person is exempt from this Chapter to the extent that such person receives, possesses, uses, transfers, owns, or acquires products or materials containing radioactive material in concentrations not in excess of those listed in Schedule A of this Chapter.

2. No person may introduce radioactive material into a product or material, knowing or having reason to believe that it will be transferred to persons exempt under LAC 33:XV.304.A.1 or equivalent regulations of the U.S. Nuclear Regulatory Commission or any agreement state or licensing state, except in accordance with a specific license issued pursuant to LAC 33:XV.328.A or the general licenses provided in LAC 33:XV.390.

B. Exempt Quantities

1. Except as provided in Paragraphs B.3 and 4 of this Section, any person is exempt from these regulations to the extent that such person receives, possesses, uses, transfers, owns, or acquires radioactive material in individual quantities, none of which exceeds the applicable quantity set forth in Schedule B of this Chapter.

2. Any person who possesses radioactive material received or acquired under the general license, formerly provided in Section B.22, is exempt from the requirements for a license set forth in this Chapter to the extent that such person possesses, uses, transfers, or owns such radioactive material. This exemption does not apply for radium-226.

3. LAC 33:XV.304.B does not authorize the production, packaging, or repackaging of radioactive material for purposes of commercial distribution or the incorporation of radioactive material into products intended for commercial distribution.

4. No person may, for purposes of commercial distribution, transfer radioactive material in excess of the individual quantities set forth in Schedule B of this Chapter knowing, or having reason to believe, that such quantities of radioactive material will be transferred to persons exempt under Subsection B of this Section or equivalent regulations of the U.S. Nuclear Regulatory Commission or any other

agreement state, except in accordance with a specific license issued by the U.S. Nuclear Regulatory Commission in accordance with 10 CFR 32.18 or by the administrative authority in accordance with LAC 33:XV.328.B, which license states that the radioactive material may be transferred by the licensee to persons exempt under Subsection B of this Section or the equivalent regulations of the U.S. Nuclear Regulatory Commission, or any other agreement state or licensing state. Authority to transfer possession or control by the manufacturer, processor, or producer of any equipment, device, commodity, or other product containing byproduct material whose subsequent possession, use, transfer, and disposal by all other persons are exempted from regulatory requirements may be obtained only from the U.S. Nuclear Regulatory Commission, Washington, D.C. 20555.

C. Exempt Items

1. Certain Items Containing Radioactive Material. Authority to transfer possession or control by the manufacturer, processor, or producer of any equipment, device, commodity, or other product containing byproduct material whose subsequent possession, use, transfer, and disposal by all other persons are exempted from regulatory requirements may be obtained only from the U.S. Nuclear Regulatory Commission, Washington, D.C. 20555. Except for persons who apply radioactive material to, or persons who incorporate radioactive material into, the following products, any person is exempt from these regulations to the extent that he or she receives, possesses, uses, transfers, owns, or acquires the following products.

a. Timepieces or hands or dials containing not more than the following specified quantities of radioactive material and not exceeding the following specified radiation dose rate:

i. 25 millicuries (925 MBq) of tritium per timepiece;

ii. 5 millicuries (185 MBq) of tritium per hand;

iii. 15 millicuries (555 MBq) of tritium per dial (bezels when used shall be considered as part of the dial);

iv. 100 microcuries (3.7 MBq) of promethium-147 per watch or 200 microcuries (7.4 MBq) of promethium-147 per any other timepiece;

v. 20 microcuries (0.74 MBq) of promethium-147 per watch hand or 40 microcuries (1.48 MBq) of promethium-147 per other timepiece hand;

vi. 60 microcuries (2.22 MBq) of promethium-147 per watch dial or 120 microcuries (4.44 MBq) of promethium-147 per other timepiece dial (bezels when used shall be considered as part of the dial);

vii. the radiation dose rate from hands and dials containing promethium-147 will not exceed, when measured through 50 milligrams per square centimeter of absorber:

(a). for wrist watches, 0.1 millirad (1 μGy) per hour at 10 centimeters from any surface;

(b). for pocket watches, 0.1 millirad (1 μGy) per hour at 1 centimeter from any surface; and

(c). for any other timepiece, 0.2 millirad (2 μGy) per hour at 10 centimeters from any surface;

viii. 1 microcurie (37 kBq) of radium-226 per timepiece in timepieces acquired prior to April 20, 1977.

b. Lock illuminators containing not more than 15 millicuries of tritium or not more than 2 millicuries of promethium-147 shall not exceed 1 millirad per hour at 1 centimeter from any surface when measured through 50 milligrams per square centimeter of absorber.

c. Precision balances containing not more than 1 millicurie of tritium per balance or not more than 0.5 millicurie of tritium per balance part.

d. Automobile shift quadrants containing not more than 25 millicuries of tritium.

e. Marine compasses containing not more than 750 millicuries of tritium gas and other marine navigational instruments containing not more than 250 millicuries of tritium gas.

f. Thermostat dials and pointers containing not more than 25 millicuries of tritium per thermostat.

g. Electron tubes, provided that no tube contains more than one of the following specified quantities of radioactive material:

i. 150 millicuries of tritium per microwave receiver protector tube or 10 millicuries of tritium per any other electron tube;

ii. 1 microcurie of cobalt-60;

iii. 5 microcuries of nickel-63;

iv. 30 microcuries of krypton-85;

v. 5 microcuries of cesium-137;

vi. 30 microcuries of promethium-147; and

vii. provided further, that the levels of radiation from each electron tube containing radioactive material do not exceed 1 millirad per hour at 1 centimeter from any surface when measured through 7 milligrams per square centimeter of absorber; and

viii. for purposes of this Subsection, *electron tubes* include spark gap tubes, power tubes, gas tubes including glow lamps, receiving tubes, microwave tubes, indicator tubes, pick-up tubes, radiation detection tubes, and any other completely sealed tube that is designed to conduct or control electrical currents.

h. Ionizing radiation measuring instruments containing, for the purposes of internal calibration or standardization, one or more sources of radioactive material, provided that:

i. each source contains no more than one exempt quantity set forth in Schedule B of this Chapter;

ii. each instrument contains no more than 10 exempt quantities. For purposes of this requirement, an instrument's source(s) may contain either one or different types of radionuclides, and an individual exempt quantity may be composed of fractional parts of one or more of the exempt quantities in Schedule B of this Chapter, provided that the sum of such fractions shall not exceed unity; and

iii. for purposes of this Section, 0.05 microcurie of americium-241 is considered an exempt quantity under Schedule B of this Chapter.

2. Self-Luminous Products Containing Radioactive Material

a. Tritium, Krypton-85, or Promethium-147. Except for persons who manufacture, process, or produce self-luminous products containing tritium, krypton-85, or promethium-147, any person is exempt from these regulations to the extent that such person receives, possesses, uses, transfers, owns, or acquires tritium, krypton-85, or promethium-147 in self-luminous products manufactured, processed, produced, imported, or transferred in accordance with a specific license issued by the U.S. Nuclear Regulatory Commission pursuant to 10 CFR 32.22, which license authorizes the transfer of the product to persons who are exempt from regulatory requirements. The exemption in this Subsection does not apply to tritium, krypton-85, or promethium-147 used in products primarily for frivolous purposes or in toys or adornments.

b. Radium-226. Any person is exempt from these regulations to the extent that such person receives, possesses, uses, transfers, or owns articles containing less than 0.1 microcurie of radium-226 that were acquired prior to April 20, 1977.

3. Gas and Aerosol Detectors Containing Radioactive Material

a. Except for persons who manufacture, process, or produce gas and aerosol detectors containing radioactive material, any person is exempt from these regulations to the extent that such person receives, possesses, uses, transfers, owns, or acquires radioactive material in gas and aerosol detectors designed to protect life or property from fires and airborne hazards, provided that detectors containing radioactive material shall have been manufactured, imported, or transferred in accordance with a specific license issued by the administrative authority, or any other agreement state, the U.S. Nuclear Regulatory Commission, or any licensing state pursuant to 10 CFR 32.36, or equivalent (e.g., LAC 33:XV.328.C, which authorizes the transfer of the detectors to persons who are exempt from regulatory requirements). Authority to transfer possession or control by the manufacturer, processor, or producer of any equipment, device, commodity, or other product containing byproduct material whose subsequent possession, use, transfer, and disposal by all other persons are exempted from regulatory requirements may be obtained only from the U.S. Nuclear Regulatory Commission, Washington, D.C. 20555.

b. Gas and aerosol detectors previously manufactured and distributed to general licensees in accordance with a specific license issued by an agreement state shall be considered exempt under LAC 33:XV.304.C.3.a, provided that the device is labeled in accordance with the specific license authorizing distribution of devices to persons generally licensed, and provided further that they meet the requirements of LAC 33:XV.328.C.

c. Gas and aerosol detectors containing NARM previously manufactured and distributed in accordance with a specific license issued by a licensing state shall be considered exempt under LAC 33:XV.304.C.3.a, provided that the device is labeled in accordance with the specific license authorizing distribution, and provided further that the device meets the requirements of LAC 33:XV.328.C.

4. Resins Containing Scandium-46, Designed for Sand Consolidation in Oil Wells. Any person is exempt from these regulations to the extent that such person receives, possesses, uses, transfers, owns, or acquires synthetic plastic resins containing scandium-46 that are designed for sand consolidation in oil wells. Such resins shall have been manufactured or imported in accordance with a specific license issued by the U.S. Nuclear Regulatory Commission, or shall have been manufactured in accordance with the specifications contained in a specific license issued by the administrative authority or any other agreement state to the manufacturer of such resins pursuant to licensing requirements equivalent to those contained in 10 CFR 32.16 and 32.17. This exemption does not authorize the manufacture of any resins containing scandium-46.

5. Capsules Containing Carbon-14 Urea for “In Vivo” Diagnostic Use for Humans

a. Except as provided in Subparagraphs C.5.b and c of this Section, any person is exempt from the requirements for a license set forth in these regulations provided that such person receives, possesses, uses, transfers, owns, or acquires capsules containing 37 kBq (1μCi) carbon-14 urea each (allowing for nominal variation that may occur during the manufacturing process), for “in vivo” diagnostic use for humans.

b. Any person who desires to use the capsules for research involving human subjects shall apply for and receive a specific license in accordance with LAC 33:XV.Chapters 3 and 7.

c. Any person who desires to manufacture, prepare, process, produce, package, repackage, or transfer for commercial distribution such capsules shall apply for and receive a specific license in accordance with LAC 33:XV.328.K.

d. Nothing in this Section relieves persons from complying with applicable FDA, other federal, and state requirements governing receipt, administration, and use of drugs.

AUTHORITY NOTE: Promulgated in accordance with R.S. 30:2001 et seq.

HISTORICAL NOTE: Promulgated by the Department of Environmental Quality, Nuclear Energy Division, LR 13:569 (October 1987), amended by the Office of Air Quality and Radiation Protection, Radiation Protection Division, LR 18:34 (January 1992), LR 24:2091 (November 1998), amended by the Office of Environmental Assessment, Environmental Planning Division, LR 27:1226 (August 2001).

Subchapter B. Licenses

§320. Types of Licenses

A. Licenses for radioactive materials are of two types: general and specific.

1. General licenses provided in this Chapter are effective without the filing of application with the Office of Environmental Compliance, Emergency and Radiological Services Division, or the issuance of licensing documents to the particular persons, although the filing of certain information with the Office of Environmental Compliance, Emergency and Radiological Services Division, may be required by the particular general license. The general licensee is subject to all other applicable portions of these regulations and to any limitations of the general license.

2. Specific licenses require the submission of an application to the Office of Environmental Compliance, Emergency and Radiological Services Division, and the issuance of a licensing document by the administrative authority. The licensee is subject to all applicable portions of these regulations as well as to any limitations specified in the licensing document. The licensee shall notify the Office of Environmental Compliance, Emergency and Radiological Services Division, in writing before making any change that would render the information contained in the application for license no longer accurate.

AUTHORITY NOTE: Promulgated in accordance with R.S. 30:2001 et seq.

HISTORICAL NOTE: Promulgated by the Department of Environmental Quality, Nuclear Energy Division, LR 13:569 (October 1987), amended by the Office of Air Quality and Radiation Protection, Radiation Protection Division, LR 18:34 (January 1992), amended by the Office of Environmental Assessment, Environmental Planning Division, LR 26:2566 (November 2000), LR 29:1816 (September 2003), amended by the Office of the Secretary, Legal Affairs Division, LR 31:2524 (October 2005).

Subchapter C. General Licenses

§321. General Licenses: Source Material

A. A general license is hereby issued authorizing use and transfer of not more than 15 pounds (6.8 kilograms) of source material at any one time by commercial and industrial firms, and research, educational, and medical institutions for research, development, educational, operational, or commercial purposes; and provided further that no such person shall, pursuant to this general license, receive more than a total of 150 pounds of source material in any one calendar year.

B. Persons who receive, possess, use, or transfer source material pursuant to the general license issued in LAC 33:XV.321.A are exempt from the provisions of Chapters 4 and 10 of these regulations to the extent that such receipt, possession, use, or transfer is within the terms of such general license, provided, however, that this exemption shall not be deemed to apply to any such person who is also in possession of source material under a specific license issued pursuant to this Chapter.

C. Persons who receive, possess, use, or transfer source material pursuant to the general license in LAC 33:XV.32l.A.1 are prohibited from administering source material or the radiation therefrom, either externally or internally, to human beings except as may be authorized by the department in a specific license.

D. A general license is hereby issued authorizing the receipt of title to source material without regard to quantity. This general license does not authorize any person to receive, possess, use, or transfer source material.

E. Depleted Uranium in Industrial Products and Devices

1. A general license is hereby issued to receive, acquire, possess, use, or transfer, in accordance with the provisions of LAC 33:XV.321.E.2, 3, 4, and 5, depleted uranium contained in industrial products or devices for the purpose of providing a concentrated mass in a small volume of the product or device.

2. The general license in LAC 33:XV.321.E.1 applies only to industrial products or devices that have been manufactured either in accordance with a specific license issued to the manufacturer of the products or devices pursuant to LAC 33:XV.328.M or in accordance with a specific license issued to the manufacturer by the U.S. Nuclear Regulatory Commission or an agreement state that authorizes manufacture of the products or devices for distribution to persons generally licensed by the U.S. Nuclear Regulatory Commission or an agreement state.

3. Depleted Uranium

a. Persons who receive, acquire, possess, or use depleted uranium pursuant to the general license established by Paragraph E.1 of this Section shall file Form DRC-21, "General License Certificate—Use of Depleted Uranium Under General License," with the Office of Environmental Compliance, Emergency and Radiological Services Division. Form DRC-21 will be furnished by the Office of Environmental Compliance, Emergency and Radiological Services Division, upon written request. The form shall be submitted within 30 days after the first receipt or acquisition of such depleted uranium. The general licensee shall furnish on Form DRC-2l the following information and such other information as may be required by that form:

i. name and address of the general licensee;

ii. a statement that the general licensee has developed and will maintain procedures designed to establish physical control over the depleted uranium described in LAC 33:XV.321.E.1 and designed to prevent transfer of such depleted uranium in any form, including

metal scrap, to persons not authorized to receive the depleted uranium; and

iii. name and/or title, address, and telephone number of the individual duly authorized to act for and on behalf of the general licensee in supervising the procedures identified in LAC 33:XV.321.E.3.a.ii.

b. The licensee possessing or using depleted uranium under the general license established by Paragraph E.1 of this Section shall report in writing to the Office of Environmental Compliance, Emergency and Radiological Services Division, any changes in information furnished by him in Form DRC-21, "General License Certificate—Use of Depleted Uranium Under General License." The report shall be submitted within 30 days after the effective date of such change.

4. A person who receives, acquires, possesses, or uses depleted uranium pursuant to the general license established by LAC 33:XV.321.E.1:

a. shall not introduce such depleted uranium, in any form, into a chemical, physical, or metallurgical treatment or process, except a treatment or process for repair or restoration of any plating or other covering of the depleted uranium;

b. shall not abandon such depleted uranium;

c. shall transfer or dispose of such depleted uranium only by transfer in accordance with the provisions of LAC 33:XV.340. In the case where the transferee receives the depleted uranium pursuant to the general license established by LAC 33:XV.321.E.1, the transferor shall furnish the transferee a copy of this regulation and a copy of Form DRC-2l. In the case where the transferee receives the depleted uranium pursuant to a general license contained in the U.S. Nuclear Regulatory Commission's or agreement state's regulation equivalent to LAC 33:XV.321.E.1, the transferor shall furnish the transferee a copy of this regulation and a copy of FORM DRC-21 accompanied by a note explaining that use of the product or device is regulated by the U.S. Nuclear Regulatory Commission or agreement state under requirements substantially the same as those in this regulation;

d. within 30 days of any transfer, shall report in writing to the Office of Environmental Compliance, Emergency and Radiological Services Division, the name and address of the person receiving the depleted uranium pursuant to such transfer; and

e. shall not export such depleted uranium except in accordance with a license issued by the U.S. Nuclear Regulatory Commission pursuant to 10 CFR 110.

5. Any person receiving, acquiring, possessing, using, or transferring depleted uranium pursuant to the general license established by LAC 33:XV.321.E.1 is exempt from the requirements of Chapters 4 and 10 of these regulations with respect to the depleted uranium covered by that general license.

AUTHORITY NOTE: Promulgated in accordance with R.S. 30:2001 et seq.

HISTORICAL NOTE: Promulgated by the Department of Environmental Quality, Nuclear Energy Division, LR 13:569 (October 1987), amended by the Office of Air Quality and Radiation Protection, Radiation Protection Division, LR 18:34 (January 1992), amended by the Office of Environmental Assessment, Environmental Planning Division, LR 26:2567 (November 2000), amended by the Office of the Secretary, Legal Affairs Division, LR 31:2524 (October 2005).

§322. General Licenses: Radioactive Material Other Than Source Material

A. Certain Devices and Equipment. A general license is hereby issued to transfer, receive, acquire, own, possess, and use radioactive material incorporated in the following devices or equipment that have been manufactured, tested, and labeled by the manufacturer in accordance with a specific license issued to the manufacturer by the U.S. Nuclear Regulatory Commission for use pursuant to 10 CFR 31.3. Attention is directed particularly to the provisions of 10 CFR 20 concerning labeling of containers. This general license is subject to the provisions of LAC 33:XV.104-109, 304.A.2, 331, 340, 350, and Chapters 4, 10, and 15 of these regulations.

1. Static Elimination Devices. This includes devices designed for use as static eliminators that contain, as a sealed source or sources, radioactive material consisting of a total of not more than 500 microcuries of polonium-210 per device.

2. Ion-Generating Tubes. This includes devices designed for ionization of air that contain, as a sealed source or sources, radioactive material consisting of a total of not more than 500 microcuries of polonium-210 per device or a total of not more than 50 millicuries of hydrogen-3 (tritium) per device.

B. Reserved.

C. Reserved.

D. Certain Measuring, Gauging, and Controlling Devices

1. A general license is hereby issued to commercial and industrial firms and to research, educational, and medical institutions, individuals in the conduct of their business, and state or local government agencies to own, receive, acquire, possess, use, or transfer in accordance with the provisions of LAC 33:XV.322.D.2 radioactive material, excluding special nuclear material, contained in devices designed and manufactured for the purpose of detecting, measuring, gauging, or controlling thickness, density, level, interface location, radiation, leakage, or quantitative chemical composition, or for producing light or an ionized atmosphere.

2. The general license in LAC 33:XV.322.D.1 applies only to radioactive material contained in devices that have been manufactured and labeled in accordance with the specifications contained in a specific license issued by the administrative authority pursuant to LAC 33:XV.328.D or in accordance with the specifications contained in a specific

license issued by the U.S. Nuclear Regulatory Commission, any other agreement state, or a licensing state that authorizes distribution of devices to persons generally licensed by the U.S. Nuclear Regulatory Commission, an agreement state, or a licensing state. Regulations under the Federal Food, Drug, and Cosmetic Act authorizing the use of radioactive control devices in food production require certain additional labeling thereon that is found in 21 CFR 179.21.

3. Any person who owns, receives, acquires, possesses, uses, or transfers radioactive material in a device pursuant to the general license in LAC 33:XV.322.D.1 shall do the following:

a. assure that all labels affixed to the device at the time of receipt, and bearing a statement that removal of the label is prohibited, are maintained thereon and shall comply with all instructions and precautions provided by such labels;

b. assure that the device is tested for leakage of radioactive material and proper operation of the on-off mechanism and indicator, if any, at no longer than six-month intervals or at such other intervals as are specified in the label, however:

i. devices containing only krypton need not be tested for leakage of radioactive material; and

ii. devices containing only tritium or not more than 100 microcuries of other beta- and/or gamma-emitting material or 10 microcuries of alpha-emitting material and devices held in storage in the original shipping container prior to initial installation need not be tested for any purpose;

c. assure that the tests required by LAC 33:XV.322.D.3.b and other testing, installation, servicing, and removal from installation involving the radioactive material, its shielding, or containment are performed:

i. in accordance with the instructions provided by the labels; or

ii. by a person holding an applicable specific license from the administrative authority, the U.S. Nuclear Regulatory Commission, any other agreement state, or a licensing state to perform such activities;

d. maintain records showing compliance with the requirements of Subparagraphs D.3.b and c of this Section. The records shall show the results of tests. The records also shall show the dates of performance of, and the names of persons performing, testing, installation, servicing, and removal from installation of the radioactive material, its shielding, or containment. Records of tests for leakage of radioactive material required by Subparagraph D.3.b of this Section shall be maintained until the sealed source is transferred or disposed. Records of tests of the on-off mechanism and indicator required by Subparagraph D.3.b of this Section shall be maintained for one year after the next required test of the on-off mechanism and indicator is performed or until the sealed source is transferred or disposed. Records required by Subparagraph D.3.c of this Section shall be maintained for a period of three years from the date of the recorded event or until the device is transferred or disposed;

e. upon the occurrence of a failure of or damage to, or any indication of a possible failure of or damage to, the shielding of the radioactive material or the on-off mechanism or indicator, or upon the detection of 0.005 microcurie or more of removable radioactive material, immediately suspend operation of the device until it has been repaired by the manufacturer or other person holding an applicable specific license from the administrative authority, the U.S. Nuclear Regulatory Commission, or any other agreement state or licensing state to repair such devices, or disposed of by transfer to a person authorized by an applicable specific license to receive the radioactive material contained in the device and, within 30 days, furnish to the Office of Environmental Compliance, Emergency and Radiological Services Division, a report containing a brief description of the event and the remedial action taken;

f. do not abandon the device containing radioactive material;

g. except as provided in Subparagraph D.3.h of this Section, transfer or dispose of the device containing radioactive material only by export as provided in 10 CFR Part 110 or by transfer to a specific licensee of the department, the U.S. Nuclear Regulatory Commission, or any other agreement state or licensing state whose specific license authorizes him or her to receive the device and within 30 days after transfer of a device to a specific licensee shall furnish to the Office of Environmental Compliance, Emergency and Radiological Services Division, a report containing identification of the device by manufacturer's name and model number, and the name and address of the person receiving the device. No report is required if the device is transferred to the specific licensee in order to obtain a replacement device;

h. transfer the device to another general licensee only:

i. where the device remains in use at a particular location. In such case the transferor shall give the transferee a copy of this regulation and any safety documents identified in the label on the device and, within 30 days of the transfer, report to the Office of Environmental Compliance, Emergency and Radiological Services Division, the manufacturer's name and the model number of the device transferred, the name and address of the transferee, and the name and/or position of an individual who may constitute a point of contact between the department and the transferee; or

ii. where the device is held in storage by an intermediate person in the original shipping container at its intended location of use prior to initial use by a general licensee;

i. comply with the provisions of LAC 33:XV.485 and 486 for reporting radiation incidents, theft, or loss of

licensed material. Such person shall be exempt from the other requirements of Chapters 4 and 10 of these regulations;

j. Reserved.

k. appoint an individual responsible for having knowledge of the appropriate regulations and requirements and the authority for taking required actions to comply with appropriate regulations and requirements. The general licensee, through this individual, shall ensure the day-to-day compliance with the appropriate regulations and requirements. This appointment does not relieve the general licensee of any of its responsibility in this regard;

l. register, in accordance with the provisions in this Subparagraph, devices containing at least 370 MBq (10 mCi) of cesium-137, 3.7 MBq (0.1 mCi) of strontium-90, 37 MBq (1 mCi) of cobalt-60, or 37 MBq (1 mCi) of americium-241 or any other transuranic (i.e., element with atomic number greater than uranium (92)), based on the activity indicated on the label. Each address for a location of use, as described in this Subparagraph, represents a separate general licensee and requires a separate registration and fee:

i. annual registration with the Office of Environmental Compliance, Emergency and Radiological Services Division, shall include payment of the fee required by LAC 33:XV.2505. Registration must be done by verifying, correcting, and/or adding to the information provided in a request for registration received from the department. The registration information must be submitted to the department within 30 days of the date of the request for registration or as otherwise indicated in the request;

ii. in registering devices, the general licensee shall furnish the following information, as indicated on the label, and any other information specifically requested by the department:

(a). the name and mailing address of the general licensee;

(b). information about each device:

(i). the manufacturer (or initial transferor);

(ii). the model number;

(iii). the serial number; and

(iv). the radioisotope and activity;

(c). the name, title, and telephone number of the responsible person designated as a representative of the general licensee and identified by the transferee to have knowledge of and authority to take actions to ensure day-to-day compliance with the appropriate regulations and requirements without relieving the general licensee of any of his or her responsibility in this regard;

(d). the address or location at which the devices are used and/or stored. For portable devices, list the address of the primary place of storage;

(e). certification by the responsible representative of the general licensee that the information concerning the devices has been verified through a physical inventory and checking of label information; and

(f). certification by the responsible representative of the general licensee that he or she is aware of the requirements of the general license;

iii. persons generally licensed by an agreement state with respect to devices meeting the criteria in this Subparagraph are not subject to registration requirements if the devices are used in areas subject to department jurisdiction for a period less than 180 days in any calendar year. The department will not request registration information from such licensees;

m. report changes to the mailing address for the location of use (including change in the name of the general licensee) to the Office of Environmental Compliance, Emergency and Radiological Services Division, within 30 days of the effective date of the change. For a portable device, a report of address change is only required for a change in the device's primary place of storage;

n. not hold devices that are not in use for longer than two years. If devices with shutters are not being used, the shutter must be locked in the closed position. The testing required by this Subsection need not be performed during the period of storage only. However, when devices are put back into service or transferred to another person, and have not been tested within the required test interval, they must be tested for leakage before use or transfer and the shutter tested before use. Devices kept in standby for future use are excluded from the two-year time limit if the general licensee performs quarterly physical inventories of these devices while they are in standby.

4. The general license in LAC 33:XV.322.D.1 does not authorize the manufacture of devices containing radioactive material.

5. The general license provided in LAC 33:XV.322.D.1 is subject to the provisions of LAC 33:XV.104-109, 331, 340, 350, and Chapter 15.

E. Luminous Safety Devices for Aircraft

1. A general license is hereby issued to own, receive, acquire, possess, and use tritium or promethium-147 contained in luminous safety devices for use in aircraft, provided that:

a. each device contains not more than 10 curies of tritium or 300 millicuries of promethium-147; and

b. each device has been manufactured, assembled, or imported in accordance with a specific license issued by the U.S. Nuclear Regulatory Commission, or each device has been manufactured or assembled in accordance with the specifications contained in a specific license issued by the administrative authority or any other agreement state to the manufacturer or assembler of such device pursuant to licensing requirements equivalent to those in 10 CFR 32.53.

2. Persons who own, receive, acquire, possess, or use luminous safety devices in accordance with the general

license in LAC 33:XV.322.E.1 are exempt from the requirements of Chapters 4 and 10 of these regulations, except that they shall comply with the provisions of LAC 33:XV.485 and 486.

3. This general license does not authorize the manufacture, assembly, or repair of luminous safety devices containing tritium or promethium-147.

4. This general license does not authorize the ownership, receipt, acquisition, possession, or use of promethium-147 contained in instrument dials.

5. This general license is subject to the provisions of LAC 33:XV.104-109, 331, 340, 350, and Chapter 15.

F. Ownership of Radioactive Material. A general license is hereby issued to own radioactive material without regard to quantity. Notwithstanding any other provisions of this Chapter, this general license does not authorize the manufacture, production, transfer, receipt, possession, or use of radioactive material.

G. Calibration and Reference Sources: Americium-241, Plutonium, or Radium-226

1. A general license is hereby issued to those persons listed below to own, receive, acquire, possess, use, and transfer, in accordance with the provisions of LAC 33:XV.322.G.4 and 5, americium-241 in the form of calibration or reference sources:

a. any person who holds a specific license issued by the administrative authority that authorizes him or her to receive, possess, use, and transfer radioactive material; and

b. any person in this state who holds a specific license issued by the U.S. Nuclear Regulatory Commission that authorizes him or her to receive, possess, use, and transfer special nuclear material.

2. A general license is hereby issued to own, receive, possess, use, and transfer plutonium in the form of calibration or reference sources in accordance with the provisions of LAC 33:XV.322.G.4 and 5 to any person who holds a specific license issued by the administrative authority that authorizes him or her to receive, possess, use, and transfer radioactive material.

3. A general license is hereby issued to own, receive, possess, use, and transfer radium-226 in the form of calibration or reference sources in accordance with the provisions of LAC 33:XV.322.G.4 and 5 to any person who holds a specific license issued by the administrative authority that authorizes him or her to receive, possess, use, and transfer radioactive material.

4. The general licenses in LAC 33:XV.322.G.1, 2, and 3 apply only to calibration or reference sources that have been manufactured in accordance with the specifications contained in a specific license issued to the manufacturer or importer of the sources by the U.S. Nuclear Regulatory Commission pursuant to 10 CFR 32.57 or 10 CFR 70.39 or that have been manufactured in accordance with the specification contained in a specific license issued to the manufacturer by the administrative authority or any other agreement state or licensing state pursuant to licensing requirements equivalent to those contained in 10 CFR 32.57 or 10 CFR 70.39 of the regulations of the U.S. Nuclear Regulatory Commission.

5. The general licenses provided in LAC 33:XV.322.G.1, 2, and 3 are subject to the provisions of LAC 33:XV.104-109, 331, 340, 350, and Chapter 15. In addition, persons who own, receive, acquire, possess, use, or transfer one or more calibration or reference sources pursuant to these general licenses:

a. shall not possess at any one time, at any one location of storage or use, more than 5 microcuries of americium-241, 5 microcuries of plutonium, and 5 microcuries of radium-226 in such sources;

b. shall not receive, possess, use, or transfer such source unless the source or the storage container bears a label that includes the following statement or a substantially similar statement that contains the information called for in the following statement:

The receipt, possession, use, and transfer of this source, Model _____, Serial No. _____, are subject to a general license and the regulations of the U.S. Nuclear Regulatory Commission or of a state with which the Commission has entered into an agreement for the exercise of regulatory authority or a licensing state. Do not remove this label.

CAUTION–RADIOACTIVE MATERIAL–THIS SOURCE CONTAINS
(Show the name of the appropriate material) DO NOT TOUCH
RADIOACTIVE PORTION OF THIS SOURCE.

_____

(Name of Manufacturer or Importer)

c. shall not transfer, abandon, or dispose of such source except by transfer to a person authorized by a license from the administrative authority, the U.S. Nuclear Regulatory Commission, any other agreement state, or a licensing state to receive the source;

d. shall store such source, except when the source is being used, in a closed container adequately designed and constructed to contain americium-241, plutonium, or radium-226 that might otherwise escape during storage; and

e. shall not use such source for any purpose other than the calibration of radiation detectors or the standardization of other sources.

6. These general licenses do not authorize the manufacture of calibration or reference sources containing americium-241, plutonium, or radium-226.

H. Reserved.

I. Calibration and Reference Sources: Mock Iodine-125

1. A general license is hereby issued to any physician, clinical laboratory, or hospital to own, receive, acquire, possess, transfer, or use, in accordance with the provisions of LAC 33:XV.322.I.2, 3, 4, 5, and 6, mock iodine-125 reference or calibration sources, in units not exceeding 0.05

microcurie of iodine-129 and 0.005 microcurie of americium-241 each for use in vitro clinical or laboratory tests not involving internal or external administration of radioactive material, or the radiation therefrom, to human beings or animals.

2. No person shall receive, acquire, possess, use, or transfer radioactive material pursuant to the general license established by LAC 33:XV.322.I.1 until he or she has been authorized by LAC 33:XV.325, 327, or 718, to use radioactive material. The physician, clinical laboratory, or hospital shall furnish the following information and such other information as may be required:

a. name and address of the physician, clinical laboratory, or hospital; and

b. the location of use.

3. A person who receives, acquires, possesses, or uses radioactive material pursuant to the general license established by LAC 33:XV.322.I.1 shall comply with the following:

a. the general licensee shall store the radioactive material, until used, in the original shipping container or in a container providing equivalent radiation protection;

b. the general licensee shall use the radioactive material only for the uses authorized by LAC 33:XV.322.I.1;

c. the general licensee shall transfer the radioactive material only in accordance with LAC 33:XV.340; and

d. the general licensee shall dispose of the mock iodine-125 reference or calibration sources described in LAC 33:XV.322.I.1 as required by LAC 33:XV.431.

4. The general licensee shall not receive, acquire, possess, or use radioactive material pursuant to LAC 33:XV.322.I.1 except as prepackaged units labeled in accordance with the provisions of an applicable specific license issued pursuant to LAC 33:XV.328.H or in accordance with the provisions of a specific license issued by the U.S. Nuclear Regulatory Commission, any agreement state, or licensing state that authorizes the manufacture and distribution of iodine-125, iodine-131, carbon-14, hydrogen-3 (tritium), iron-59, selenium-75, cobalt-57, or mock iodine-125 to persons generally licensed under LAC 33:XV.322.I or its equivalent.

5. Any person using radioactive material in accordance with the general license of Paragraph I.1 of this Section is exempt from the requirements of Chapters 4 and 10 of these regulations with respect to radioactive material covered by that general license, except that such persons using the mock iodine-125 described in Paragraph I.1 of this Section shall comply with the provisions of LAC 33:XV.431, 485, and 486.

J. Ice Detection Devices

1. A general license is hereby issued to own, receive, acquire, possess, use, and transfer strontium-90 contained in ice detection devices, provided each device contains not more than 50 microcuries of strontium-90 and each device has been manufactured or imported in accordance with a specific license issued by the U.S. Nuclear Regulatory Commission, or each device has been manufactured in accordance with the specifications contained in a specific license issued by the administrative authority or any other agreement state to the manufacturer of such device pursuant to licensing requirements equivalent to those in 10 CFR 32.61 of the regulations of the U.S. Nuclear Regulatory Commission.

2. Persons who own, receive, acquire, possess, use, or transfer strontium-90 contained in ice detection devices pursuant to the general license in LAC 33:XV.322.J:

a. shall, upon occurrence of visually observable damage, such as a bend or crack or discoloration from overheating to the device, discontinue use of the device until it has been inspected, tested for leakage, and repaired by a person holding a specific license from the administrative authority, the U.S. Nuclear Regulatory Commission, or any other agreement state to manufacture or service such devices; or shall dispose of the device pursuant to the provisions of LAC 33:XV.431;

b. shall assure that all labels affixed to the device at the time of receipt, and which bear a statement that prohibits removal of the labels, are maintained in legible form thereon; and

c. are exempt from the requirements of LAC 33:XV.Chapters 4 and 10, except that such persons shall comply with the provisions of LAC 33:XV.431, 485, and 486.

3. This general license does not authorize the manufacture, assembly, disassembly, or repair of strontium-90 in ice-detection devices.

4. This general license is subject to the provisions of LAC 33:XV.104-109, 331, 340, 350, and Chapter 15.

AUTHORITY NOTE: Promulgated in accordance with R.S. 30:2001 et seq.

HISTORICAL NOTE: Promulgated by the Department of Environmental Quality, Nuclear Energy Division, LR 13:569 (October 1987), amended by the Office of Air Quality and Radiation Protection, Radiation Protection Division, LR 18:34 (January 1992), amended by the Office of Environmental Assessment, Environmental Planning Division, LR 26:2567 (November 2000), LR 27:1226 (August 2001), LR 30:1663 (August 2004), amended by the Office of the Secretary, Legal Affairs Division, LR 31:2524 (October 2005), LR 32:811 (May 2006).

Subchapter D. Specific Licenses

§324. Filing Application for Specific Licenses

A. Applications for specific licenses shall be filed on a form prescribed by the Office of Environmental Compliance, Emergency and Radiological Services Division, or in any other manner specified by the department.

B. The department may at any time after the filing of the original application, and before the expiration of the license, require further statements in order to enable the department

to determine whether the application should be granted or denied or whether a license should be modified or revoked.

C. Each application shall be signed by the applicant or licensee or by a person duly authorized to act for and on his or her behalf.

D. An application for a license may include a request for a license authorizing one or more activities.

E. In the application, the applicant may incorporate by reference information contained in previous applications, statements, or reports filed with the department, provided such references are clear and specific.

F. Applications and documents submitted to the department shall be available for public inspection unless the administrative authority makes a written determination of confidentiality in accordance with LAC 33:I.Chapter 5.

G. If the department determines that any material should not be afforded confidentiality, a written denial of the request will be issued to the requestor in accordance with LAC 33:I.Chapter 5.

H. Each application to possess radioactive materials in unsealed form, on foils or plated sources, or sealed in glass in excess of the quantities in LAC 33:XV.399.Appendix C (Quantities of Radioactive Materials Requiring Consideration of the Need for an Emergency Plan for Responding to a Release) must contain either:

1. an evaluation showing that the maximum dose to a person off-site due to a release of radioactive materials would not exceed 1 rem effective dose equivalent or 5 rems to the thyroid; or

2. an emergency plan for responding to a release of radioactive material.

I. One or more of the following factors may be used to support an evaluation submitted under LAC 33:XV.324.H.1:

1. the radioactive material is physically separated so that only a portion could be involved in an accident;

2. all or part of the radioactive material is not subject to release during an accident because of the way it is stored or packaged;

3. the release fraction in the respirable size range would be lower than the release fraction shown in LAC 33:XV.399.Appendix C due to the chemical or physical form of the material;

4. the solubility of the radioactive material would reduce the dose received;

5. facility design or engineered safety features in the facility would cause the release fraction to be lower than shown in LAC 33:XV.399.Appendix C;

6. operating restrictions or procedures would prevent a release fraction as large as that shown in LAC 33:XV.399.Appendix C; or

7. other factors appropriate for the specific facility.

J. An emergency plan for responding to a release of radioactive material submitted under LAC 33:XV.324.H.2 must include the following information:

1. Facility Description. A brief description of the licensee's facility and area near the site;

2. Types of Accidents. An identification of each type of radioactive materials accident for which protective actions may be needed;

3. Classification of Accidents. A classification system for classifying accidents as alerts or site area emergencies;

4. Detection of Accidents. Identification of the means of detecting each type of accident in a timely manner;

5. Mitigation of Consequences. A brief description of the means and equipment for mitigating the consequences of each type of accident, including those provided to protect workers on-site, and description of the program for maintaining the equipment;

6. Assessment of Releases. A brief description of the methods and equipment to assess releases of radioactive materials;

7. Responsibilities. A brief description of the responsibilities of licensee personnel should an accident occur, including identification of personnel responsible for promptly notifying off-site response organizations and the department. Also, responsibilities for developing, maintaining, and updating the plan will be included;

8. Notification and Coordination. A commitment to and a brief description of the means to promptly notify off-site response organizations and request off-site assistance, including medical assistance for the treatment of contaminated injured on-site workers when appropriate. A control point must be established. The notification and coordination must be planned so that unavailability of some personnel, parts of the facility, and some equipment will not prevent the notification and coordination. The licensee shall also commit to notify the Office of Environmental Compliance by telephone at (225) 765-0160 immediately after notification of the appropriate off-site response organizations and not later than one hour after the licensee declares an emergency[1];

9. Information to be Communicated. A brief description of the types of information on facility status, radioactive releases, and recommended protective actions, if necessary, to be given to off-site response organizations and to the department;

10. Training. A brief description of the frequency, performance objectives and plans for the training that the licensee will provide workers on how to respond to an emergency including any special instructions and orientation tours the licensee would offer to fire, police, medical, and other emergency personnel. The training shall familiarize personnel with site-specific emergency procedures. Also, the training shall thoroughly prepare site personnel for their responsibilities in the event of accident scenarios postulated

as most probable for the specific site, including the use of team training for such scenarios;

11. Safe Shutdown. A brief description of the means of restoring the facility to a safe condition after an accident;

12. Exercises. Provisions for conducting quarterly communications checks with off-site response organizations and biennial on-site exercises to test response to simulated emergencies. Quarterly communications checks with off-site response organizations must include the check and update of all necessary telephone numbers. The licensee shall invite off-site response organizations to participate in the biennial exercises. Participation of off-site response organizations in biennial exercises, although recommended, is not required. Exercises must use accident scenarios postulated as most probable for the specific site, and the scenarios shall not be known to most exercise participants. The licensee shall critique each exercise using individuals not having direct implementation responsibility for the plan. Critiques of exercises must evaluate the appropriateness of the plan, emergency procedures, facilities, equipment, training of personnel, and overall effectiveness of the response. Deficiencies found by the critiques must be corrected; and

13. Hazardous Chemicals. A certification that the applicant has met its responsibilities under the Emergency Planning and Community Right-to-Know Act of 1986, Title III, Pub. L. 99-499, if applicable to the applicant's activities at the proposed place of use of the byproduct material.

K. The licensee shall allow the off-site response organizations expected to respond in case of accident 60 days to comment on the licensee's emergency plan before submitting it to the Office of Environmental Compliance, Emergency and Radiological Services Division. The licensee shall provide any comments received within the 60 days to the Office of Environmental Compliance, Emergency and Radiological Services Division, with the emergency plan.

[1]These reporting requirements do not supersede or release licensees of complying with requirements under the Emergency Planning and Community Right-to-Know Act of 1986, Title III, Pub. L. 99-499 or other state or federal reporting requirements.

AUTHORITY NOTE: Promulgated in accordance with R.S. 30:2001 et seq.

HISTORICAL NOTE: Promulgated by the Department of Environmental Quality, Nuclear Energy Division, LR 13:569 (October 1987), amended by the Office of Air Quality and Radiation Protection, Radiation Protection Division, LR 18:34 (January 1992), LR 20:179 (February 1994), amended by the Office of the Secretary, LR 22:345 (May 1996), amended by the Office of Environmental Assessment, Environmental Planning Division, LR 26:2567 (November 2000), LR 27:1227 (August 2001), amended by the Office of the Secretary, Legal Affairs Division, LR 31:2525 (October 2005).

§325. General Requirements for the Issuance of Specific Licenses

A. A license application will be approved if the department determines that:

1. the applicant is adequately qualified and experienced to use the material in question for the purpose requested in accordance with these regulations in such a manner as to minimize danger to public welfare and safety or property;

2. the applicant's proposed equipment, facilities, and procedures are adequate to minimize danger to public welfare and safety or property;

3. the issuance of the license will not be inimical to the welfare and safety of the public; and

4. the applicant satisfies any applicable special requirements contained in LAC 33:XV.326, 327, 328, Chapters 5, 7, 13, or 20.

B. Environmental Report, Commencement of Construction. In the case of an application for a license to receive and possess radioactive material for commercial waste disposal by land burial, or for the conduct of any other activity that the department determines will significantly affect the quality of the environment, construction of the plant or facility in which the activity will be conducted shall not commence until the department has concluded, after weighing the environmental, economic, technical, and other benefits against environmental costs and considering available alternatives, that the action called for is the issuance of the proposed license, with any appropriate conditions to protect environmental values. Commencement of construction prior to such conclusion shall be grounds for denial of a license to receive and possess radioactive material in such plant or facility. As used in this Section the term *commencement of construction* means any clearing of land, excavation, or other substantial action that would adversely affect the environment of a site. The term does not mean site exploration, necessary roads for site exploration, borings to determine foundation conditions, or other preconstruction monitoring or testing to establish background information related to the suitability of the site or the protection of environmental values.

C. Financial Assurance Arrangements for Site Reclamation

1. Pursuant to R.S. 30:2115, and as otherwise provided, financial assurance arrangements for site reclamation, which may consist of financial assurance bonds, cash deposits, letters, or lines of credit, or any combination of the above for the categories of licensees listed in LAC 33:XV.325.C.4 shall be established to ensure the protection of the public health and safety in the event of abandonment, default, or other inability of the licensee to meet the requirements of the act and these regulations.

a. The amount of funds to be ensured by such financial assurance arrangements shall be based on department-approved cost estimates.

b. Self-insurance, or any arrangement that essentially constitutes self-insurance, will not satisfy the assurance requirement since this provides no additional assurance other than that which already exists through license requirements.

2. The arrangements required in LAC 33:XV.325.C.1 shall be established prior to issuance of the license to assure that sufficient funds will be available to carry out the decontamination and decommissioning of the facility.

3. Amendments to licenses in effect on February 21, 1992, or the effective date of this regulation may be issued providing that the required financial assurance arrangements are established within 90 days after the effective date of these regulations.

4. The following specific licensees are required to make financial assurance arrangements:

a. major processors;

b. waste-handling licensees;

c. facilities formerly licensed by the U.S. Atomic Energy Commission or U.S. Nuclear Regulatory Commission;

d. all others except persons exempt pursuant to LAC 33:XV.325.C.5.

5. The following are exempt from the requirements of LAC 33:XV.325.C.1:

a. all state, local, or other government agencies, unless they are subject to LAC 33:XV.325.C.4.b;

b. persons authorized to possess no more than 1,000 times the quantity specified in LAC 33:XV.399.Appendix D or a combination of radioactive material listed therein as given in LAC 33:XV.399.Appendix D;

c. persons authorized to possess hydrogen-3 contained as hydrogen gas in a sealed source; or

d. persons authorized to possess radioactive noble gases in sealed sources with no radioactive daughter product with half-life greater than 30 days.

D. Financial Assurance and Recordkeeping for Decommissioning

1. Each applicant for a specific license authorizing the possession and use of unsealed radioactive material of half-life greater than 120 days and in quantities exceeding 10^5 times the applicable quantities set forth in LAC 33:XV.399.Appendix D shall submit a decommissioning funding plan as described in Paragraph D.6 of this Section. The decommissioning funding plan must also be submitted when a combination of isotopes is involved if R divided by 10^5 is greater than 1 (unity rule), where R is defined here as the sum of the ratios of the quantity of each isotope to the applicable value in LAC 33:XV.399.Appendix D.

2. Each holder of, or applicant for, any specific license authorizing the possession and use of radioactive material of half-life greater than 120 days and in quantities exceeding 10^{12} times the applicable quantities set forth in LAC 33:XV.399.Appendix D (or when a combination of isotopes is involved if R, as defined in Paragraph D.1 of this Section, divided by 10^{12} is greater than 1), shall submit a decommissioning funding plan as described in Paragraph D.6 of this Section. The decommissioning funding plan must be submitted to the department by December 2, 2005.

3. Each applicant for a specific license authorizing possession and use of radioactive material of half-life greater than 120 days and in quantities specified in Paragraph D.5 of this Section shall either:

a. submit a decommissioning funding plan as described in Paragraph D.6 of this Section; or

b. submit a certification that financial assurance for decommissioning has been provided in the amount prescribed by Paragraph D.5 of this Section using one of the methods described in Paragraph D.7 of this Section. For an applicant, this certification may state that the appropriate assurance will be obtained after the application has been approved and the license issued, but prior to the receipt of licensed material. If the applicant defers execution of the financial instrument until after the license has been issued, a signed original of the financial instrument obtained to satisfy the requirements of Paragraph D.7 of this Section shall be submitted to the Office of Environmental Compliance, Emergency and Radiological Services Division, before receipt of licensed material. If the applicant does not defer execution of the financial instrument, the applicant shall submit to the Office of Environmental Compliance, Emergency and Radiological Services Division, as part of the certification, a signed original of the financial instrument obtained to satisfy the requirements of Paragraph D.7 of this Section.

4. Each holder of a specific license of a type described in Paragraph D.1 or 2 of this Section shall provide financial assurance for decommissioning in accordance with the criteria set forth in this Section.

a. Each holder of a specific license of a type described in Paragraph D.1 of this Section shall submit a decommissioning funding plan, as described in Paragraph D.6 of this Section, or a certification of financial assurance for decommissioning in an amount at least equal to $1,125,000 in accordance with the criteria set forth in this Section. If the licensee submits the certification of financial assurance rather than a decommissioning funding plan, the licensee shall include a decommissioning funding plan in any application for license renewal.

b. Each holder of a specific license of a type described in Paragraph D.2 of this Section shall submit a certification of financial assurance for decommissioning, or a decommissioning funding plan, as described in Paragraph D.6 of this Section, in accordance with the criteria set forth in this Section.

c. Any licensee who has submitted an application for renewal of license in accordance with LAC 33:XV.333 shall provide financial assurance for decommissioning in accordance with Paragraphs D.1 and 2 of this Section. This assurance shall be submitted when this rule becomes effective.

d. Waste collectors and waste processors, as defined in LAC 33:XV.499.Appendix D, shall provide financial

assurance in an amount based on a decommissioning funding plan as described in Paragraph D.6 of this Section. The decommissioning funding plan shall include the cost of disposal of the maximum amount (in curies) of radioactive material permitted by license, and the cost of disposal of the maximum quantity, by volume, of radioactive material that could be present at the licensee's facility at any time, in addition to the cost to remediate the licensee's site to meet the license termination criteria of LAC 33:Part XV. The decommissioning funding plan must be submitted by December 2, 2005.

5. The following table lists required amounts of financial assurance for decommissioning by quantity of material. Licensees required to submit the $1,125,000 amount shall do so by December 2, 2005. Licensees required to submit the $113,000 or $225,000 amount shall do so by June 2, 2006. Licensees having possession limits exceeding the upper bounds of this table shall base financial assurance on a decommissioning funding plan.

Greater than 10^4 but less than or equal to 10^5 times the applicable quantities of LAC 33:XV.399.Appendix D in unsealed form (for a combination of isotopes, if R, as defined in Paragraph D.1 of this Section, divided by 10^4 is greater than l but R divided by 10^5 is less than or equal to 1).	$1,125,000
Greater than 10^3 but less than or equal to 10^4 times the applicable quantities of LAC 33:XV.399.Appendix D in unsealed form (for a combination of isotopes, if R, as defined in Paragraph D.1 of this Section, divided by 10^3 is greater than l but R divided by 10^4 is less than or equal to 1).	$225,000
Greater than 10^{10} times the applicable quantities of LAC 33:XV.399.Appendix D in sealed sources or plated foils (for a combination of isotopes, if R, as defined in Paragraph D.1 of this Section, divided by 10^{10} is greater than 1).	$113,000

6. Each decommissioning funding plan shall contain a cost estimate for decommissioning and a description of the method of assuring funds for decommissioning from Paragraph D.7 of this Section, including means of adjusting cost estimates and associated funding levels periodically over the life of the facility. Cost estimates shall be adjusted at intervals not to exceed three years. The decommissioning funding plan shall also contain a certification by the licensee that financial assurance for decommissioning has been provided in the amount of the cost estimate for decommissioning and a signed original of the financial instrument obtained to satisfy the requirements of Paragraph D.7 of this Section.

7. Financial assurance for decommissioning shall be provided by one or more of the following methods.

a. Prepayment. Prepayment is the deposit prior to the start of operation into an account segregated from licensee assets and outside the licensee's administrative control of cash or liquid assets such that the amount of funds would be sufficient to pay decommissioning costs. Prepayment may be in the form of a trust, escrow account, government fund, certificate of deposit, or deposit of government securities.

b. Surety Method, Insurance, or Other Guarantee Method. These methods guarantee that decommissioning costs will be paid. A surety method may be in the form of a surety bond, letter of credit, or line of credit. A parent company guarantee of funds for decommissioning costs based on a financial test may be used if the guarantee and test are as contained in LAC 33:XV.399.Appendix B. A parent company guarantee may not be used in combination with other financial methods to satisfy the requirements of this Section. For commercial corporations that issue bonds, a guarantee of funds by the applicant or licensee for decommissioning costs based on a financial test may be used if the guarantee and test are as contained in LAC 33:XV.399.Appendix B. For commercial companies that do not issue bonds, a guarantee of funds by the applicant or licensee for decommissioning costs may be used if the guarantee and test are as contained in LAC 33:XV.399.Appendix E. For nonprofit entities, such as colleges, universities, and nonprofit hospitals, a guarantee of funds by the applicant or licensee may be used if the guarantee and test are as contained in LAC 33:XV.399.Appendix F. A guarantee by the applicant or licensee may not be used in combination with any other financial methods used to satisfy the requirements of this Section or in any situation where the applicant or licensee has a parent company holding majority control of the voting stock of the company. Any surety method or insurance used to provide financial assurance for decommissioning shall contain the following conditions.

i. The surety method or insurance must be open-ended or, if written for a specified term, such as five years, must be renewed automatically unless 90 days or more prior to the renewal date, the issuer notifies the Office of Environmental Compliance, Emergency and Radiological Services Division, the beneficiary, and the licensee of its intention not to renew. The surety method or insurance must also provide that the full face amount be paid to the beneficiary automatically prior to the expiration without proof of forfeiture if the licensee fails to provide a replacement acceptable to the department within 30 days after receipt of notification of cancellation.

ii. The surety method or insurance must be payable to a trust established for decommissioning costs. The trustee and trust must be acceptable to the department. An acceptable trustee includes an appropriate state or federal government agency or an entity that has the authority to act as a trustee and whose trust operations are regulated and examined by a federal or state agency.

iii. The surety method or insurance must remain in effect until the department has terminated the license.

c. External Sinking Fund. An external sinking fund shall have deposits made to it at least annually, and be coupled with a surety method or insurance, the value of which may decrease by the amount being accumulated in the

sinking fund. An external sinking fund is a fund established and maintained by setting aside funds periodically in an account segregated from licensee assets and outside the licensee's administrative control in which the total amount of funds would be sufficient to pay decommissioning costs at the time termination of operation is expected. An external sinking fund may be in the form of a trust, escrow account, government fund, certificate of deposit, or deposit of government securities. The surety or insurance provisions must be as stated in Subparagraph D.7.b of this Section.

d. Statement of Intent. In the case of federal, state, or local government licensees, a statement of intent shall be included containing a cost estimate for decommissioning or an amount based on the table in Paragraph D.5 of this Section, and indicating that funds for decommissioning will be obtained when necessary.

e. Arrangement with Governmental Entity. When a governmental entity is assuming custody and ownership of a site, an arrangement shall be made that is deemed acceptable by such governmental entity.

8. Each person licensed under this Chapter shall keep records of information important to the decommissioning of the facility in an identified location until the site is released for unrestricted use. Before licensed activities are transferred or assigned in accordance with LAC 33:XV.331.B, licensees shall transfer all records described in this Paragraph to the new licensee. In this case, the new licensee will be responsible for maintaining these records until the license is terminated. If records important to the decommissioning of a facility are kept for other purposes, reference to these records and their locations may be used. Information the department considers important to decommissioning consists of the following:

a. records of spills or other unusual occurrences involving the spread of contamination in and around the facility, equipment, or site. These records may be limited to instances when contamination remains after any cleanup procedures or when there is reasonable likelihood that contaminants may have spread to inaccessible areas as in the case of possible seepage into porous materials such as concrete. These records must include any known information on identification of involved nuclides, quantities, forms, and concentrations;

b. as-built drawings and modifications of structures and equipment in restricted areas where radioactive materials are used and/or stored, and of locations of possible inaccessible contamination such as buried pipes that may be subject to contamination. If required drawings are referenced, each relevant document need not be indexed individually. If drawings are not available, the licensee shall substitute appropriate records of available information concerning these areas and locations;

c. records of the cost estimate performed for the decommissioning funding plan or of the amount certified for decommissioning, and records of the funding method used for assuring funds if either a funding plan or certification is used;

d. except for areas containing only sealed sources (provided the sources have not leaked or no contamination remains after any leakage has occurred) or radioactive materials having only half-lives of less than 65 days, a list contained in a single document and updated every two years that shall be kept on the following:

i. all areas designated and formerly designated *restricted areas* as defined in LAC 33:XV.102;

ii. all areas outside of restricted areas that require documentation under Subparagraph D.8.a of this Section;

iii. all areas outside of restricted areas where current and previous wastes have been buried, as documented under LAC 33:XV.478; and

iv. all areas outside of restricted areas that contain material such that, if the license expired, the licensee would be required to either decontaminate the area to meet the criteria for decommissioning in LAC 33:XV.332.E, or apply for approval for disposal under LAC 33.XV.461.

AUTHORITY NOTE: Promulgated in accordance with R.S. 30:2001 et seq.

HISTORICAL NOTE: Promulgated by the Department of Environmental Quality, Nuclear Energy Division, LR 13:569 (October 1987), amended by the Office of Air Quality and Radiation Protection, Radiation Protection Division, LR 18:34 (January 1992), LR 23:1140 (September 1997), LR 24:2091 (November 1998), amended by the Office of Environmental Assessment, Environmental Planning Division, LR 26:1017 (May 2000), LR 26:2568 (November 2000), LR 27:1227 (August 2001), amended by the Office of Environmental Assessment, LR 31:44 (January 2005), LR 31:1578 (July 2005).

§326. Special Requirements for Issuance of Certain Specific Licenses for Radioactive Material

A. Specific Licenses for Irradiators. The department shall approve an application for a specific license for the use of licensed material in an irradiator in accordance with LAC 33:XV.Chapter 17, if the applicant meets the following requirements:

1. the applicant shall satisfy the general requirements specified in LAC 33:XV.Chapter 3;

2. the application shall describe the training provided to irradiator operators including:

a. classroom training;

b. on-the-job or simulator training;

c. safety reviews;

d. means employed by the applicant to test each operator's understanding of the department’s regulations and licensing requirements and the irradiator operating, safety, and emergency procedures; and

e. minimum training and experience of personnel who may provide training;

3. the application shall include an outline of the written operating and emergency procedures listed in LAC

33:XV.1735 that describes the radiation safety aspects of the procedures;

4. the application shall describe the organizational structure for managing the irradiator, specifically, the radiation safety responsibilities and authorities of the radiation safety officer and those management personnel who have radiation safety responsibilities or authorities. In particular, the application shall specify who, within the management structure, has the authority to stop unsafe operations. The application shall also describe the training and experience required for the position of radiation safety officer;

5. the application shall include a description of the access control systems required by LAC 33:XV.1713, the radiation monitors required by LAC 33:XV.1719, the method of detecting leaking sources required by LAC 33:XV.1741, including the sensitivity of the method, and a diagram of the facility that shows the locations of all required interlocks and radiation monitors;

6. if the applicant intends to perform leak testing, the applicant shall establish procedures for performing leak testing of dry-source-storage sealed sources and submit a description of these procedures to the department. The description shall include:

a. methods of collecting the leak test samples;

b. qualifications of the individual who collects the samples;

c. instruments to be used; and

d. methods of analyzing the samples;

7. if licensee personnel are to load or unload sources, the applicant shall describe the qualifications and training of the personnel and the procedures to be used. If the applicant intends to contract for source loading or unloading at its facility, the loading or unloading shall be done by a person specifically authorized by the department, the Nuclear Regulatory Commission, an agreement state, or a licensing state to load or unload irradiator sources; and

8. the applicant shall describe the inspection and maintenance checks, including the frequency of the checks required by LAC 33:XV.1743.

B. Reserved.

C. Reserved.

D. Reserved.

E. Use of Sealed Sources in Industrial Radiography

1. In addition to the requirements set forth in LAC 33:XV.325, a specific license for use of sealed sources in industrial radiography will be issued if the following conditions are met.

a. The applicant will have an adequate program for training radiographers and submits to the Office of Environmental Compliance, Emergency and Radiological Services Division, a schedule or description of such program that specifies the:

i. initial training;

ii. periodic training;

iii. on-the-job training; and

iv. means to be used by the licensee to determine the radiographer's knowledge and understanding of, and ability to comply with, the Louisiana radiation protection regulations, licensing requirements, and the operating and emergency procedures of the applicant.

b. The applicant has established and submits to the Office of Environmental Compliance, Emergency and Radiological Services Division, satisfactory written operating and emergency procedures as described in LAC 33:XV.576.

c. The applicant will have an adequate internal inspection system, or other management control, to ensure that license provisions, regulations, and the applicant's operating and emergency procedures are followed by radiographers; the inspection system shall include the performance of internal inspections not to exceed six months and the retention of records of such inspections for three consecutive years.

d. The applicant submits to the Office of Environmental Compliance, Emergency and Radiological Services Division, a description of his or her overall organizational structure pertaining to the industrial radiography program, including specified delegations of authority and responsibility for operation of the program.

e. The applicant who desires to conduct his or her own leak tests of sealed sources or exposure devices containing depleted uranium (DU) shielding has established adequate procedures to be followed in testing for possible leakage and contamination and submits to the Office of Environmental Compliance, Emergency and Radiological Services Division, a description of such procedures including:

i. instrumentation to be used and sample calculations showing the limits of detectability of the isotope(s) for which leak testing is required;

ii. methods of performing tests, e.g., points on equipment to be smeared and method of taking smear; and

iii. pertinent experience of the person who will perform the test.

f. The applicant proposes to conduct a program for inspection and maintenance of radiographic exposure devices and storage containers that is adequate to assure proper functioning of components important to safety.

g. The applicant submits procedures for verifying and documenting the certification status of radiographers and for ensuring that the certification of individuals as radiographers remains valid.

h. The applicant submits the qualifications of the individual designated as the radiation safety officer (RSO) as described in LAC 33:XV.573.E.

i. The applicant who intends to perform calibrations of survey instruments and/or alarming ratemeters must describe methods to be used and the experience of the person(s) who will perform the calibrations. All calibrations must be performed according to the procedures described and at the intervals prescribed in LAC 33:XV.543 and 577.

j. The applicant identifies and describes the location(s) of all field stations and permanent radiographic installations.

k. The applicant identifies the locations where all records required by these regulations will be maintained.

AUTHORITY NOTE: Promulgated in accordance with R.S. 30:2001 et seq.

HISTORICAL NOTE: Promulgated by the Department of Environmental Quality, Nuclear Energy Division, LR 13:569 (October 1987), amended by the Office of Air Quality and Radiation Protection, Radiation Protection Division, LR 18:34 (January 1992), LR 24:2092 (November 1998), amended by the Office of Environmental Assessment, Environmental Planning Division, LR 26:2569 (November 2000), LR 27:1228 (August 2001), LR 30:1188 (June 2004), amended by the Office of Environmental Assessment, LR 31:45 (January 2005), amended by the Office of the Secretary, Legal Affairs Division, LR 31:2525 (October 2005).

§327. Special Requirements for Specific Licenses of Broad Scope

[NOTE: This Section prescribes requirements for the issuance of specific licenses of broad scope for radioactive material ("broad licenses") and specifies certain regulations governing holders of such licenses. Authority to transfer possession or control by the manufacturer, processor, or producer of any equipment, device, commodity, or other product containing byproduct material whose subsequent possession, use, transfer, and disposal by all other persons are exempted from regulatory requirements may be obtained only from the U.S. Nuclear Regulatory Commission, Washington, D.C. 20555.]

A. Reserved.

B. An application for a specific license of broad scope will be approved if the following conditions are met.

1. The applicant satisfies the general requirements specified in LAC 33:XV.325.

2. The applicant has engaged in a reasonable number of activities involving the use of radioactive material.

3. The applicant has established administrative controls and provisions relating to organization and management, procedures, recordkeeping, material control, and accounting and management review that are necessary to assure safe operations, including:

a. the appointment of a radiation safety officer who is qualified by training and experience in radiation protection, and who is available for advice and assistance on radiation safety matters;

b. the establishment of a radiation safety committee composed of such persons as a radiation safety officer, a representative of management, and persons trained and experienced in the safe use of radioactive material; and

c. the establishment of appropriate administrative procedures to assure:

i. control of procurement and use of radioactive material;

ii. completion of safety evaluations of proposed uses of radioactive material that take into consideration such matters as the adequacy of facilities and equipment, training and experience of the user, and the operating or handling procedures; and

iii. review, approval, and recording by the radiation safety committee of safety evaluations of proposed uses prepared in accordance with LAC 33:XV.327.B.3.c.ii prior to use of the radioactive material.

C. Reserved.

D. Reserved.

E. Specific licenses of broad scope are subject to the following conditions.

1. Unless specific authorization is granted by the administrative authority, persons licensed pursuant to LAC 33:XV.327 shall not:

a. conduct tracer studies in the environment involving direct release of radioactive material;

b. receive, acquire, possess, use, or transfer devices containing 100,000 curies or more of radioactive material in sealed sources used for irradiation of materials;

c. conduct activities for which a specific license issued by the administrative authority under Chapters 7 and 13 is required; or

d. add or cause the addition of radioactive material to any food, beverage, cosmetic, drug, or other product designed for ingestion or inhalation by, or application to, a human being.

2. Each specific license of broad scope issued under this Chapter shall be subject to the condition that radioactive material possessed under the license may only be used by, or under the direct supervision of, individuals approved by the licensee's radiation safety committee.

AUTHORITY NOTE: Promulgated in accordance with R.S. 30:2001 et seq.

HISTORICAL NOTE: Promulgated by the Department of Environmental Quality, Nuclear Energy Division, LR 13:569 (October 1987), amended by the Office of Air Quality and Radiation Protection, Radiation Protection Division, LR 18:34 (January 1992).

§328. Special Requirements for Specific License to Manufacture, Assemble, Repair, or Distribute Commodities, Products, or Devices that Contain Radioactive Material

A. Licensing the Introduction of Radioactive Material into Products in Exempt Concentrations

1. In addition to the requirements set forth in LAC 33:XV.325, a specific license authorizing the introduction of radioactive material into a product or material to be transferred to persons exempt under LAC 33:XV.304.A.1 will be issued under the following conditions:

a. the applicant submits to the Office of Environmental Compliance, Emergency and Radiological Services Division, a description of the product or material into which the radioactive material will be introduced, the intended use of the radioactive material, and the product or material into which it is introduced, method of introduction, initial concentration of the radioactive material in the product or material, control methods to ensure that no more than the specified concentration is introduced into the product or material, estimated time interval between introduction and transfer of the product or material, and estimated concentration of the radioactive material in the product or material at the time of transfer;

b. the applicant provides reasonable assurance that the concentrations of radioactive material at the time of transfer will not exceed the concentrations in Schedule A of this Chapter, that reconcentration of the radioactive material in concentrations exceeding those in Schedule A is not likely, that use of lower concentrations is not feasible, and that the product or material is not likely to be incorporated in any food, beverage, cosmetic, drug, or other commodity or product designed for ingestion or inhalation by, or application to, a human being.

2. Each person licensed under this Subsection shall file an annual report with the Office of Environmental Compliance, Emergency and Radiological Services Division, that shall identify the type and quantity of each product or material into which radioactive material has been introduced during the reporting period; name and address of the person who owned or possessed the product or material into which radioactive material has been introduced, at the time of introduction; the type and quantity of radionuclide introduced into each such product or material; and the initial concentrations of the radionuclide in the product or material at time of transfer of the radioactive material by the licensee. If no transfers of radioactive material have been made pursuant to this Subsection during the reporting period, the report shall so indicate. The report shall cover the year ending June 30 and shall be filed within 30 calendar days thereafter.

B. Licensing the Distribution of Radioactive Material in Exempt Quantities

1. Authority to transfer possession or control by the manufacturer, processor, or producer of any equipment, device, commodity, or other product containing byproduct material whose subsequent possession, use, transfer, and disposal by all other persons are exempted from regulatory requirements may be obtained only from the U.S. Nuclear Regulatory Commission, Washington, D.C. 20555.

a. An application for a specific license to distribute naturally occurring or accelerator-produced radioactive material (NARM) to persons exempted from these regulations pursuant to LAC 33:XV.304.B will be approved if:

i. the radioactive material is not contained in any food, beverage, cosmetic, drug, or other commodity designed for ingestion or inhalation by, or application to, a human being;

ii. the radioactive material is in the form of processed chemical elements, compounds or mixtures, tissue samples, bioassay samples, counting standards, plated or encapsulated sources, or similar substances identified as radioactive and to be used for their radioactive properties but not incorporated into any manufactured or assembled commodity, product, or device intended for commercial distribution; and

iii. the applicant submits copies of prototype labels and brochures, and the Office of Environmental Compliance, Emergency and Radiological Services Division, approves such labels and brochures.

b. The license issued under LAC 33:XV.328.B.1 is subject to the following conditions.

i. No more than 10 exempt quantities shall be sold or transferred in any single transaction. However, an exempt quantity may be composed of fractional parts of one or more of the exempt quantity provided the sum of the fractions shall not exceed unity.

ii. Each exempt quantity shall be separately and individually packaged. No more than 10 such packaged exempt quantities shall be contained in any outer package for transfer to persons exempt pursuant to LAC 33:XV.304.B. The outer package shall be such that the dose rate at the external surface of the package does not exceed 0.5 millirem per hour.

iii. The immediate container of each quantity or separately packaged fractional quantity of radioactive material shall bear a durable, legible label that:

(a). identifies the radionuclide and the quantity of radioactivity; and

(b). bears the words "Radioactive Material."

iv. In addition to the labeling information required by LAC 33:XV.328.3.1.b.iii the label affixed to the immediate container or an accompanying brochure shall:

(a). state that the contents are exempt from licensing state requirements;

(b). bear the words "Radioactive Material—Not for Human Use—Introduction into Foods, Beverages, Cosmetics, Drugs, or Medicinals, or into Products

Manufactured for Commercial Distribution is Prohibited—Exempt Quantities Shall Not Be Combined"; and

(c). set forth appropriate additional radiation safety precautions and instructions relating to the handling, use, storage, and disposal of the radioactive material.

c. Each person licensed under this Subsection shall maintain records identifying, by name and address, each person to whom radioactive material is transferred for use under LAC 33:XV.304.B or the equivalent regulations of the licensing state and stating the kinds and quantities of radioactive material transferred. An annual summary report stating the total quantity of each radionuclide transferred under the specific license shall be filed with the Office of Environmental Compliance, Emergency and Radiological Services Division. Each report shall cover the year ending June 30 and shall be filed within 30 calendar days thereafter. If no transfers of radioactive material have been made pursuant to this Subsection during the reporting period, the report shall so indicate.

C. Licensing the Incorporation of Radioactive Material other than Source or Byproduct Material into Gas and Aerosol Detectors. An application for a specific license authorizing the incorporation of naturally occurring or accelerator-produced radioactive material (NARM) into gas and aerosol detectors to be distributed to persons exempt under LAC 33:XV.304.C.3 will be approved if the application satisfies requirements equivalent to those contained in 10 CFR 32.26. The maximum quantity of radium-226 in each device shall not exceed 0.1 microcurie (3.7 kBq).

D. Licensing the Manufacture and Distribution of Devices to Persons Generally Licensed under LAC 33:XV.322.D

l. An application for a specific license to manufacture or distribute devices containing radioactive material, excluding special nuclear material, to persons generally licensed under LAC 33:XV.322.D or equivalent regulations of the U.S. Nuclear Regulatory Commission, any other agreement state or licensing state will be approved under the following conditions.

a. The applicant satisfies the general requirements of LAC 33:XV.325.

b. The applicant submits to the Office of Environmental Compliance, Emergency and Radiological Services Division, sufficient information relating to the design, manufacture, prototype testing, quality control, labels, proposed uses, installation, servicing, leak testing, operating and safety instructions, and potential hazards of the device to provide reasonable assurance of the following.

i. The device can be safely operated by persons not having training in radiological protection.

ii. Under ordinary conditions of handling, storage, and use of the device, the radioactive material contained in the device will not be released or inadvertently removed from the device, and it is unlikely that any person will receive in any period of one calendar quarter a dose in excess of 10 percent of the limits specified in the table in LAC 33:XV.410.A.

iii. Under accident conditions (such as fire and explosion) associated with handling, storage, and use of the device, it is unlikely that any person would receive an external radiation dose or dose commitment in excess of the following organ doses.

(a). whole body, head and trunk active blood-forming organs, gonads, or lens of eye	15 rems
(b). hands and forearms, feet and ankles, localized areas of skin averaged over areas no larger than 1 square centimeter	200 rems
(c). other organs	50 rems

c. Each device bears a durable, legible, clearly visible label or labels approved by the department that contain in a clearly identified and separate statement:

i. instructions and precautions necessary to assure safe installation, operation and servicing of the device (document such as operating and service manuals may be identified in the label and used to provide this information);

ii. the requirement, or lack of requirement, for testing, or for testing any on-off mechanism and indicator, including the maximum time interval for such testing, and the identification of radioactive material by isotope, quantity of radioactivity, and date of determination of the quantity; and

iii. the information called for in the following statement in the same or substantially similar form:

(a). The receipt, possession, use, and transfer of this device Model _____, Serial No. _____, are subject to a general license or the equivalent and the regulations of the U.S. Nuclear Regulatory Commission or a state with which the U.S. Nuclear Regulatory Commission has entered into an agreement or the exercise of regulatory authority. This label shall be maintained on the device in a legible condition. Removal of this label is prohibited.

CAUTION - RADIOACTIVE MATERIAL

_____

(Name of Manufacturer or Distributor)

The model, serial number, and name of manufacturer or distributor may be omitted from this label provided the information is elsewhere specified in labeling affixed to the device.

(b). The receipt, possession, use, and transfer of this device, Model _____, Serial No. _____, are subject to a general license or the equivalent, and the regulations of a licensing state. This label shall be maintained on the device in a legible condition. Removal of this label is prohibited.

CAUTION – RADIOACTIVE MATERIAL

_____

(Name of Manufacturer or Distributor)

d. Each device having a separable source housing that provides the primary shielding for the source also bears,

on the source housing, a durable label containing the device model number and serial number, the isotope and quantity, the words "Caution—Radioactive Material," the radiation symbol described in LAC 33:XV.450, and the name of the manufacturer or initial distributor.

e. Each device meeting the criteria of LAC 33:XV.322.D.3.l bears a permanent (e.g., embossed, etched, stamped, or engraved) label affixed to the source housing, if separable, or to the device if the source housing is not separable, that includes the words "Caution—Radioactive Material" and, if practicable, the radiation symbol described in LAC 33:XV.450.

2. In the event the applicant desires that the device be required to be tested at intervals longer than six months, either for proper operation of the on-off mechanism and indicator, if any, or for leakage of radioactive material, or for both, the applicant shall include in his or her application sufficient information to demonstrate that such longer interval is justified by performance characteristics of the device or similar devices and by design features that have a significant bearing on the probability or consequences of leakage of radioactive material from the device or failure of the on-off mechanism and indicator. In determining the acceptable interval for the test for leakage of radioactive material, the department will consider information that includes, but is not limited to:

a. primary containment (source capsule);

b. protection of primary containment;

c. method of sealing containment;

d. containment construction materials;

e. form of contained radioactive material;

f. maximum temperature withstood during prototype tests;

g. maximum pressure withstood during prototype tests;

h. maximum quantity of contained radioactive material;

i. radiotoxicity of contained radioactive material; and

j. operating experience with identical devices or similarly designed and constructed devices.

3. In the event the applicant desires that the general licensee under LAC 33:XV.322.D, or under equivalent regulations of the U.S. Nuclear Regulatory Commission or of any other agreement state or licensing state, be authorized to install the device, collect the sample to be analyzed by a specific licensee for leakage of radioactive material, service the device, test the on-off mechanism and indicator, or remove the device from installation, he or she shall include in the application written instructions to be followed by the general licensee, estimated calendar quarter doses associated with such activity or activities, and bases for such estimates. The submitted information shall demonstrate that performance of such activity or activities by an individual untrained in radiological protection, in addition to other handling, storage, and use of devices under the general license, is unlikely to cause that individual to receive a calendar quarter dose in excess of 10 percent of the limits specified in LAC 33:XV.410.A.

a. If a device containing byproduct material is to be transferred for use under the general license referred to in this Subsection, each person who is licensed under this Subsection shall provide the information specified in this Subparagraph to each person to whom a device is to be transferred. This information must be provided before the device may be transferred. In the case of a transfer through an intermediate person, the information must also be provided to the intended user prior to initial transfer to the intermediate person. The required information includes:

i. a copy of the general license;

ii. copies of the appropriate records and of LAC 33:XV.485 and 486;

iii. a list of the services that can only be performed by a specific licensee;

iv. information on acceptable disposal options including estimated costs of disposal; and

v. an indication that the U.S. Nuclear Regulatory Commission's policy is to issue high civil penalties for improper disposal.

b. If byproduct material is to be transferred in a device for use under an equivalent general license of an agreement state, each person who is licensed under this Subsection shall provide the information specified in this Subparagraph to each person to whom a device is to be transferred. This information must be provided before the device may be transferred. In the case of a transfer through an intermediate person, the information must also be provided to the intended user prior to initial transfer to the intermediate person. The required information includes:

i. copies of this Subsection and of LAC 33:XV.485 and 486, and the appropriate records. If a copy of the U.S. Nuclear Regulatory Commission's regulations is provided to a prospective general licensee in lieu of the department's regulations, it shall be accompanied by a note explaining that use of the device is regulated by the department; if certain paragraphs of the regulations do not apply to the particular device, those paragraphs may be omitted;

ii. a list of the services that can only be performed by a specific licensee;

iii. information on acceptable disposal options including estimated costs of disposal; and

iv. the name or title, address, and telephone number of the contact at the agreement state regulatory agency from whom additional information may be obtained.

c. An alternative approach to informing customers may be proposed by the licensee for approval by the department.

d. Each device that is transferred after February 19, 2002, must meet the labeling requirements in Subparagraphs D.1.c-e of this Section.

e. If a notification of bankruptcy has been made under LAC 33:XV.331.E-F or the license is to be terminated, each person licensed under this Subsection shall provide, upon request, to the department and to any appropriate agreement state, records of final disposition, which must be maintained for a period of three years following the date of the recorded event.

4. Each person licensed under this Subsection to distribute devices to persons generally licensed shall do the following.

a. Furnish a copy of the general license contained in LAC 33:XV.322.D to each person to whom he or she directly or through an intermediate person transfers radioactive material in a device for use pursuant to the general license contained in LAC 33:XV.322.D. In the case where the transferee receives radioactive material in a device pursuant to a general license contained in the U.S. Nuclear Regulatory Commission's or agreement state's regulations equivalent to LAC 33:XV.322, furnish a copy of the general license contained in the U.S. Nuclear Regulatory Commission's, agreement state's, or licensing state's regulations equivalent to LAC 33:XV.322.D, or alternatively, furnish a copy of the general license contained in LAC 33:XV.322.D to each person to whom he or she directly or through an intermediate person transfers radioactive material in a device for use pursuant to the general license of the U.S. Nuclear Regulatory Commission, the agreement state, or the licensing state. If a copy of the general license in LAC 33:XV.322.D is furnished to such person, it shall be accompanied by a note explaining that the use of the device is regulated by the U.S. Nuclear Regulatory Commission, an agreement state, or a licensing state under requirements substantially the same as those in LAC 33:XV.322.D.

b. Report all transfers of devices to persons for use under the general license in LAC 33:XV.322.D.1 and all receipts of devices from persons licensed under LAC 33:XV.322.D.1 to the Office of Environmental Compliance, Emergency and Radiological Services Division. The report must be submitted on a quarterly basis on a RAD-41 Form or in a clear and legible report containing all of the data required by the form.

i. The required information for transfers to general licensees includes:

(a). the identity of each general licensee by name and mailing address for the location of use. If there is no mailing address for the location of use, an alternate address for the general licensee shall be submitted along with information on the actual location of use;

(b). the name, title, and telephone number of the person identified by the general licensee as having knowledge of and authority to take required actions to ensure compliance with the appropriate regulations and requirements;

(c). the date of transfer;

(d). the type, model number, and serial number of the device transferred; and

(e). the quantity and type of byproduct material contained in the device.

ii. If one or more intermediate persons will temporarily possess the device at the intended place of use before its possession by the user, the report must include the same information for both the intended user and each intermediate person, and clearly designate the intermediate persons.

iii. For devices received from a LAC 33:XV.322.D.1 general licensee, the report must include:

(a). the identity of the general licensee by name and address;

(b). the type, model number, and serial number of the device received;

(c). the date of receipt; and

(d). in the case of devices not initially transferred by the reporting licensee, the name of the manufacturer or initial transferor.

iv. If the licensee makes changes to a device possessed by a LAC 33:XV.322.D.1 general licensee, such that the label must be changed to update required information, the report must identify the general licensee, the device, and the changes to information on the device label.

v. The report must cover each calendar quarter, must be filed within 30 days of the end of the calendar quarter, and must clearly indicate the period covered by the report.

vi. The report must clearly identify the specific licensee submitting the report and include the license number of the specific licensee.

vii. If no transfers have been made to or from persons generally licensed under LAC 33:XV.322.D.1 during the reporting period, the report must so indicate.

c. Report all transfers of devices to persons for use under a general license in an agreement state's regulations that are equivalent to LAC 33:XV.322.D.1 and all receipts of devices from general licensees in the agreement state's jurisdiction to the responsible agreement state agency. The report must be submitted on a RAD-41 Form or in a clear and legible report containing all of the data required by the form.

i. The required information for transfers to general licensees includes:

(a). the identity of each general licensee by name and mailing address for the location of use. If there is no

mailing address for the location of use, an alternate address for the general licensee shall be submitted along with information on the actual location of use;

(b). the name, title, and phone number of the person identified by the general licensee as having knowledge of and authority to take required actions to ensure compliance with the appropriate regulations and requirements;

(c). the date of transfer;

(d). the type, model number, and serial number of the device transferred; and

(e). the quantity and type of byproduct material contained in the device.

ii. If one or more intermediate persons will temporarily possess the device at the intended place of use before its possession by the user, the report must include the same information for both the intended user and each intermediate person, and clearly designate the intermediate persons.

iii. For devices received from a general licensee, the report must include:

(a). the identity of the general licensee by name and address;

(b). the type, model number, and serial number of the device received;

(c). the date of receipt; and

(d). in the case of devices not initially transferred by the reporting licensee, the name of the manufacturer or initial transferor.

iv. If the licensee makes changes to a device possessed by a general licensee, such that the label must be changed to update required information, the report must identify the general licensee, the device, and the changes to information on the device label.

v. The report must cover each calendar quarter, must be filed within 30 days of the end of the calendar quarter, and must clearly indicate the period covered by the report.

vi. The report must clearly identify the specific licensee submitting the report and must include the license number of the specific licensee.

vii. If no transfers have been made to or from a particular agreement state during the reporting period, this information shall be reported to the responsible agreement state agency upon request of the agency.

d. Maintain all information concerning transfers and receipts of devices that supports the reports required by this Paragraph. This information and the reports must be maintained for a period of three years following the date of the recorded event.

e. Report to the Office of Environmental Compliance, Emergency and Radiological Services Division, all transfers of such devices to persons for use under the general license in LAC 33:XV.322.D. Such reports must be maintained for a period of three years following the date of the recorded event and shall identify each general licensee by name and address, an individual by name and/or position who may constitute a point of contact between the department and the general licensee, the type and model number of device transferred, and the quantity and type of radioactive material contained in the device. If one or more intermediate persons will temporarily possess the device at the intended place of use prior to its possession by the user, the report shall include identification of each intermediate person by name, address, contact, and relationship to the intended user. If no transfers have been made to persons generally licensed under LAC 33:XV.322.D during the reporting period, the report shall so indicate. The report shall cover each calendar quarter and shall be filed within 30 days thereafter.

f. For all transfers out of Louisiana, the distributor shall make reports prescribed in this Paragraph as follows.

i. Report to the U.S. Nuclear Regulatory Commission all transfers of such devices to persons for use under the U.S. Nuclear Regulatory Commission general license in 10 CFR 31.5.

ii. Report to the responsible state agency all transfers of devices manufactured and distributed in accordance with this Subsection for use under a general license in that state's regulations equivalent to LAC 33:XV.322.D.

iii. Such reports shall identify each general licensee by name and address, an individual by name and/or position who may constitute a point of contact between the agency and the general licensee, the type and model of the device transferred, and the quantity and type of radioactive material contained in the device. If one or more intermediate persons will temporarily possess the device at the intended place of use prior to its possession by the user, the report shall include identification of each intermediate person by name, address, contact, and relationship to the intended user. The report shall be submitted within 30 days after the end of each calendar quarter in which such device is transferred to the person generally licensed.

iv. If no transfers have been made to the U.S. Nuclear Regulatory Commission's licensees during the reporting period, this information shall be reported to the U.S. Nuclear Regulatory Commission.

v. If no transfers have been made to persons generally licensed within a particular state during the reporting period, this information shall be reported to the responsible state agency upon request of the agency.

g. Keep records showing the name, address, and the point of contact for each general licensee to whom he or she directly or through an intermediate person transfers radioactive material in devices for use pursuant to the general license provided in LAC 33:XV.322.D, or equivalent regulations of the U.S. Nuclear Regulatory Commission or

any other agreement state or licensing state. The records must show the date of each transfer, the isotope and the quantity of radioactive material in each device transferred, the identity of any intermediate person, and compliance with the reporting requirements of this Paragraph.

E. Special Requirements for the Manufacture, Assembly, or Repair of Luminous Safety Devices for Use in Aircraft

1. An application for a specific license to manufacture, assemble, or repair luminous safety devices containing tritium or promethium-147 for use in aircraft, for distribution to persons generally licensed under LAC 33:XV.322.E, will be approved subject to the following conditions:

a. the applicant satisfies the general requirements specified in LAC 33:XV.325; and

b. the applicant satisfies the requirements of 10 CFR 32.53, 32.54, 32.55, 32.56, and 32.101 or their equivalent.

F. Special Requirements for License to Manufacture Calibration and Reference Sources Containing Americium-241, Plutonium, or Radium-226 for Distribution to Persons Generally Licensed under LAC 33:XV.322.G

1. An application for a specific license to manufacture calibration and reference sources containing americium-241, plutonium, or radium-226 to persons generally licensed under LAC 33:XV.322.G will be approved subject to the following conditions:

a. the applicant satisfies the general requirement of LAC 33:XV.325; and

b. the applicant satisfies the requirements of 10 CFR 32.57, 32.58, 32.59, 32.102, and 70.39 or their equivalent.

G. Reserved.

H. Licensing the Manufacture and Distribution of Radioactive Material for Certain In Vitro Clinical or Laboratory Testing under a General License

1. An application for a specific license to manufacture or distribute radioactive material for use under an appropriate general license or equivalent will be approved subject to the following conditions:

a. the applicant satisfies the general requirements specified in LAC 33:XV.325;

b. the radioactive material is to be prepared for distribution in prepackaged units of:

i. iodine-125 in units not exceeding 10 microcuries each;

ii. iodine-131 in units not exceeding 10 microcuries each;

iii. carbon-14 in units not exceeding 10 microcuries each;

iv. hydrogen-3 (tritium) in units not exceeding 50 microcuries each;

v. iron-59 in units not exceeding 20 microcuries each;

vi. cobalt-57 in units not exceeding 10 microcuries each;

vii. selenium-75 in units not exceeding 10 microcuries each; or

viii. mock iodine-125 in units not exceeding 0.05 microcurie of iodine-129 and 0.005 microcurie of americium-241 each.

c. Each prepackaged unit bears a durable, clearly visible label:

i. identifying the radioactive contents as to chemical form and radionuclide, and indicating that the amount of radioactivity does not exceed 10 microcuries of iodine-125, iodine-131, carbon-14, cobalt-57, or selenium-75; 50 microcuries of hydrogen-3 (tritium); 20 microcuries of iron-59; or mock iodine-125 in units not exceeding 0.05 microcurie of iodine-129 and 0.005 microcurie of americium-241 each; and

ii. displaying the radiation symbol described in LAC 33:XV.450.A and the words, "CAUTION, RADIOACTIVE MATERIAL," and "Not for Internal or External Use in Humans or Animals".

d. One of the following statements, as appropriate, or a substantially similar statement that contains the information called for in one of the following statements, appears on a label affixed to each prepackaged unit or appears in a leaflet or brochure that accompanies the package:

i. This radioactive material may be received, acquired, possessed, and used only by physicians, clinical laboratories, or hospitals and only for in vitro clinical or laboratory tests not involving internal or external administration of the material, or the radiation therefrom, to human beings or animals. Its receipt, acquisition, possession, use, and transfer are subject to the regulations and a general license, or equivalent license, of the U.S. Nuclear Regulatory Commission or of a state with which the commission has entered into an agreement for the exercise of regulatory authority.

_____
(Name of Manufacturer)

ii. This radioactive material may be received, acquired, possessed, and used only by physicians, clinical laboratories, or hospitals and only for in vitro clinical or laboratory tests not involving internal or external administration of the material, or the radiation therefrom, to human beings or animals. Its receipt, acquisition, possession, use, and transfer are subject to the regulations and a general license, or equivalent license, of a licensing state.

_____
(Name of Manufacturer)

2. The label affixed to the unit, or the leaflet or brochure that accompanies the package, contains adequate information as to the precautions to be observed in handling and storing such radioactive material. In the case of the mock iodine-125 reference or calibration source, the

information accompanying the source must also contain directions to the licensee regarding the waste disposal requirements set out in LAC 33:XV.431.

I. Licensing the Manufacture and Distribution of Ice-Detection Devices

1. An application for a specific license to manufacture and distribute ice-detection devices to persons generally licensed under LAC 33:XV.322.J will be approved subject to the following conditions:

a. the applicant satisfies the general requirements of LAC 33:XV.325; and

b. the criteria of 10 CFR 32.61, 32.62, and 32.103 are met.

J. Manufacture, Preparation, or Transfer for Commercial Distribution of Radioactive Drugs for Medical Use under LAC 33:XV.Chapter 7

1. An application for a specific license to manufacture, prepare, or transfer for commercial distribution radioactive drugs for use by persons authorized in accordance with LAC 33:XV.Chapter 7 shall be approved if the following conditions are met:

a. the applicant satisfies the general requirements for the issuance of specific licenses specified in LAC 33:XV.325;

b. the applicant submits to the Office of Environmental Compliance, Emergency and Radiological Services Division, evidence that the applicant is at least one of the following:

i. registered or licensed with the U.S. Food and Drug Administration (FDA) as a drug manufacturer;

ii. registered or licensed with a state agency as a drug manufacturer;

iii. licensed as a pharmacy by the Louisiana Board of Pharmacy; or

iv. operating as a nuclear pharmacy within a federal medical institution;

c. the applicant submits to the Office of Environmental Compliance, Emergency and Radiological Services Division, information on the radionuclide, chemical and physical form, packaging including maximum activity per package, and shielding provided by the radioactive material that is appropriate for safe handling and storage of radiopharmaceuticals by group licensees; and

d. the labeling meets the following criteria:

i. the label is affixed to each transport radiation shield, whether it is constructed of lead, glass, plastic, or other material, of a radioactive drug to be transferred for commercial distribution. The label shall include the radiation symbol and the words "CAUTION, RADIOACTIVE MATERIAL" OR "DANGER, RADIOACTIVE MATERIAL," the name of the radioactive drug or its abbreviation, and the quantity of radioactivity at a specified date and time. For radioactive drugs with a half life greater than 100 days, the time may be omitted;

ii. a label is affixed to each syringe, vial, or other container used to hold a radioactive drug to be transferred for commercial distribution. The label shall include the radiation symbol and the words "CAUTION, RADIOACTIVE MATERIAL" OR "DANGER, RADIOACTIVE MATERIAL" and an identifier that ensures that the syringe, vial, or other container can be correlated with the information on the transport radiation shield label; and

iii. the labels, leaflets, or brochures required by this Section are in addition to the labeling required by the U.S. Food and Drug Administration (FDA), and they may be separate from or, with the approval of the FDA, may be combined with the labeling required by the FDA.

2. A licensee described by Clause J.1.b.iii or iv of this Section:

a. may prepare radioactive drugs for *medical use*, as defined in LAC 33:XV.102, provided that the radioactive drug is prepared by either an authorized nuclear pharmacist, as specified in Subparagraphs J.2.b and c of this Section, or an individual under the supervision of an authorized nuclear pharmacist as specified in LAC 33:XV.709;

b. may allow a pharmacist to work as an authorized nuclear pharmacist if:

i. this individual qualifies as an *authorized nuclear pharmacist* as defined in LAC 33:XV.102;

ii. this individual meets the requirements specified in LAC 33:XV.763.J and K.2 and the licensee has received an approved license amendment identifying this individual as an authorized nuclear pharmacist; or

iii. this individual is designated as an authorized nuclear pharmacist in accordance with Subparagraph J.2.c of this Section;

c. may conduct the actions authorized in Subparagraphs J.2.a and b of this Section in spite of more restrictive language in license conditions;

d. may designate a *pharmacist* (as defined in LAC 33:XV.102) as an authorized nuclear pharmacist if the individual is identified as of December 2, 1994, as an *authorized user* on a nuclear pharmacy license issued by the department under these regulations; and

e. shall provide to the Office of Environmental Compliance, Emergency and Radiological Services Division, a copy of each individual's certification by the Board Of Pharmaceutical Specialties and the department, licensing state, Nuclear Regulatory Commission, or agreement state license or the permit issued by a licensee of broad scope and a copy of the state pharmacy licensure or registration, no later than 30 days after the date that the licensee allows the individual to work as an authorized nuclear pharmacist, in accordance with Clauses J.2.b.i and iii of this Section.

3. A licensee shall possess and use instrumentation to measure the radioactivity of radioactive drugs. The licensee shall have procedures for use of the instrumentation. The licensee shall measure, by direct measurement or by combination of measurements and calculations, the amount of radioactivity in dosages of alpha-emitting, beta-emitting, or photon-emitting radioactive drugs prior to transfer for commercial distribution. In addition, the licensee shall:

a. perform tests before initial use, periodically, and following repair on each instrument for accuracy, linearity, and geometry dependence, as appropriate for the use of the instrument, and make adjustments when necessary; and

b. check each instrument for constancy and proper operation at the beginning of each day of use.

4. Nothing in this Section relieves the licensee from complying with applicable FDA, other federal, and state requirements governing radioactive drugs.

K. License Requirements for the Manufacture, Preparation, or Transfer for Commercial Distribution of Capsules Containing Carbon-14 Urea for "In Vivo" Diagnostic Use in Humans

1. An application for a specific license to manufacture, prepare, process, produce, package, repackage, or transfer for commercial distribution capsules containing 37 kBq (1μCi) carbon-14 urea each (allowing for nominal variation that may occur during the manufacturing process) for "in vivo" diagnostic use, to persons exempt from licensing under LAC 33:XV.304.C.5 will be approved if:

a. the applicant satisfies the general requirements specified in LAC 33:XV.325;

b. the applicant meets the requirements under Subparagraph J.1.b of this Section;

c. the applicant provides evidence that each capsule contains 37 kBq (1μCi) carbon-14 urea (allowing for nominal variation that may occur during the manufacturing process);

d. the carbon-14 urea is not contained in any food, beverage, cosmetic, drug (except as described in this Section), or other commodity designed for ingestion or inhalation by, or topical application to, a human being;

e. the carbon-14 urea is in the form of a capsule, is identified as radioactive, and is to be used for its radioactive properties, but is not incorporated into any manufactured or assembled commodity, product, or device intended for commercial distribution. The capsule shall meet the following conditions:

i. the immediate container of the capsule(s) bears a durable, legible label that:

(a). identifies the radioisotope, the physical and chemical form, and the quantity of radioactivity of each capsule at a specific date; and

(b). bears the words "Radioactive Material";

ii. in addition to the labeling information required by Clause K.1.e.i of this Section, an accompanying brochure or the label affixed to the immediate container also:

(a). states that the contents are exempt from department licensing requirements; and

(b). bears the words "Radioactive Material. For "In Vivo" Diagnostic Use Only. This Material Is Not To Be Used for Research Involving Human Subjects and Shall Not Be Introduced into Foods, Beverages, Cosmetics, or Other Drugs or Medicinals or into Products Manufactured for Commercial Distribution. This Material May Be Disposed of in Ordinary Trash"; and

f. the applicant submits copies of prototype labels and brochures and the department approves these labels and brochures.

2. Nothing in this Section relieves the licensee from complying with applicable FDA, other federal, and state requirements governing drugs.

L. Licensing the Manufacture and Distribution of Sources or Devices Containing Radioactive Material for Medical Use

1. An application for a specific license to manufacture and distribute sources and devices containing radioactive material to persons licensed pursuant to Chapter 7 for use as a calibration or reference source or for the uses listed in LAC 33:XV.739 and 741 of these regulations will be approved if the following conditions are met.

a. The applicant satisfies the general requirements in LAC 33:XV.325.

b. The applicant submits to the Office of Environmental Compliance, Emergency and Radiological Services Division, sufficient information regarding each type of source or device pertinent to an evaluation of its radiation safety, including:

i. the radioactive material contained, its chemical and physical form, and the amount;

ii. details of design and construction of the source or device;

iii. procedures for, and results of, prototype tests to demonstrate that the source or device will maintain its integrity under stresses likely to be encountered in normal use;

iv. for devices containing radioactive material, the radiation profile of a prototype device;

v. details of quality control procedures to assure that production sources and devices meet the standards of the design and prototype tests;

vi. procedures and standards for calibrating sources and devices;

vii. legend and methods for labeling sources and devices as to their radioactive content; and

viii. instructions for handling and storing the source or device from the radiation safety standpoint; these instructions are to be included on a durable label attached to the source or device or attached to a permanent storage container for the source or device, provided that instructions which are too lengthy for such label may be summarized on the label and printed in detail on a brochure referenced on the label.

c. The label affixed to the source or device, or to the permanent storage container for the source or device, contains information on the radionuclide, quantity, date of assay, and a statement that the source or device is licensed by the administrative authority for distribution to persons licensed pursuant to Chapter 7 and LAC 33:XV.739 and 741, or under equivalent licenses of the U.S. Nuclear Regulatory Commission, any other agreement state, or a licensing state, provided that such labeling for sources that do not require long-term storage (e.g., gold-198 seeds) may be on a leaflet or brochure that accompanies the source.

2. Intervals for Leakage Tests

a. In the event the applicant desires that the source or device be required to be tested for leakage of radioactive material at intervals longer than six months, he or she shall include in the application sufficient information to demonstrate that such longer interval is justified by performance characteristics of the source or device or similar sources or devices and by design features that have a significant bearing on the probability or consequences of leakage of radioactive material from the source.

b. In determining the acceptance interval for tests of leakage of radioactive material, the department will consider information that includes, but is not limited to:

i. primary containment (source capsule);

ii. protection of primary containment;

iii. method of sealing containment;

iv. containment construction materials;

v. form of contained radioactive material;

vi. maximum temperature withstood during prototype tests;

vii. maximum pressure withstood during prototype tests;

viii. maximum quantity of contained radioactive material;

ix. radiotoxicity of contained radioactive material; and

x. operating experience with identical sources or devices or similarly designed and constructed sources or devices.

M. Requirements for License to Manufacture and Distribute Industrial Products Containing Depleted Uranium for Mass-Volume Applications

1. An application for a specific license to manufacture industrial products and devices containing depleted uranium for use pursuant to LAC 33:XV.321.E or equivalent regulations of the U.S. Nuclear Regulatory Commission or an agreement state will be approved if the following conditions are met:

a. the applicant satisfies the general requirements in LAC 33:XV.325;

b. the applicant submits to the Office of Environmental Compliance, Emergency and Radiological Services Division, sufficient information relating to the design, manufacture, prototype testing, quality control procedures, labeling or marking, proposed uses, and potential hazards of the industrial product or device to provide reasonable assurance that possession, use, or transfer of the depleted uranium in the product or device is not likely to cause any individual to receive in any period of one calendar quarter a radiation dose in excess of 10 percent of the limits specified in LAC 33:XV.410.A; and

c. the applicant submits to the Office of Environmental Compliance, Emergency and Radiological Services Division, sufficient information regarding the industrial product or device and the presence of depleted uranium for a mass-volume application in the product or device to provide reasonable assurance that unique benefits will accrue to the public because of the usefulness of the product or device.

2. In the case of an industrial product or device whose unique benefits are questionable, the administrative authority will approve an application for a specific license under LAC 33:XV.328.M only if the product or device is found to combine a high degree of utility and low probability of uncontrolled disposal and dispersal of significant quantities of depleted uranium into the environment.

3. The administrative authority may deny any application for a specific license under LAC 33:XV.328.M if the end use(s) of the industrial product or device cannot be reasonably foreseen.

4. Each person licensed pursuant to LAC 33:XV.328.M.1 shall do the following:

a. maintain the level of quality control required by the license in the manufacture of the industrial product or device, and in the installation of the depleted uranium into the product or device;

b. label or mark each unit to:

i. identify the manufacturer of the product or device and the number of the license under which the product or device was manufactured, the fact that the product or device contains depleted uranium, and the quantity of depleted uranium in each product or device; and

ii. state that the receipt, possession, use, and transfer of the product or device are subject to a general license or the equivalent and the regulations of the U.S. Nuclear Regulatory Commission or of an agreement state;

c. assure that the depleted uranium before being installed in each product or device has been impressed with the following legend clearly legible through any plating or other covering: "Depleted Uranium;"

d. furnish the following:

i. furnish a copy of the general license contained in LAC 33:XV.321.E and a copy of the Form DRC-21 to each person to whom the licensee transfers depleted uranium in a product or device for use pursuant to the general license contained in LAC 33:XV.321.E; or

ii. furnish a copy of the general license contained in the U.S. Nuclear Regulatory Commission's or agreement state's regulation equivalent to LAC 33:XV.321.E and a copy of the U.S. Nuclear Regulatory Commission's or agreement state's certificate, or alternatively, furnish a copy of the general license contained in LAC 33:XV.321.E and a copy of Form DRC-21 to each person to whom the licensee transfers depleted uranium in a product or device for use pursuant to the general license of the U.S. Nuclear Regulatory Commission or an agreement state, with a note explaining that use of the product or device is regulated by the U.S. Nuclear Regulatory Commission or an agreement state under requirements substantially the same as those in LAC 33:XV.321.E;

e. report to the Office of Environmental Compliance, Emergency and Radiological Services Division, all transfers of industrial products or devices to persons for use under the general license in LAC 33:XV.321.E. Such report shall identify each general licensee by name and address, an individual by name and/or position who may constitute a point of contact between the department and the general licensee, the type and model number of device transferred, and the quantity of depleted uranium contained in the product or device. The report shall be submitted within 30 days after the end of each calendar quarter in which such a product or device is transferred to the generally licensed person. If no transfers have been made to persons generally licensed under LAC 33:XV.321.E during the reporting period, the report shall so indicate;

f. report the following information:

i. report to the U.S. Nuclear Regulatory Commission all transfers of industrial products or devices to persons for use under the U.S. Nuclear Regulatory Commission general license in 10 CFR 40.25;

ii. report to the responsible state agency all transfers of devices manufactured and distributed pursuant to LAC 33:XV.328.M for use under a general license in that state's regulations equivalent to LAC 33:XV.321.E;

iii. such report shall identify each general licensee by name and address, an individual by name and/or position who may constitute a point of contact between the agency and the general licensee, the type and model number of the device transferred, and the quantity of depleted uranium contained in the product or device. The report shall be submitted within 30 calendar days after the end of each calendar quarter in which such product or device is transferred to the generally license person;

iv. if no transfers have been made to the U.S. Nuclear Regulatory Commission licensees during the reporting period, this information shall be reported to the U.S. Nuclear Regulatory Commission;

v. if no transfers have been made to general licensees within a particular agreement state during the reporting period, this information shall be reported to the responsible agreement state agency;

g. keep records showing the name, address, and point of contact for each general licensee to whom he or she transfers depleted uranium in industrial products or devices for use pursuant to the general license provided in LAC 33:XV.321.E or equivalent regulations of the U.S. Nuclear Regulatory Commission or of any other agreement state. The records shall be maintained for a period of two consecutive years and shall show the date of each transfer, the quantity of depleted uranium in each product or device transferred, and compliance with the report requirements of this Section.

AUTHORITY NOTE: Promulgated in accordance with R.S. 30:2001 et seq.

HISTORICAL NOTE: Promulgated by the Department of Environmental Quality, Nuclear Energy Division, LR 13:569 (October 1987), amended by the Office of Air Quality and Radiation Protection, Radiation Protection Division, LR 18:34 (January 1992), LR 24:2092 (November 1998), amended by the Office of Environmental Assessment, Environmental Planning Division, LR 26:2569 (November 2000), LR 26:2768 (December 2000), LR 27:1228 (August 2001), LR 30:1664 (August 2004), amended by the Office of the Secretary, Legal Affairs Division, LR 31:2526 (October 2005).

§330. Issuance of Specific Licenses

A. Upon a determination that an application meets the requirements of the act and these regulations, the administrative authority will issue a specific license authorizing the proposed activity in such form and containing such conditions and limitations as he or she deems appropriate or necessary.

B. The administrative authority may incorporate in any license at the time of issuance, or thereafter by appropriate rule, regulation, or order, such additional requirements and conditions with respect to the licensee's receipt, possession, use, and transfer of radioactive material subject to this Chapter as he or she deems appropriate or necessary in order to:

1. minimize danger to public welfare and safety or property; and

2. prevent loss or theft of radioactive material subject to this Chapter.

C. The administrative authority may require such reports and the keeping of such records and may provide for such inspections of activities under the license as is appropriate or necessary.

AUTHORITY NOTE: Promulgated in accordance with R.S. 30:2001 et seq.

HISTORICAL NOTE: Promulgated by the Department of Environmental Quality, Nuclear Energy Division, LR 13:569 (October 1987), amended by the Office of Air Quality and Radiation Protection, Radiation Protection Division, LR 18:34 (January 1992).

§331. Specific Terms and Conditions of Licenses

A. Each license issued pursuant to this Chapter shall be subject to all the provisions of the act, now or hereafter in effect, and to all rules, regulations, and orders of the administrative authority.

B. No license issued or granted under this Chapter and no right to possess or utilize radioactive material granted by any license issued pursuant to this Chapter shall be transferred, assigned, or in any manner disposed of, either voluntarily or involuntarily, directly or indirectly, through transfer of control of any license to any person unless the department shall, after securing full information, find that the transfer is in accordance with the provisions of the act, now or hereafter in effect, and with all valid rules, regulations, and orders of the department, and shall give its consent in writing.

C. Each person licensed by the administrative authority pursuant to this Chapter shall confine his or her use and possession of the material licensed to the locations and purposes authorized in the license.

D. Each licensee shall notify the Office of Environmental Compliance, Emergency and Radiological Services Division, in writing when the licensee decides to permanently discontinue all activities involving materials authorized under the license. This notification requirement applies to all specific licenses issued under this Chapter.

E. Each licensee shall notify the Office of Environmental Compliance, Emergency and Radiological Services Division, in writing, immediately following the filing of a voluntary or involuntary petition for bankruptcy under any Chapter of Title 11 (Bankruptcy) of the *United States Code* by or against:

1. the licensee;

2. an entity controlling the licensee or listing the license or licensee as property of the estate; or

3. an affiliate of the licensee.

F. The notification specified in LAC 33:XV.331.E shall indicate the bankruptcy court in which the petition for bankruptcy was filed and the date of the filing of the petition.

AUTHORITY NOTE: Promulgated in accordance with R.S. 30:2001 et seq.

HISTORICAL NOTE: Promulgated by the Department of Environmental Quality, Nuclear Energy Division, LR 13:569 (October 1987), amended by the Office of Air Quality and Radiation Protection, Radiation Protection Division, LR 18:34 (January 1992), amended by the Office of Environmental Assessment, Environmental Planning Division, LR 26:2571 (November 2000), amended by the Office of the Secretary, Legal Affairs Division, LR 31:2527 (October 2005).

§332. Expiration and Termination of Licenses and Decommissioning of Sites and Separate Buildings or Outdoor Areas

A. Except as provided in LAC 33:XV.333.B, each specific license shall expire at the end of the specified day in the month and year stated therein.

B. Each licensee shall notify the Office of Environmental Compliance, Emergency and Radiological Services Division, immediately, in writing, and request termination of the license when the licensee decides to terminate all activities involving radioactive material authorized under the license. This notification and request for termination of the license must include the reports and information specified in Subparagraph D.1.e of this Section.

C. No less than 30 calendar days before the expiration date specified in the license, the licensee shall either:

1. submit an application for license renewal under LAC 33:XV.333; or

2. notify the Office of Environmental Compliance, Emergency and Radiological Services Division, in writing, if the licensee decides not to renew the license.

D. Expiration of License and Decommissioning

1. If a licensee does not submit an application for license renewal under LAC 33:XV.333, the licensee shall, on or before the expiration date specified in the license:

a. terminate use of radioactive material;

b. remove radioactive contamination to the extent practicable;

c. properly dispose of radioactive material;

d. submit a completed form to the Office of Environmental Compliance, Emergency and Radiological Services Division, that certifies information concerning the disposition of materials; and

e. submit a radiation survey report to the Office of Environmental Compliance, Emergency and Radiological Services Division, to confirm the absence of radioactive material or to establish the levels of residual radioactive contamination, unless the licensee demonstrates the absence of residual radioactive contamination in some other manner. The licensee shall, as appropriate:

i. report levels of radiation in units of milliroentgens per hour of beta and gamma radiation at 1 centimeter and gamma radiation at 1 meter from surfaces and report levels of radioactivity, including alpha, in units of transformations per minute (or microcuries) per 100 square centimeters removable and fixed on surfaces, microcuries per milliliter in water, and picocuries per gram in contaminated solids such as soils or concrete;

ii. specify the instrumentation used and certify that each instrument was properly calibrated and tested; and

iii. consider a site to be acceptable for unrestricted use if the residual radioactivity that is distinguishable from

background radiation results in a TEDE to an average member of the critical group that does not exceed 25 mrem (0.25 mSv) per year, including that from groundwater sources of drinking water, and the residual radioactivity has been reduced to levels that are as low as reasonably achievable (ALARA). Determination of the levels that are ALARA must take into account consideration of any detriments, such as deaths from transportation accidents, expected to potentially result from decontamination and waste disposal.

2. Plan for Completion of Decommissioning

a. In addition to the information required under Subparagraphs D.1.d and e of this Section, the licensee shall submit a plan for completion of decommissioning, if required by the license condition or if the procedures necessary to carry out decommissioning of the site or separate building or outdoor area have not been previously approved by the department and could increase potential health and safety impacts to workers or to the public such as in any of the following cases.

i. Procedures would involve techniques not applied routinely during cleanup or maintenance operations.

ii. Workers would be entering areas not normally occupied where surface contamination and radiation levels are significantly higher than routinely encountered during operation.

iii. Procedures could result in significantly greater airborne concentrations of radioactive materials than are present during operation.

iv. Procedures could result in significantly greater releases of radioactive material to the environment than those associated with operation.

b. Procedures with potential health and safety impacts may not be carried out prior to approval of the decommissioning plan.

c. The proposed decommissioning plan must include:

i. a description of planned decommissioning activities;

ii. a description of methods to be used to assure protection of workers and the environment against radiation hazards during decommissioning;

iii. a description of the planned final radiation survey;

iv. an updated detailed cost estimate for decommissioning, comparison of that estimate with present funds set aside for decommissioning, and plan for assuring the availability of adequate funds for completion of decommissioning;

v. a description of the conditions of the site or separate building or outdoor area sufficient to evaluate the acceptability of the plan; and

vi. for decommissioning plans calling for completion of decommissioning later than 24 months after plan approval, a justification for the delay based on the criteria in Clause D.2.c.v of this Section.

d. The proposed decommissioning plan will be approved by the department if the information therein demonstrates that the decommissioning will be completed as soon as is reasonable and that the health and safety of workers and the public will be adequately protected.

3. Upon approval of the decommissioning plan by the department, the licensee shall complete decommissioning in accordance with the approved plan. As a final step in decommissioning, the licensee shall again submit the information required in LAC 33:XV.332.D.1.e and shall certify the disposition of accumulated wastes from decommissioning.

4. If no residual radioactive contamination attributable to activities conducted under the license is detected, the licensee shall submit a certification that no detectable radioactive contamination was found. The department will notify the licensee, in writing, of the termination of the license.

5. The following applies if detectable levels of residual radioactive contamination attributable to activities conducted under the license are found.

a. If detectable levels of residual radioactive contamination attributable to activities conducted under the license are found, the license continues in effect beyond the expiration date, if necessary, with respect to possession of residual radioactive material present as contamination until the department notifies the licensee in writing that the license is terminated. During this time the licensee is subject to the provisions of LAC 33:XV.332.E.

b. In addition to the information submitted under LAC 33:XV.332.D.1.e, the licensee shall submit a plan for decontamination, if required, as regards residual radioactive contamination remaining at the time the license expires.

c. Specific licenses, including expired licenses, will be terminated by written notice to the licensee when the department determines that:

i. byproduct material has been properly disposed;

ii. reasonable effort has been made to eliminate residual radioactive contamination, if present; and

(a). a radiation survey has been performed which demonstrates that the premises are suitable for release for unrestricted use; or

(b). other information submitted by the licensee is sufficient to demonstrate that the premises are suitable for release for unrestricted use.

6. Timeliness of Decommissioning

a. Within 60 days of the occurrence of any of the following, each licensee shall provide notification to the Office of Environmental Compliance, Emergency and

Radiological Services Division, in writing of such occurrence and either begin decommissioning its site, or any separate building or outdoor area that contains residual radioactivity, so that the building or outdoor area is suitable for release for unrestricted use, or submit within 12 months of notification a decommissioning plan, if required by Paragraph D.2 of this Section, and begin decommissioning upon approval of that plan if:

i. the license has expired in accordance with Subsection A of this Section;

ii. the licensee has decided to permanently cease *principal activities*, as defined in LAC 33:XV.102, at the entire site or in any separate building or outdoor area that contains residual radioactivity such that the building or outdoor area is unsuitable for release for unrestricted use;

iii. no principal activities under the license have been conducted for a period of 24 months; or

iv. no principal activities have been conducted for a period of 24 months in any separate building or outdoor area that contains residual radioactivity such that the building or outdoor area is unsuitable for release for unrestricted use.

b. Coincident with the notification required by Subparagraph D.6.a of this Section, the licensee shall maintain in effect all decommissioning financial assurances established by the licensee in accordance with LAC 33:XV.351 in conjunction with a license issuance or renewal or as required by this Section. The amount of the financial assurance shall be increased or may be decreased, as appropriate, to cover the detailed cost estimate for decommissioning established in accordance with Clause D.2.c.iv of this Section.

i. Any licensee who has not provided financial assurance to cover the detailed cost estimate submitted with the decommissioning plan shall do so when this rule becomes effective.

ii. Following approval of the decommissioning plan, a licensee may reduce the amount of the financial assurance as decommissioning proceeds and radiological contamination is reduced at the site with the approval of the department.

c. The department may grant a request to extend the time periods established in Subparagraph D.6.a of this Section if the department determines that this relief is not detrimental to the public health and safety and is otherwise in the public interest. The request shall be submitted no later than 30 days before notification in accordance with Subparagraph D.6.a of this Section. The schedule for decommissioning set forth in Subparagraph D.6.a of this Section may not commence until the department has made a determination on the request.

d. The department may approve an alternative schedule for submittal of a decommissioning plan required in accordance with Subparagraph D.6.a of this Section if the department determines that the alternative schedule is necessary to the effective conduct of decommissioning operations and presents no undue risk from radiation to the public health and safety and is otherwise in the public interest.

e. Decommissioning Time Limit

i. Except as provided in Clause D.6.e.iii of this Section, licensees shall complete decommissioning of the site or separate building or outdoor area as soon as practicable, but no later than 24 months following the initiation of decommissioning.

ii. Except as provided in Clause D.6.e.iii of this Section, when decommissioning involves the entire site, the licensee shall request license termination as soon as practicable, but no later than 24 months following the initiation of decommissioning.

iii. The department may approve a request for an alternative schedule for completion of decommissioning of the site or separate building or outdoor area and license termination, if appropriate, if the department determines that the alternative is warranted by consideration of the following:

(a). whether it is technically feasible to complete decommissioning within the allotted 24-month period;

(b). whether sufficient waste disposal capacity is available to allow completion of decommissioning within the allotted 24-month period;

(c). whether a significant volume reduction in wastes requiring disposal will be achieved by allowing short-lived radionuclides to decay;

(d). whether a significant reduction in radiation exposure to workers can be achieved by allowing short-lived radionuclides to decay; and

(e). other site-specific factors that the department may consider appropriate on a case-by-case basis, such as the regulatory requirements of other government agencies, lawsuits, groundwater treatment activities, monitored natural groundwater restoration, actions that could result in more environmental harm than deferred cleanup, and other factors beyond the control of the licensee.

E. Each licensee who possesses residual radioactive material under LAC 33:XV.332.D.5, following the expiration date specified in the license shall:

1. limit actions involving radioactive material to those related to decontamination and other activities related to preparation for release for unrestricted use; and

2. continue to control entry to restricted areas until they are suitable for release for unrestricted use and the department notifies the licensee in writing that the license is terminated.

AUTHORITY NOTE: Promulgated in accordance with R.S. 30:2001 et seq.

HISTORICAL NOTE: Promulgated by the Department of Environmental Quality, Nuclear Energy Division, LR 13:569 (October 1987), amended by the Office of Air Quality and

Radiation Protection, Radiation Protection Division, LR 18:34 (January 1992), LR 24:2094 (November 1998), amended by the Office of Environmental Assessment, Environmental Planning Division, LR 26:2571 (November 2000), LR 26:2768 (December 2000), amended by the Office of the Secretary, Legal Affairs Division, LR 31:2527 (October 2005).

§333. Renewal of Licenses

A. Applications for renewal of specific licenses shall be filed in accordance with LAC 33:XV.324.

B. In any case in which a licensee, not less than 30 calendar days prior to expiration of his or her existing license, has filed an application in proper form for renewal or for a new license authorizing the same activities, such existing license shall not expire until the application has been finally determined by the department.

AUTHORITY NOTE: Promulgated in accordance with R.S. 30:2001 et seq.

HISTORICAL NOTE: Promulgated by the Department of Environmental Quality, Nuclear Energy Division, LR 13:569 (October 1987), amended by the Office of Air Quality and Radiation Protection, Radiation Protection Division, LR 18:34 (January 1992), amended by the Office of Environmental Assessment, Environmental Planning Division, LR 26:2572 (November 2000).

§334. Amendment of Licenses at Request of Licensee

A. Applications for amendment of a license shall be filed in accordance with LAC 33:XV.324 and shall specify the respects in which the licensee desires his or her license to be amended and the grounds for such amendment.

AUTHORITY NOTE: Promulgated in accordance with R.S. 30:2001 et seq.

HISTORICAL NOTE: Promulgated by the Department of Environmental Quality, Nuclear Energy Division, LR 13:569 (October 1987), amended by the Office of Air Quality and Radiation Protection, Radiation Protection Division, LR 18:34 (January 1992).

§335. Department Action on Applications to Renew or Amend

A. In considering an application by a licensee to renew or amend his or her license, the department will apply the criteria set forth in LAC 33:XV.325, 326, 327, and 328 and in Chapters 5, 7, 13, and 20 of these regulations as applicable.

AUTHORITY NOTE: Promulgated in accordance with R.S. 30:2001 et seq.

HISTORICAL NOTE: Promulgated by the Department of Environmental Quality, Nuclear Energy Division, LR 13:569 (October 1987), amended by the Office of Air Quality and Radiation Protection, Radiation Protection Division, LR 18:34 (January 1992), amended by the Office of Environmental Assessment, Environmental Planning Division, LR 26:2573 (November 2000).

§340. Transfer of Material

A. No licensee shall transfer radioactive material except as authorized pursuant to this Section.

B. Except as otherwise provided in the license and subject to the provisions of LAC 33:XV.340.C and D, any licensee may transfer radioactive material:

1. to the department (a licensee may transfer radioactive material to the department only after receiving prior approval from the department);

2. to the U.S. Department of Energy;

3. to any person exempt from the regulations in this Chapter to the extent permitted under such exemption;

4. to any person authorized to receive such material under terms of a general license or its equivalent, or a specific license or equivalent licensing document issued by the administrative authority, the U.S. Nuclear Regulatory Commission, any other agreement state, or any licensing state, or to any person otherwise authorized to receive such material by the federal government or any agency thereof, the administrative authority, any other agreement state, or any licensing state; or

5. as otherwise authorized by the department in writing.

C. Before transferring radioactive material to a specific licensee of the department, the U.S. Nuclear Regulatory Commission, another agreement state, or a licensing state, or to a general licensee who is required to register with the department, the U.S. Nuclear Regulatory Commission, any other agreement state, or a licensing state, prior to receipt of the radioactive material, the licensee transferring the material shall verify that the transferee's license authorizes the receipt of the type, form, and quantity of radioactive material to be transferred.

D. The following methods for the verification required by LAC 33:XV.340.C are acceptable.

1. The transferor may have in his or her possession, and shall read or have read, a current copy of the transferee's specific license or registration certificate.

2. The transferor may have in his or her possession a written certification by the transferee that he or she is authorized by license or registration certificate to receive the type, form, and quantity of radioactive material to be transferred, specifying the license or registration certificate number, issuing agency, and expiration date.

3. For emergency shipments, the transferor may accept oral certification by the transferee that he or she is authorized by license or registration certificate to receive the type, form, and quantity of radioactive material to be transferred, specifying the license or registration certificate number, issuing agency and expiration date, provided that the oral certification is confirmed in writing within 10 days.

4. The transferor may obtain other sources of information compiled by a reporting service from official records of the department, the U.S. Nuclear Regulatory Commission, or the licensing agency of any other agreement state, or licensing state as to the identity of licensees and the scope and expiration dates of licenses and registration.

5. When none of the methods of verification described in LAC 33:XV.340.D.1-4 are readily available or when a transferor desires to verify that information received by one of such methods is correct or up-to-date, the transferor may obtain and record confirmation from the department, the U.S. Nuclear Regulatory Commission, or the licensing agency of any other agreement state or licensing state that the transferee is licensed to receive the radioactive material.

E. Preparation for shipment and transport of radioactive material shall be in accordance with the provisions of Chapter 15 of these regulations.

AUTHORITY NOTE: Promulgated in accordance with R.S. 30:2001 et seq.

HISTORICAL NOTE: Promulgated by the Department of Environmental Quality, Nuclear Energy Division, LR 13:569 (October 1987), amended by the Office of Air Quality and Radiation Protection, Radiation Protection Division, LR 18:34 (January 1992), amended by the Office of Environmental Assessment, Environmental Planning Division, LR 26:2573 (November 2000).

§341. Reporting Requirements for General and Specific Licenses

A. Immediate Report. Each licensee shall notify the Office of Environmental Compliance by telephone at (225) 765-0160 in the manner provided in LAC 33:I.3923 as soon as possible but not later than four hours after the discovery of an event that prevents immediate protective actions necessary to avoid exposures to radiation or radioactive materials that could exceed regulatory limits or releases of licensed material that could exceed regulatory limits (events may include fires, explosions, toxic gas releases, etc.).

B. Twenty-Four Hour Report. Each licensee shall notify the Office of Environmental Compliance by telephone at (225) 765-0160 in the manner provided in LAC 33:I.3923 within 24 hours after the discovery of any of the following events involving licensed material:

1. an unplanned contamination event that:

a. requires access to the contaminated area, by workers or the public, to be restricted for more than 24 hours by imposing additional radiological controls or by prohibiting entry into the area;

b. involves a quantity of material greater than five times the lowest annual limit on intake specified in LAC 33:XV.499.Appendix B, for the material; and

c. requires access to the area to be restricted for a reason other than to allow isotopes with a half-life of less than 24 hours to decay prior to decontamination;

2. an event in which equipment is disabled or fails to function as designed when:

a. the equipment is required by regulation or license condition to prevent releases exceeding regulatory limits, to prevent exposures to radiation and radioactive materials exceeding regulatory limits, or to mitigate the consequences of an accident;

b. the equipment is required to be available and operable when it is disabled or fails to function; and

c. no redundant equipment is available and operable to perform the required safety function;

3. an event that requires unplanned medical treatment at a medical facility of an individual with spreadable radioactive contamination on the individual's clothing or body; or

4. an unplanned fire or explosion damaging any licensed material or any device, container, or equipment containing licensed material when:

a. the quantity of material involved is greater than five times the lowest annual limit on intake specified in LAC 33:XV.499.Appendix B, for the material; and

b. the damage affects the integrity of the licensed material or its container.

C. Preparation and Submission of Reports. Reports made by licensees in response to the requirements of LAC 33:XV.341 must be made as follows.

1. Licensees shall make reports required by LAC 33:XV.341.A and B to the Office of Environmental Compliance by telephone at (225) 765-0160 in the manner provided in LAC 33:I.3923. To the extent that the information is available at the time of notification, the information provided in these reports must include:

a. the caller's name and call-back telephone number;

b. a description of the event, including date and time;

c. the exact location of the event;

d. the isotopes, quantities, and chemical and physical form of the licensed material involved; and

e. any personnel radiation exposure data available.

2. Each licensee who makes a report required by LAC 33:XV.341.A or B shall submit a written follow-up report within 30 days of the initial report to the Office of Environmental Compliance by using the procedures provided in LAC 33:I.3925.B and C. Written reports prepared pursuant to other regulations may be submitted to fulfill this requirement if the reports contain all of the necessary information and the appropriate distribution is made. These written reports must be sent to the department. The reports must include the following:

a. a description of the event, including the probable cause and the manufacturer and model number (if applicable) of any equipment that failed or malfunctioned;

b. the exact location of the event;

c. the isotopes, quantities, and chemical and physical form of the licensed material involved;

d. date and time of the event;

e. corrective actions taken or planned and the results of any evaluations or assessments; and

f. the extent of exposure of individuals to radiation or to radioactive materials without identification of individuals by name.

AUTHORITY NOTE: Promulgated in accordance with R.S. 30:2001 et seq.

HISTORICAL NOTE: Promulgated by the Department of Environmental Quality, Office of Air Quality and Radiation Protection, Radiation Protection Division, LR 21:554 (June 1995), amended by the Office of Environmental Assessment, Environmental Planning Division, LR 26:2573 (November 2000), LR 30:1678 (August 2004).

§342. Records

A. If licensed activities are transferred or assigned in accordance with LAC 33:XV.331.B, each licensee authorized to possess radioactive material, with a half-life greater than 120 days, in an unsealed form, shall transfer the following records to the new licensee, and the new licensee will be responsible for maintaining these records until the license is terminated:

1. records of disposal of licensed material made under LAC 33:XV.461, 462, 463, and 464; and

2. records required by LAC 33:XV.472.B.4.

AUTHORITY NOTE: Promulgated in accordance with R.S. 30:2001 et seq.

HISTORICAL NOTE: Promulgated by the Department of Environmental Quality, Office of Environmental Assessment, Environmental Planning Division, LR 26:1018 (May 2000).

§350. Modification and Revocation of Licenses

A. The terms and conditions of all licenses shall be subject to amendment, revision, or modification, or the license may be suspended or revoked by reason of amendments to the act or by reason of rules, regulations, and orders issued by the administrative authority.

B. Any license may be revoked, suspended, or modified, in whole or in part, for any material false statement in the application or any statement of fact required under provisions of the act or because of conditions revealed by such application or statement of fact or any report, record, or inspection or other means that would warrant the administrative authority to refuse to grant a license on an original application, or for violation of, or failure to observe, any of the terms and conditions of the act, or of the license, or of any rule, regulation, or order of the administrative authority. Whether a false statement is material shall be determined by the administrative authority.

C. Except in cases of willfulness or those in which the public welfare, interest, or safety requires otherwise, no license shall be modified, suspended, or revoked unless, prior to the institution of proceedings therefore, facts or conduct that may warrant such action shall have been called to the attention of the licensee in writing, and the licensee shall have been accorded an opportunity to demonstrate or achieve compliance with all lawful requirements.

AUTHORITY NOTE: Promulgated in accordance with R.S. 30:2001 et seq.

HISTORICAL NOTE: Promulgated by the Department of Environmental Quality, Nuclear Energy Division, LR 13:569 (October 1987), amended by the Office of Air Quality and Radiation Protection, Radiation Protection Division, LR 18:34 (January 1992).

§351. Financial Assurance Arrangements

A. Issuance of a license shall be dependent upon satisfactory evidence of financial assurance to ensure the protection of the public health and safety in the event of abandonment, default, or other inability of the licensee to meet the requirements of these regulations. Pursuant to R.S. 30:2114 of the Louisiana Radiation Protection and Radiation Control Law, and as otherwise provided, financial assurance arrangements for site decontamination, mitigation, liability, and/or decommissioning may consist of financial assurance bonds, cash deposits, personal bonds, letters or lines of credit, or any combination of the above for the categories of licenses listed in LAC 33:XV.351.D. Determination of satisfactory financial assurance arrangements shall be subject to the following conditions:

1. the amount of funds to be ensured by such assurance arrangements shall be based on the quantity of radioactive material of half-life greater than 120 days that the licensee is authorized to use and possess;

2. self-insurance, or any arrangement that essentially constitutes self-insurance, will not satisfy the financial assurance requirement since this provides no further assurance than being without insurance.

B. The arrangements required in LAC 33:XV.351.A shall be established prior to issuance of the license to assure that sufficient funds will be available to carry out the decontamination and decommissioning of the facility.

C. Amendments to licenses in effect on the effective date of this regulation may be issued providing that the required financial assurance arrangements are established within 90 days after the effective date of LAC 33:XV.351.

D. The following licensees are required to make financial assurance arrangements:

1. major processors;

2. waste-handling licensees;

3. all others except licensees exempt in accordance with LAC 33:XV.399.Appendix A; and

4. any other licensee that the department determines to have the potential to default, abandon, or otherwise cause liabilities that would endanger public health and safety.

E. The department may reevaluate, at any time, the adequacy of an existing financial assurance arrangement and may require an adjustment by either increasing or decreasing the amount of the financial assurance arrangement required.

AUTHORITY NOTE: Promulgated in accordance with R.S. 30:2001 et seq.

HISTORICAL NOTE: Promulgated by the Department of Environmental Quality, Office of Air Quality and Radiation Protection, Radiation Protection Division, LR 18:34 (January 1992), amended by the Office of Environmental Assessment, Environmental Planning Division, LR 26:2573 (November 2000), LR 27:1228 (August 2001), amended by the Office of Environmental Assessment, LR 31:45 (January 2005).

§361. Registration of Product Information

A. Any manufacturer or initial distributor of a sealed source or a device containing a sealed source whose product is intended for use under a specific license may submit a request to the department for evaluation of radiation safety information about its product and for its registration.

B. The request for review must be sent by an appropriate method to the Office of Environmental Compliance, Emergency and Radiological Services Division.

C. The request for review of a sealed source or a device must include sufficient information about the design, manufacture, prototype testing, quality control program, labeling, proposed uses, and leak testing. For a device, the request must also include sufficient information about installation, service and maintenance, operating and safety instructions, and its potential hazards, to provide reasonable assurance that the radiation safety properties of the source or device are adequate to protect health and minimize danger to life and property.

D. The department normally evaluates a sealed source or a device using radiation safety criteria in accepted industry standards. If these standards and criteria do not readily apply to a particular case, the department formulates reasonable standards and criteria with the help of the manufacturer or distributor. The department shall use criteria and standards sufficient to ensure that the radiation safety properties of the device or sealed source are adequate to protect health and minimize danger to life and property.

E. After completion of the evaluation, the department issues a certificate of registration to the person making the request. The certificate of registration acknowledges the availability of the submitted information for inclusion in an application for a specific license proposing use of the product.

F. The person submitting the request for evaluation and registration of safety information about the product shall manufacture and distribute the product in accordance with:

1. the statements and representations, including quality control program, contained in the request; and

2. the provisions of the registration certificate.

AUTHORITY NOTE: Promulgated in accordance with R.S. 30:2001 et seq.

HISTORICAL NOTE: Promulgated by the Department of Environmental Quality, Office of Environmental Assessment, LR 31:45 (January 2005), amended by the Office of the Secretary, Legal Affairs Division, LR 31:2528 (October 2005).

Subchapter E. Reciprocity

§390. Reciprocal Recognition of Licenses

A. Subject to these regulations, any person who holds a specific license from the U.S. Nuclear Regulatory Commission, any other agreement state, or any licensing state and issued by the agency having jurisdiction where the licensee maintains an office for directing the licensed activity and at which radiation safety records are normally maintained, is hereby granted a general license to conduct the activities authorized in such licensing document within this state, except in areas of exclusive federal jurisdiction, for any period of time deemed appropriate by the department provided that the following conditions are met.

1. The licensing document does not limit the activity authorized by such document to specified installations or locations.

2. For each separate location in Louisiana, the out-of-state licensee notifies the Office of Environmental Compliance, Emergency and Radiological Services Division, in writing at least three working or business days prior to engaging in such activity. Such notification shall indicate the location, period, and type of proposed possession and use within the state and shall be accompanied by a copy of the pertinent licensing document. If, for a specific case, the three working or business day period would impose an undue hardship on the out-of-state licensee, he or she may, upon written application to the Office of Environmental Compliance, Emergency and Radiological Services Division, obtain permission to proceed sooner. The department may waive the requirement for filing additional written notifications following the receipt of the initial written notification from a person engaging in activities under the general license provided in this Subsection.

3. The out-of-state licensee complies with all applicable Louisiana Radiation Protection Regulations (LAC 33:XV) and with all the terms and conditions of his or her licensing document, except any such terms and conditions that may be inconsistent with applicable Louisiana Radiation Protection Regulations (LAC 33:XV).

4. The out-of-state licensee maintains a current copy of the appropriate license and all amendments thereto with the department.

5. The out-of-state licensee supplies such other information as the department may request.

6. Any out-of-state licensee who establishes a permanent office in Louisiana shall notify the Office of Environmental Compliance, Emergency and Radiological Services Division, within 10 calendar days of establishing such office and shall, upon direction by the department and within 30 calendar days, make application for a radioactive material license in accordance with LAC 33:XV.326.E.

7. The out-of-state licensee shall not transfer or dispose of radioactive material possessed or used under the

general license provided in LAC 33:XV.390.A except by transfer to a person:

a. specifically licensed by the administrative authority, any other agreement state, any licensing state, or the U.S. Nuclear Regulatory Commission, as appropriate, to receive such material; or

b. exempt from the requirements for a license for such material under LAC 33:XV.304.A.

B. Notwithstanding the provisions of LAC 33:XV.390.A, any person who holds a specific license issued by the U.S. Nuclear Regulatory Commission, any other agreement state, or a licensing state authorizing the holder to manufacture, transfer, install, or service a device described in LAC 33:XV.322.D.1 within areas subject to the jurisdiction of the licensing agency is hereby granted a general license to install, transfer, demonstrate, or service such a device in this state provided that the following conditions are met.

1. Such person shall file a report with the Office of Environmental Compliance, Emergency and Radiological Services Division, within 30 calendar days after the end of each calendar quarter in which any device is transferred to or installed in this state. Each such report shall identify each general licensee to whom such device is transferred by name and address, the type of device transferred, and the quantity and type of radioactive material contained in the device.

2. The device has been manufactured, labeled, installed, and serviced in accordance with applicable provisions of the specific license issued to such person by the U.S. Nuclear Regulatory Commission, an agreement state, or a licensing state.

3. Such person shall assure that any labels required to be affixed to the device under regulations of the authority that licensed manufacture of the device bear a statement that "Removal of This Label is Prohibited."

4. The holder of the specific license shall furnish to each general licensee to whom he or she transfers such device or on whose premises he or she installs such device a copy of the general license contained in LAC 33:XV.322.D.

C. The department may withdraw, limit, or qualify its acceptance of any specific license or equivalent licensing document issued by another regulatory agency, or any product distributed pursuant to such licensing document, upon determining that such action is necessary in order to prevent undue hazard to public welfare and safety or property.

AUTHORITY NOTE: Promulgated in accordance with R.S. 30:2001 et seq.

HISTORICAL NOTE: Promulgated by the Department of Environmental Quality, Nuclear Energy Division, LR 13:569 (October 1987), amended by the Office of Air Quality and Radiation Protection, Radiation Protection Division, LR 18:34 (January 1992), amended by the Office of Environmental Assessment, Environmental Planning Division, LR 26:2574 (November 2000), LR 26:2768 (December 2000), amended by the Office of the Secretary, Legal Affairs Division, LR 31:2528 (October 2005).

Subchapter Z. Appendices

§399. Schedules A and B, and Appendices A, B, C, D, E, and F

Schedule A
Exempt Concentrations
(See notes at end of Schedule A)

Element (atomic number)	Isotope	Column I Gas Concentrations (μCi/ml)[1]	Column II Liquid and Solid Concentration (μCi/ml)[2]
Antimony (51)	Sb-122		3×10^{-4}
	Sb-124		2×10^{-4}
	Sb-125		1×10^{-3}
Argon (18)	Ar-37	1×10^{-3}	
	Ar-41	4×10^{-7}	
Arsenic (33)	As-73		5×10^{-3}
	As-74		5×10^{-4}
	As-76		2×10^{-4}
	As-77		8×10^{-4}
Barium (56)	Ba-131		2×10^{-3}
	Ba-140		3×10^{-4}
Beryllium (4)	Be-7		2×10^{-2}
Bismuth (83)	Bi-206		4×10^{-4}
Bromine (35)	Br-82	4×10^{-7}	3×10^{-3}
Cadmium (48)	Cd-109		2×10^{-3}
	Cd-115m		3×10^{-4}
	Cd-115		3×10^{-4}
Calcium (20)	Ca-45		9×10^{-5}
	Ca-47		5×10^{-4}
Carbon (6)	C-14	1×10^{-6}	8×10^{-3}
Cerium (58)	Ce-141		9×10^{-4}
	Ce-143		4×10^{-4}
	Ce-144		1×10^{-4}
Cesium (55)	Cs-131		2×10^{-2}
	Cs-134m		6×10^{-2}
	Cs-134		9×10^{-5}
Chlorine (17)	Cl-38	9×10^{-7}	4×10^{-3}
Chromium (24)	Cr-51		2×10^{-2}
Cobalt (27)	Co-57		5×10^{-3}
	Co-58		1×10^{-3}
	Co-60		5×10^{-4}
Copper (29)	Cu-64		3×10^{-3}
Dysprosium (66)	Dy-165		4×10^{-3}
	Dy-166		4×10^{-4}
Erbium (68)	Er-169		9×10^{-4}
	Er-171		1×10^{-3}
Europium (63)	Eu-152 (T/2=9.2 hrs)		6×10^{-4}
	Eu-155		2×10^{-3}
Fluorine (9)	F-18	2×10^{-6}	8×10^{-3}
Gadolinium (64)	Gd-153		2×10^{-3}
	Gd-159		8×10^{-4}
Gallium (31)	Ga-72		4×10^{-4}
Germanium (32)	Ge-71		2×10^{-2}
Gold (79)	Au-196		2×10^{-3}
	Au-198		5×10^{-4}
	Au-199		2×10^{-3}
Hafnium (72)	Hf-181		7×10^{-4}
Hydrogen(1)	H-3	5×10^{-6}	3×10^{-2}
Indium (49)	In-113m		1×10^{-2}
	In-114m		2×10^{-4}
Iodine (53)	I-126	3×10^{-9}	2×10^{-5}
	I-131	3×10^{-9}	2×10^{-5}
	I-132	8×10^{-8}	6×10^{-4}
	I-133	1×10^{-8}	7×10^{-5}

Schedule A Exempt Concentrations (See notes at end of Schedule A)			
Element (atomic number)	**Isotope**	**Column I Gas Concentrations (μCi/ml)[1]**	**Column II Liquid and Solid Concentration (μCi/ml)[2]**
	I-134	2×10^{-7}	1×10^{-3}
Iridium (77)	Ir-190		2×10^{-3}
	Ir-192		4×10^{-4}
	Ir-194		3×10^{-4}
Iron (26)	Fe-55		8×10^{-3}
	Fe-59		6×10^{-4}
Krypton (36)	Kr-85m	1×10^{-6}	
	Kr-85	3×10^{-6}	
Lanthanum (57)	La-140		2×10^{-4}
Lead (82)	Pb-203		4×10^{-3}
Lutetium (71)	Lu-177		1×10^{-3}
Manganese (25)	Mn-52		3×10^{-4}
	Mn-54		1×10^{-3}
	Mn-56		1×10^{-3}
Mercury (80)	Hg-197m		2×10^{-3}
	Hg-197		3×10^{-3}
	Hg-203		2×10^{-4}
Molybdenum (42)	Mo-99		2×10^{-3}
Neodymium (60)	Nd-147		6×10^{-4}
	Nd-149		3×10^{-3}
Nickel (28)	Ni-65		1×10^{-3}
Niobium (41) (Columbium)	Nb-95		1×10^{-3}
	Nb-97		9×10^{-3}
Osmium (76)	Os-185		7×10^{-4}
	Os-191m		3×10^{-2}
	Os-191		2×10^{-3}
	Os-193		6×10^{-4}
Palladium (46)	Pd-103		3×10^{-3}
	Pd-109		9×10^{-4}
Phosphorus (15)	P-32		2×10^{-4}
Platinum (78)	Pt-191		1×10^{-3}
	Pt-193m		1×10^{-2}
	Pt-197m		1×10^{-2}
	Pt-197		1×10^{-3}
Potassium (19)	K-42		3×10^{-3}
Praseodymium (59)	Pr-142		3×10^{-4}
	Pr-143		5×10^{-4}
Promethium (61)	Pm-147		2×10^{-3}
	Pm-149		4×10^{-4}
Rhenium (75)	Re-183		6×10^{-3}
	Re-186		9×10^{-4}
	Re-188		6×10^{-4}
Rhodium (45)	Rh-103m		1×10^{-1}
	Rh-105		1×10^{-3}
Rubidium (37)	Rb-86		7×10^{-4}
Ruthenium (44)	Ru-97		4×10^{-3}
	Ru-103		8×10^{-4}
	Ru-105		1×10^{-3}
	Ru-106		1×10^{-4}
Samarium (62)	Sm-153		8×10^{-4}
Scandium (21)	Sc-46		4×10^{-4}
	Sc-47		9×10^{-4}
	Sc-48		3×10^{-4}
Selenium (34)	Se-75		3×10^{-3}
Silicon (14)	Si-31		9×10^{-3}
Silver (47)	Ag-105		1×10^{-3}
	Ag-110m		3×10^{-4}
	Ag-111		4×10^{-4}
Sodium (11)	Na-24		2×10^{-3}
Strontium (38)	Sr-85		1×10^{-3}

Schedule A Exempt Concentrations (See notes at end of Schedule A)			
Element (atomic number)	**Isotope**	**Column I Gas Concentrations (μCi/ml)[1]**	**Column II Liquid and Solid Concentration (μCi/ml)[2]**
	Sr-89		1×10^{-4}
	Sr-91		7×10^{-4}
	Sr-92		7×10^{-4}
Sulfur (16)	S-35	9×10^{-8}	6×10^{-4}
Tantalum (73)	Ta-182		4×10^{-4}
Technetium (43)	Tc-96m		1×10^{-1}
	Tc-96		1×10^{-3}
Tellurium (52)	Te-125m		2×10^{-3}
	Te-127m		6×10^{-4}
	Te-127		3×10^{-3}
	Te-129m		3×10^{-4}
	Te-131m		6×10^{-4}
	Te-132		3×10^{-4}
Terbium (65)	Tb-160		4×10^{-4}
Thallium (81)	Tl-200		4×10^{-3}
	Tl-201		3×10^{-3}
	Tl-202		1×10^{-3}
	Tl-204		1×10^{-3}
Thulium (69)	Tm-170		5×10^{-4}
	Tm-171		5×10^{-3}
Tin (50)	Sn-113		9×10^{-4}
	Sn-125		2×10^{-4}
Tungsten (Wolfram) (74)	W-181		4×10^{-3}
	W-187		7×10^{-4}
Vanadium (23)	V-48		3×10^{-4}
Xenon (54)	Xe-131m	4×10^{-6}	
	Xe-133	3×10^{-6}	
	Xe-135	1×10^{-6}	
Ytterbium (70)	Yb-175		1×10^{-3}
Yttrium (39)	Y-90		2×10^{-4}
	Y-91m		3×10^{-2}
	Y-91		3×10^{-4}
	Y-92		6×10^{-4}
	Y-93		3×10^{-4}
Zinc (30)	Zn-65		1×10^{-3}
	Zn-69m		7×10^{-4}
	Zn-69		2×10^{-2}
Zirconium (40)	Zr-95		6×10^{-4}
	Zr-97		2×10^{-4}
Beta- and/or gamma-emitting radioactive material not listed above with half-life less than 3 years.		1×10^{-10}	1×10^{-6}

Footnotes to Schedule A:

[1] Values are given only for those materials normally used as gases.

[2] μCi/gm for solids.

NOTE 1. Many radioisotopes disintegrate into isotopes which are also radioactive. In expressing the concentrations in Schedule A, the activity stated is that of the parent isotope and takes into account the daughters.

NOTE 2. For purposes of LAC 33:XV.304, where there is involved a combination of isotopes, the limit for the combination should be derived as follows: Determine for each isotope in the product the ratio between the radioactivity concentration present in the product and the exempt

radioactivity concentration established in Schedule A for the specific isotope when not in combination. The sum of such ratios may not exceed "l" (i.e., unity).

Example:

$$\frac{\text{Concentration of Isotope A in Product}}{\text{Exempt concentration of Isotope A}} + \frac{\text{Concentration of Isotope B in Product}}{\text{Exempt concentration of Isotope B}} = 1$$

NOTE 3. To convert μCi/ml to SI units of megabecquerels per liter, multiply the above values by 37.

Example:

Zirconium (40) Zr-97 (2×10^{-4} μ Ci/ml multiplied by 37 is equivalent to 74×10^{-4} MBq/1)

NOTE 4. Values in Column I are given only for those materials normally used as gases. In Column II, concentrations are expressed in μCi/ml for liquids and μCi/gm for solids.

Schedule B Exempt Quantities	
Byproduct Material	**Microcuries**
Antimony 122 (Sb 122)	100
Antimony 124 (Sb 124)	10
Antimony 125 (Sb 125)	10
Arsenic 73 (As 73)	100
Arsenic 74 (As 74)	10
Arsenic 76 (As 76)	10
Arsenic 77 (As 77)	100
Barium 131 (Ba 131)	10
Barium 133 (Ba 133)	10
Barium 140 (Ba 140)	10
Bismuth 210 (Bi 210)	1
Bromine 82 (Br 82)	10
Cadmium 109 (Cd 109)	10
Cadmium 115m (Cd 115m)	10
Cadmium 115 (Cd 115)	100
Calcium 45 (Ca 45)	10
Calcium 47 (Ca 47)	10
Carbon 14 (C 14)	100
Cerium 141 (Ce 141)	100
Cerium 143 (Ce 143)	100
Cerium 144 (Ce 144)	1
Cesium 131 (Cs 131)	1,000
Cesium 134m (Cs 134m)	100
Cesium 134 (Cs 134)	1
Cesium 135 (Cs 135)	10
Cesium 136 (Cs 136)	10
Cesium 137 (Cs 137)	10
Chlorine 36 (Cl 36)	10
Chlorine 38 (Cl 38)	10
Chromium 51 (Cr 51)	1,000
Cobalt 58m (Co 58m)	10
Cobalt 58 (Co 58)	10
Cobalt 60 (Co 60)	1
Copper 64 (Cu 64)	100
Dysprosium 165 (Dy 165)	10
Dysprosium 166 (Dy 166)	100

Schedule B Exempt Quantities	
Byproduct Material	**Microcuries**
Erbium 169 (Er 169)	100
Erbium 171 (Er 171)	100
Europium 152 9.2h (Eu 152 9.2h)	100
Europium 152 13 yr (Eu 152 13 yr)	1
Europium 154 (Eu 154)	1
Europium 155 (Eu 155)	10
Fluorine 18 (F 18)	1,000
Gadolinium 153 (Gd 153)	10
Gadolinium 159 (Gd 159)	100
Gallium 67 (Ga 67)	100
Gallium 72 (Ga 72)	10
Germanium 71 (Ge 71)	100
Gold 198 (Au 198)	100
Gold 199 (Au 199)	100
Hafnium 181 (Hf 181)	10
Holmium 166 (Ho 166)	100
Hydrogen 3 (H 3)	1,000
Indium 113m (In 113m)	100
Indium 114m (In 114m)	10
Indium 115m (In 115m)	100
Indium 115 (In 115)	10
Iodine 125 (I 125)	1
Iodine 126 (I 126)	1
Iodine 129 (I 129)	0.1
Iodine 131 (I 131)	1
Iodine 132 (I 132)	10
Iodine 133 (I 133)	1
Iodine 134 (I 134)	10
Iodine 135 (I 135)	10
Iridium 192 (Ir 192)	10
Iridium 194 (Ir 194)	100
Iron 55 (Fe 55)	100
Iron 59 (Fe 59)	10
Krypton 85 (Kr 85)	100
Krypton 87 (Kr 87)	10
Lanthanum 40 (La 140)	10
Lutetium 177 (Lu 177)	100
Manganese 52 (Mn 52)	10
Manganese 54 (Mn 54)	10
Manganese 56 (Mn 56)	10
Mercury 197m (Hg 197m)	100
Mercury 197 (Hg 197)	100
Mercury 203 (Hg 203)	10
Molybdenum 99 (Mo 99)	100
Neodymium 147 (Nd 147)	100
Neodymium 149 (Nd 149)	100
Nickel 59 (Ni 59)	100
Nickel 63 (Ni 63)	10
Nickel 65 (Ni 65)	100
Niobium 93m (Nb 93m)	10
Niobium 95 (Nb 95)	10
Niobium 97 (Nb 97)	10
Osmium 185 (Os 185)	10
Osmium 191m (Os 191m)	100
Osmium 191 (Os 191)	100
Osmium 193 (Os 193)	100
Palladium 103 (Pd 103)	100
Palladium 109 (Pd 109)	100
Phosphorus 32 (P 32)	10
Platinum 191 (Pt 191)	100
Platinum 193m (Pt 193m)	100
Platinum 193 (Pt 193)	100
Platinum 197m (Pt 197m)	100
Platinum 97 (Pt 197)	100
Polonium 210 (P 210)	0.1
Potassium 42 (K 42)	10

Schedule B Exempt Quantities	
Byproduct Material	**Microcuries**
Praseodymium 142 (Pr 142)	100
Praseodymium 143 (Pr 143)	100
Promethium 147 (Pm 147)	10
Promethium 149 (Pm 149)	10
Rhenium 186 (Re 186)	100
Rhenium 188 (Re 188)	100
Rhodium 103m (Rh 103m)	100
Rhodium 105 (Rh 105)	100
Rubidium 86 (Rb 86)	10
Rubidium 87 (Rb 87)	10
Ruthenium 97 (Ru 97)	100
Ruthenium 103 (Ru 103)	10
Ruthenium 105 (Ru 105)	10
Ruthenium 106 (Ru 106)	1
Samarium 151 (Sm 151)	10
Samarium 153 (Sm 153)	100
Scandium 46 (Sc 46)	10
Scandium 47 (Sc 47)	100
Scandium 48 (Sc 48)	10
Selenium 75 (Se 75)	10
Silicon 31 (Si 31)	100
Silver 105 (Ag 105)	10
Silver 110m (Ag 110m)	1
Silver 111 (Ag 111)	100
Sodium 24 (Na 24)	10
Strontium 85 (Sr 85)	10
Strontium 89 (Sr 89)	1
Strontium 90 (Sr 90)	0.1
Strontium 91 (Sr 91)	10
Strontium 92 (Sr 92)	10
Sulfur 35 (S 35)	100
Tantalum 182 (Ta 182)	10
Technetium 96 (Tc 96)	10
Technetium 97m (Tc 97m)	100
Technetium 97 (Tc 97)	100
Technetium 99m (Tc 99m)	100
Technetium 99 (Tc 99)	10

Schedule B Exempt Quantities	
Byproduct Material	**Microcuries**
Tellurium 125m (Te 125m)	10
Tellurium 127m (Te 127m)	10
Tellurium 127 (Te 127)	100
Tellurium 129m (Te 129m)	10
Tellurium 129 (Te 129)	100
Tellurium 131m (Te 131m)	10
Tellurium 132 (Te 132)	10
Terbium 60 (Tb 160)	10
Thallium 200 (Tl 200)	100
Thallium 201 (Tl 201)	100
Thallium 202 (Tl 202)	100
Thallium 204 (Tl 204)	10
Thulium 170 (Tm 170)	10
Thulium 171 (Tm 171)	10
Tin 113 (Sn 113)	10
Tin 125 (Sn 125)	10
Tungsten 181 (W 181)	10
Tungsten 185 (W 185)	10
Tungsten 187 (W 187)	100
Vanadium 48 (V 48)	10
Xenon 131m (Xe 131m)	1,000
Xenon 133 (Xe 133)	100
Xenon 135 (Xe 135)	100
Ytterbium 175 (Yb 175)	100
Yttrium 90 (Y 90)	10
Yttrium 91 (Y 91)	10
Yttrium 92 (Y 92)	100
Yttrium 93 (Y 93)	100
Zinc 65 (Zn 65)	10
Zinc 69m (Zn 69m)	100
Zinc 69 (Zn 69)	1,000
Zirconium 93 (Zr 93)	10
Zirconium 95 (Zr 95)	10
Zirconium 97 (Zr 97)	10
Any byproduct material not listed above other than alpha-emitting byproduct material.	0.1

Appendix A Financial Assurance Arrangements Recommended Amounts for Mitigation, Liability, and Decommissioning			
By Title	**Clean Up**	**Third Party &/or Off-Site Damages**	**Decommissioning**
A. Licensees 1. Manufacturing & Distribution 2. Radiography 3. Gauges 4. Well Logging 5. Nuclear Medicine 6. Rad. Therp. 7. Acad. 8. R & D 9. Instru. Calib. 10. Irradiators 11. Ind. other than gauges 12. Consultants 13. General Lic. 14. Others not listed in Category A	As determined by the chosen method	As determined by the chosen method	For Category A as a whole by quantity of material (Q): 1. $Q > 10^{10}$ x LAC 33:XV.399.Appendix D, as sealed sources = $113,000. 2. ($10^4$ x LAC 33:XV.399.Appendix D, unsealed sources) ≥ Q > (10^3 x LAC 33:XV.399.Appendix D, unsealed sources), or 10-100 mCi source materials, dispersible form = $225,000. 3. ($10^5$ x LAC 33:XV.399.Appendix D, unsealed sources) ≥ Q > (10^4 x LAC 33:XV.399.Appendix D, unsealed sources) = $1,125,000.

Appendix A Financial Assurance Arrangements Recommended Amounts for Mitigation, Liability, and Decommissioning			
By Title	**Clean Up**	**Third Party &/or Off-Site Damages**	**Decommissioning**
B. Low Quantity 1. In Vitro 2. Gas Chromatograph 3. Greater than or Equal to 100 x to 1000 x Exempt Quantity 4. Unsealed, discrete alpha emitters, 10µCi total 5. Check sources of sufficient quantity to require leak testing	As determined by the chosen method	As determined by the chosen method	NA for this category.

Appendix B

Criteria Relating to Use of Financial Tests and Parent Company Guarantees for Providing Reasonable Assurance of Funds for Decommissioning

An applicant or licensee may provide reasonable assurance of the availability of funds for decommissioning based on obtaining a parent company guarantee that funds will be available for decommissioning costs and on a demonstration that the parent company passes a financial test. This Appendix establishes criteria for passing the financial test and for obtaining the parent company guarantee.

A. To pass the financial test the parent company must meet the criteria of either Paragraph A.1 or 2 of this Appendix.

1. The parent company must have:

a. two of the following three ratios:

i. a ratio of total liabilities to net worth less than 2.0;

ii. a ratio of the sum of net income plus depreciation, depletion, and amortization to total liabilities greater than 0.1; and

iii. a ratio of current assets to current liabilities greater than 1.5; and

b. net working capital and tangible net worth each at least six times the current decommissioning cost estimates (or prescribed amount if a certification is used); and

c. tangible net worth of at least $10 million; and

d. assets located in the United States amounting to at least 90 percent of total assets or at least six times the current decommissioning cost estimates (or prescribed amount if a certification is used).

2. The parent company must have:

a. a current rating for its most recent bond issuance of AAA, AA, A, or BBB as issued by Standard and Poor's or Aaa, Aa, A, or Baa as issued by Moody's;

b. tangible net worth at least six times the current decommissioning cost estimate (or prescribed amount if a certification is used); and

c. assets located in the United States amounting to at least 90 percent of total assets or at least six times the current decommissioning cost estimates (or prescribed amount if certification is used).

B. The parent company's independent certified public accountant must have compared the data used by the parent company in the financial test, which is derived from the independently audited, year-end financial statements for the latest fiscal year, with the amounts in such financial statement. In connection with that procedure the licensee shall inform the Office of Environmental Compliance, Emergency and Radiological Services Division, within 90 days of any matters coming to the auditor's attention which cause the auditor to believe that the data specified in the financial test should be adjusted and that the company no longer passes the test.

C. After the initial financial test, the parent company must repeat the passage of the test within 90 days after the close of each succeeding fiscal year.

D. If the parent company no longer meets the requirements of Subsection A of this Appendix, the licensee must send notice to the Office of Environmental Compliance, Emergency and Radiological Services Division, of intent to establish alternate financial assurance as specified in these regulations. The notice must be sent by certified mail within 90 days after the end of the fiscal year for which the year-end financial data show that the parent company no longer meets the financial test requirements. The licensee must provide alternate financial assurance within 120 days after the end of such fiscal year.

E. The terms of a parent company guarantee that an applicant or licensee obtains must provide that:

1. the parent company guarantee will remain in force unless the guarantor sends notice of cancellation by certified mail to the licensee and the Office of Environmental Compliance, Emergency and Radiological Services Division. Cancellation may not occur, however, during the 120 days beginning on the date of receipt of the notice of cancellation by both the licensee and the department, as evidenced by the return receipt;

2. if the licensee fails to provide alternate financial assurance as specified in these regulations within 90 days after receipt by the licensee and the department of a notice of cancellation of the parent company guarantee from the guarantor, the guarantor will provide such alternative financial assurance in the name of the licensee;

3. the parent company guarantee and financial test provisions must remain in effect until the department has terminated the license;

4. if a trust is established for decommissioning costs, the trustee and trust must be acceptable to the department. An acceptable trustee includes an appropriate state or federal government agency or an entity which has the authority to act as a trustee and whose trust operations are regulated and examined by a federal or state agency.

Appendix C

Quantities of Radioactive Materials Requiring Consideration of the Need for an Emergency Plan for Responding to a Release

Radioactive Material[1]	Release Fraction	Quantity (curies)
Actinium-228	.001	4,000
Americium-241	.001	2
Americium-242	.001	2
Americium-243	.001	2
Antimony-124	.01	4,000

Appendix C Quantities of Radioactive Materials Requiring Consideration of the Need for an Emergency Plan for Responding to a Release		
Radioactive Material[1]	**Release Fraction**	**Quantity (curies)**
Antimony-126	.01	6,000
Barium-133	.01	10,000
Barium-140	.01	30,000
Bismuth-207	.01	5,000
Bismuth-210	.01	600
Cadmium-109	.01	1,000
Cadmium-113	.01	80
Calcium-45	.01	20,000
Californium-252	.001	9 (20 mg)
Carbon-14	.01 NON CO	50,000
Cerium-141	.01	10,000
Cerium-144	.01	300
Cesium-134	.01	2,000
Cesium-137	.01	3,000
Chlorine-36	.5	100
Chromium-51	.01	300,000
Cobalt-60	.001	5,000
Copper-64	.01	200,000
Curium-242	.001	60
Curium-243	.001	3
Curium-244	.001	4
Curium-245	.001	2
Europium-152	.01	500
Europium-154	.01	400
Europium-155	.01	3,000
Germanium-68	.01	2,000
Gadolinium-153	.01	5,000
Gold-198	.01	30,000
Hafnium-172	.01	400
Hafnium-181	.01	7,000
Holmium-166m	.01	100
Hydrogen-3	.5	20,000
Iodine-125	.5	10
Iodine-131	.5	10
Indium-114m	.01	1,000
Iridium-192	.001	40,000
Iron-55	.01	40,000
Iron-59	.01	7,000
Krypton-85	1	6,000,000
Lead-210	.01	8
Manganese-56	.01	60,000
Mercury-203	.01	10,000
Molybdenum-99	.01	30,000
Neptunium-237	.001	2
Nickel-63	.01	20,000
Niobium-94	.01	300
Phosphorus-32	.5	100

Appendix C Quantities of Radioactive Materials Requiring Consideration of the Need for an Emergency Plan for Responding to a Release		
Radioactive Material[1]	**Release Fraction**	**Quantity (curies)**
Phosphorus-33	.5	1,000
Polonium-210	.01	10
Potassium-42	.01	9,000
Promethium-145	.01	4,000
Promethium-147	.01	4,000
Ruthenium-106	.01	200
Samarium-151	.01	4,000
Scandium-46	.01	3,000
Selenium-75	.01	10,000
Silver-110m	.01	1,000
Sodium-22	.01	9,000
Sodium-24	.01	10,000
Strontium-89	.01	3,000
Strontium-90	.01	90
Sulfur-35	.5	900
Technetium-99	.01	10,000
Technetium-99m	.01	400,000
Tellurium-127m	.01	5,000
Tellurium-129m	.01	5,000
Terbium-160	.01	4,000
Thulium-170	.01	4,000
Tin-113	.01	10,000
Tin-123	.01	3,000
Tin-126	.01	1,000
Titanium-44	.01	100
Vanadium-48	.01	7,000
Xenon-133	1	900,000
Yttrium-91	.01	2,000
Zinc-65	.01	5,000
Zirconium-93	.01	400
Zirconium-95	.01	5,000
Any other beta-gamma emitter	.01	10,000
Mixed fission products	.01	1,000
Mixed corrosion products	.01	10,000
Contaminated equipment beta-gamma	.001	10,000
Irradiated material, any form other than solid noncombustible	.01	1,000
Irradiated material, solid noncombustible	.001	10,000
Mixed radioactive waste, beta-gamma	.01	1,000
Packaged mixed waste, beta-gamma[2]	.001	10,000
Any other alpha emitter	.001	2
Contaminated equipment, alpha	.0001	20
Packaged waste, alpha[2]	.0001	20
Combinations of radioactive materials listed above[1]		

[1]For combinations of radioactive materials, consideration of the need for an emergency plan is required if the sum of the ratios of the quantity of each radioactive material authorized to the quantity listed for that material in Appendix E exceeds one.

[2]Waste packaged in Type B containers does not require an emergency plan.

Appendix D	
Quantities For Use With Decommissioning	
Material	**Microcurie***
Americium-241	0.01
Antimony-122	100
Antimony-124	10
Antimony-125	10
Arsenic-73	100
Arsenic-74	10
Arsenic-76	10
Arsenic-77	100
Barium-131	10
Barium-133	10
Barium-140	10
Bismuth-210	1
Bromine-82	10
Cadmium-109	10
Cadmium-115m	10
Cadmium-115	100
Calcium-45	10
Calcium-47	10
Carbon-14	100
Cerium-141	100
Cerium-143	100
Cerium-144	1
Cesium-131	1,000
Cesium-134m	100
Cesium-134	1
Cesium-135	10
Cesium-136	10
Cesium-137	10
Chlorine-36	10
Chlorine-38	10
Chromium-51	1,000
Cobalt-58m	10
Cobalt-58	10
Cobalt-60	1
Copper-64	100
Dysprosium-165	10
Dysprosium-166	100
Erbium-169	100
Erbium-171	100
Europium-152 (9.2h)	100
Europium-152 (13yr)	1
Europium-154	1
Europium-155	10

Appendix D	
Quantities For Use With Decommissioning	
Material	**Microcurie***
Fluorine-18	1,000
Gadolinium-153	10
Gadolinium-159	100
Gallium-72	10
Germanium-71	100
Gold-198	100
Gold-199	100
Hafnium-181	10
Holmium-166	100
Hydrogen-3	1,000
Indium-113m	100
Indium-114m	10
Indium-115m	100
Indium-115	10
Iodine-125	1
Iodine-126	1
Iodine-129	0.1
Iodine-131	1
Iodine-132	10
Iodine-133	1
Iodine-134	10
Iodine-135	10
Iridium-192	10
Iridium-194	100
Iron-55	100
Iron-59	10
Krypton-85	100
Krypton-87	10
Lanthanum-140	10
Lutetium-177	100
Manganese-52	10
Manganese-54	10
Manganese-56	10
Mercury-197m	100
Mercury-197	100
Mercury-203	10
Molybdenum-99	100
Neodymium-147	100
Neodymium-149	100
Nickel-59	100
Nickel-63	10
Nickel-65	100
Niobium-93m	10
Niobium-95	10
Niobium-97	10
Osmium-185	10
Osmium-191m	100
Osmium-191	100
Osmium-193	100
Palladium-103	100
Palladium-109	100

Appendix D	
Quantities For Use With Decommissioning	
Material	**Microcurie***
Phosphorus-32	10
Platinum-191	100
Platinum-193m	100
Platinum-193	100
Platinum-197m	100
Platinum-197	100
Plutonium-239	0.01
Polonium-210	0.1
Potassium-42	10
Praseodymium-142	100
Praseodymium-143	100
Promethium-147	10
Promethium-149	10
Radium-226	0.01
Rhenium-186	100
Rhenium-188	100
Rhodium-103m	100
Rhodium-105	100
Rubidium-86	10
Rubidium-87	10
Ruthenium-97	100
Ruthenium-103	10
Ruthenium-105	10
Ruthenium-106	1
Samarium-151	10
Samarium-153	100
Scandium-46	10
Scandium-47	100
Scandium-48	10
Selenium-75	10
Silicon-31	100
Silver-105	10
Silver-110m	1
Silver-111	100
Sodium-22	10
Sodium-24	10
Strontium-85	10
Strontium-89	1
Strontium-90	0.1
Strontium-91	10
Strontium-92	10
Sulfur-35	100
Tantalum-182	10
Technetium-96	10
Technetium-97m	100
Technetium-97	100
Technetium-99m	100
Technetium-99	10
Tellurium-125m	10
Tellurium-127m	10
Tellurium-127	100

Appendix D	
Quantities For Use With Decommissioning	
Material	**Microcurie***
Tellurium-129m	10
Tellurium-129	100
Tellurium-131m	10
Tellurium-132	10
Terbium-160	10
Thallium-200	100
Thallium-201	100
Thallium-202	100
Thallium-204	10
Thorium (natural)**	100
Thulium-170	10
Thulium-171	10
Tin-113	10
Tin-125	10
Tungsten-181	10
Tungsten-185	10
Tungsten-187	100
Uranium (natural)***	100
Uranium-233	0.01
Uranium-234	0.01
Uranium-235	0.01
Vanadium-48	10
Xenon-131m	1,000
Xenon-133	100
Xenon-135	100
Ytterbium-175	100
Yttrium-90	10
Yttrium-91	10
Yttrium-92	100
Yttrium-93	100
Zinc-65	10
Zinc-69m	100
Zinc-69	1,000
Zirconium-93	10
Zirconium-95	10
Zirconium-97	10
Any alpha emitting radionuclide not listed above or mixtures of alpha emitters of unknown composition	0.01
Any radionuclide other than alpha emitting radionuclides, not listed above or mixtures of beta emitters of unknown composition	0.1

* To convert μCi to kBq, multiply the μCi value by 37.
** Based on alpha disintegration rate of Th-232, Th-230 and their daughter products.
*** Based on alpha disintegration rate of U-238, U-234, and U-235.

[NOTE: This Appendix is retained for use by those agreement states that need to adopt decommissioning regulations compatible with the U.S. Nuclear Regulatory Commission.]

[NOTE: Where there is involved a combination of isotopes in known amounts, the limit for the combination should be derived as follows: Determine, for each isotope in the combination, the ratio between the quantity present in the combination and the limit otherwise established for the specific isotope when not in combination. The sum of such ratios for all the isotopes in the combination may not exceed "1" or unity.]

Appendix E

Criteria Relating To Use of Financial Tests and Self-Guarantee for Providing Reasonable Assurance of Funds for Decommissioning by Commercial Companies That Have no Outstanding Rated Bonds

A. Introduction. An applicant or licensee may provide reasonable assurance of the availability of funds for decommissioning based on furnishing its own guarantee that funds will be available for decommissioning costs and on a demonstration that the company passes the financial test of Subsection B of this Appendix. The terms of the self-guarantee are in Subsection C of this Appendix. This Appendix establishes criteria for passing the financial test for the self-guarantee and establishes the terms for a self-guarantee.

B. Financial Test

1. To pass the financial test a company must meet the following criteria:

a. tangible net worth greater than $10 million, or at least 10 times the total current decommissioning cost estimate (or the current amount required if certification is used), whichever is greater, for all decommissioning activities for which the company is responsible as self-guaranteeing licensee and as parent-guarantor;

b. assets located in the United States amounting to at least 90 percent of total assets or at least 10 times the total current decommissioning cost estimate (or the current amount required if certification is used) for all decommissioning activities for which the company is responsible as self-guaranteeing licensee and as parent-guarantor;

c. a ratio of cash flow divided by total liabilities greater than 0.15 and a ratio of total liabilities divided by net worth less than 1.5.

2. In addition, to pass the financial test, a company must meet all of the following requirements.

a. The company's independent certified public accountant must have compared the data used by the company in the financial test, which is required to be derived from the independently audited year-end financial statements, based on United States generally accepted accounting practices, for the latest fiscal year, with the amounts in such financial statements. In connection with that procedure, the licensee shall inform the department within 90 days of any matters that may cause the auditor to believe that the data specified in the financial test should be adjusted and that the company no longer passes the test.

b. After the initial financial test, the company shall repeat passage of the test within 90 days after the close of each succeeding fiscal year.

c. If the licensee no longer meets the requirements of Paragraph B.1 of this Appendix, the licensee shall send notice to the department of intent to establish alternative financial assurance as specified in department regulations. The notice shall be sent by certified mail, return receipt requested, within 90 days after the end of the fiscal year for which the year-end financial data show that the licensee no longer meets the financial test requirements. The licensee must provide alternative financial assurance within 120 days after the end of such fiscal year.

C. Company Self-Guarantee. The terms of a self-guarantee that an applicant or licensee furnishes must provide for the following.

1. The guarantee shall remain in force unless the licensee sends notice of cancellation by certified mail, return receipt requested, to the department. Cancellation may not occur until an alternative financial assurance mechanism is in place.

2. The licensee shall provide alternative financial assurance as specified in department regulations within 90 days following receipt by the department of a notice of cancellation of the guarantee.

3. The guarantee and financial test provisions shall remain in effect until the department has terminated the license or until another financial assurance method acceptable to the department has been put into effect by the licensee.

4. The applicant or licensee shall provide to the department a written guarantee (a written commitment by a corporate officer) that states that the licensee will fund and carry out the required decommissioning activities or, upon issuance of an order by the department, the licensee will set up and fund a trust in the amount of the current cost estimates for decommissioning.

Appendix F

Criteria Relating to Use of Financial Tests and Self-Guarantee For Providing Reasonable Assurance of Funds For Decommissioning by Nonprofit Colleges, Universities, and Hospitals

A. Introduction. An applicant or licensee may provide reasonable assurance of the availability of funds for decommissioning based on furnishing its own guarantee that funds will be available for decommissioning costs and on a demonstration that the applicant or licensee passes the financial test of Subsection B of this Appendix. The terms of the self-guarantee are in Subsection C of this Appendix. This Appendix establishes criteria for passing the financial test for the self-guarantee and establishes the terms for a self-guarantee.

B. Financial Test

1. For colleges and universities, to pass the financial test a college or university must meet either the criteria in Subparagraph B.1.a or the criteria in Subparagraph B.1.b of this Appendix:

a. for an applicant or licensee that issues bonds, a current rating for its most recent uninsured, uncollateralized, and unencumbered bond issuance of AAA, AA, or A as issued by Standard and Poors (S&P), or Aaa, Aa, or A as issued by Moodys;

b. for an applicant or licensee that does not issue bonds, unrestricted endowment consisting of assets located in the United States of at least $50 million, or at least 30 times the total current decommissioning cost estimate (or the current amount required if certification is used), whichever is greater, for all decommissioning activities for which the college or university is responsible as a self-guaranteeing licensee.

2. For hospitals, to pass the financial test a hospital must meet either the criteria in Subparagraph B.2.a or the criteria in Subparagraph B.2.b of this Appendix:

a. for an applicant or licensee that issues bonds, a current rating for its most recent uninsured, uncollateralized, and unencumbered bond issuance of AAA, AA, or A as issued by Standard and Poors (S&P), or Aaa, Aa, or A as issued by Moodys;

b. for an applicant or licensee that does not issue bonds, all of the following tests must be met:

i. total revenues less total expenditures, divided by total revenues, shall be equal to or greater than 0.04;

ii. long term debt divided by net fixed assets shall be less than or equal to 0.67;

iii. current assets and depreciation fund, divided by current liabilities, shall be greater than or equal to 2.55;

iv. operating revenues shall be at least 100 times the total current decommissioning cost estimate (or the current amount required if certification is used) for all decommissioning activities for which the hospital is responsible as a self-guaranteeing licensee.

3. In addition, to pass the financial test, a licensee must meet all of the following requirements.

a. The licensee's independent certified public accountant must have compared the data used by the licensee in the financial test, which is

required to be derived from the independently audited year-end financial statements, based on United States generally accepted accounting practices, for the latest fiscal year, with the amounts in such financial statements. In connection with that procedure, the licensee shall inform the department within 90 days of any matters coming to the attention of the auditor that cause the auditor to believe that the data specified in the financial test should be adjusted and that the licensee no longer passes the test.

b. After the initial financial test, the licensee shall repeat passage of the test within 90 days after the close of each succeeding fiscal year.

c. If the licensee no longer meets the requirements of Paragraph B of this Appendix, the licensee shall send notice to the department of its intent to establish alternative financial assurance as specified in department regulations. The notice shall be sent by certified mail, return receipt requested, within 90 days after the end of the fiscal year for which the year-end financial data show that the licensee no longer meets the financial test requirements. The licensee must provide alternate financial assurance within 120 days after the end of such fiscal year.

C. Self-Guarantee. The terms of a self-guarantee that an applicant or licensee furnishes must provide for the following.

1. The guarantee shall remain in force unless the licensee sends notice of cancellation by certified mail, and/or return receipt requested, to the department. Cancellation may not occur unless an alternative financial assurance mechanism is in place.

2. The licensee shall provide alternative financial assurance as specified in department regulations within 90 days following receipt by the department of a notice of cancellation of the guarantee.

3. The guarantee and financial test provisions shall remain in effect until the department has terminated the license or until another financial assurance method acceptable to the department has been put into effect by the licensee.

4. The applicant or licensee shall provide to the department a written guarantee (a written commitment by a corporate officer or officer of the institution) that states that the licensee will fund and carry out the required decommissioning activities or, upon issuance of an order by the department, the licensee will set up and fund a trust in the amount of the current cost estimates for decommissioning.

5. If, at any time, the licensee's most recent bond issuance ceases to be rated in any category of "A" or above by either Standard and Poors or Moodys, the licensee shall provide notice in writing of such fact to the department within 20 days after publication of the change by the rating service.

AUTHORITY NOTE: Promulgated in accordance with R.S. 30:2001 et seq.

HISTORICAL NOTE: Promulgated by the Department of Environmental Quality, Nuclear Energy Division, LR 13:569 (October 1987), amended by the Office of Air Quality and Radiation Protection, Radiation Protection Division, LR 18:34 (January 1992), LR 20:180 (February 1994), amended by the Office of Environmental Assessment, Environmental Planning Division, LR 26:2574 (November 2000), LR 27:1228 (August 2001), amended by the Office of Environmental Assessment, LR 31:46 (January 2005), LR 31:1580 (July 2005), amended by the Office of the Secretary, Legal Affairs Division, LR 31:2528 (October 2005), LR 32:820 (May 2006), LR 32:1853 (October 2006).

Chapter 4. Standards for Protection against Radiation

Subchapter A. General Provisions

§401. Purpose

A. This Chapter establishes standards for protection against ionizing radiation resulting from activities conducted pursuant to licenses or registrations issued by the department. These regulations are issued in accordance with R.S. 30:2101 et seq.

B. The requirements of this Chapter are designed to control the receipt, possession, use, transfer, and disposal of sources of radiation by any licensee or registrant so that the total dose to an individual, including doses resulting from all sources of radiation other than background radiation, does not exceed the standards for protection against radiation prescribed in this Chapter. However, nothing in this Chapter shall be construed as limiting actions that may be necessary to protect health and safety in an emergency.

AUTHORITY NOTE: Promulgated in accordance with R.S. 30:2001 et seq.

HISTORICAL NOTE: Promulgated by the Department of Environmental Quality, Nuclear Energy Division, LR 13:569 (October 1987), amended by the Office of Air Quality and Radiation Protection, Radiation Protection Division, LR 19:1421 (November 1993), LR 22:969 (October 1996), amended by the Office of Environmental Assessment, Environmental Planning Division, LR 26:2575 (November 2000).

§402. Scope

A. Except as specifically provided in other chapters of these regulations, this Chapter applies to persons licensed or registered by the department to receive, possess, use, transfer, or dispose of sources of radiation or to operate a production or utilization facility under these regulations. The limits in this Chapter do not apply to doses due to background radiation, to exposure from any medical administration the individual has received, to exposure from individuals administered radioactive material and released in accordance with LAC 33:XV.725, or to exposure from voluntary participation in medical research programs.

AUTHORITY NOTE: Promulgated in accordance with R.S. 30:2001 et seq.

HISTORICAL NOTE: Promulgated by the Department of Environmental Quality, Office of Air Quality and Radiation Protection, Radiation Protection Division, LR 19:1421 (November 1993), amended LR 24:2095 (November 1998), amended by the Office of Environmental Assessment, Environmental Planning Division, LR 26:2575 (November 2000).

§403. Definitions

A. As used in this Chapter, the following definitions apply.

Air-Purifying Respirator—a respirator with an air-purifying filter, cartridge, or canister that removes specific air contaminants by passing ambient air through the air-purifying element.

Annual Limit on Intake (ALI)—the derived limit for the amount of radioactive material taken into the body of an adult worker by inhalation or ingestion in a year. ALI is the smaller value of intake of a given radionuclide in a year by the reference man that would result in a committed effective dose equivalent of 0.05 Sv (5 rem) or a committed dose equivalent of 0.5 Sv (50 rem) to any individual organ or tissue. ALI values for intake by ingestion and by inhalation

of selected radionuclides are given in Table I, Columns 1 and 2, of LAC 33:XV.499.Appendix B.

Assigned Protection Factor (APF)—the expected work place level of respiratory protection that would be provided by a properly functioning respirator or a class of respirators to properly fitted and trained users. Operationally, the inhaled concentration can be estimated by dividing the ambient airborne concentration by the APF.

Atmosphere-Supplying Respirator—a respirator that supplies the respirator user with breathing air from a source independent of the ambient atmosphere and includes supplied-air respirators (SARS) and self-contained breathing apparatus (SCBA) units.

Class—a classification scheme for inhaled material according to its rate of clearance from the pulmonary region of the lung. Materials are classified as D, W, or Y, which applies to a range of clearance half-times: for Class D, days, of less than 10 days; for Class W, weeks, from 10 to 100 days; and for Class Y, years, of greater than 100 days. For purposes of these regulations, *lung class* and *inhalation class* are equivalent terms.

Constraint (Dose Constraint)—a value above which specified licensee actions are required.

Critical Group—the group of individuals reasonably expected to receive the greatest exposure to residual radioactivity for any applicable set of circumstances.

Declared Pregnant Woman—a woman who has voluntarily informed the licensee, in writing, of her pregnancy and the estimated date of conception. The declaration remains in effect until the declared pregnant woman withdraws the declaration in writing or is no longer pregnant.

Demand Respirator—an atmosphere-supplying respirator that admits breathing air to the facepiece only when a negative pressure is created inside the facepiece by inhalation.

Derived Air Concentration (DAC)—the concentration of a given radionuclide in air which, if breathed by the reference man for a working year of 2,000 hours under conditions of light work, results in an intake of one ALI. For purposes of these regulations, the condition of light work is an inhalation rate of 1.2 cubic meters of air per hour for 2,000 hours in a year. DAC values are given in Table I, Column 3, of LAC 33:XV.499.Appendix B.

Derived Air Concentration-Hour (DAC-Hour)—the product of the concentration of radioactive material in air, expressed as a fraction or multiple of the derived air concentration for each radionuclide, and the time of exposure to that radionuclide, in hours. A licensee or registrant may take 2,000 DAC-hours to represent one ALI, equivalent to a committed effective dose equivalent of 0.05 Sv (5 rem).

Disposable Respirator—a respirator for which maintenance is not intended and that is designed to be discarded after excessive breathing resistance, sorbent exhaustion, physical damage, or end-of-service-life renders it unsuitable for use. Examples of this type of respirator are a disposable half-mask respirator or a disposable escape-only self-contained breathing apparatus (SCBA).

Dosimetry Processor—an individual or an organization that processes and evaluates individual monitoring equipment in order to determine the radiation dose delivered to the monitoring equipment.

Filtering Facepiece (Dust Mask)—a negative pressure particulate respirator with a filter as an integral part of the facepiece or with the entire facepiece composed of the filtering medium that is not equipped with elastomeric sealing surfaces and adjustable straps.

Fit Factor—a quantitative estimate of the fit of a particular respirator to a specific individual, which typically estimates the ratio of the concentration of a substance in ambient air to its concentration inside the respirator when worn.

Fit Test—the use of a protocol to qualitatively or quantitatively evaluate the fit of a respirator on an individual.

Helmet—a rigid respiratory inlet covering that also provides head protection against impact and penetration.

Hood—a respiratory inlet covering that completely covers the head and neck and may also cover portions of the shoulders and torso.

Inhalation Class—see *Class*

Loose-Fitting Facepiece—a respiratory inlet covering that is designed to form a partial seal with the face.

Lung Class—see *Class*

Negative Pressure Respirator (Tight Fitting)—a respirator in which the air pressure inside the facepiece is negative during inhalation with respect to the ambient air pressure outside the respirator.

Nonstochastic Effect—a health effect, the severity of which varies with the dose and for which a threshold is believed to exist. Radiation-induced cataract formation is an example of a nonstochastic effect. For purposes of these regulations, *deterministic effect* is an equivalent term.

Planned Special Exposure—an infrequent exposure to radiation, separate from and in addition to the annual occupational dose limits.

Positive Pressure Respirator—a respirator in which the pressure inside the respiratory inlet covering exceeds the ambient air pressure outside the respirator.

Powered Air-Purifying Respirator (PAPR)—an air-purifying respirator that uses a blower to force the ambient air through air-purifying elements to the inlet covering.

Pressure Demand Respirator—a positive pressure atmosphere-supplying respirator that admits breathing air to the facepiece when the positive pressure is reduced inside the facepiece by inhalation.

Qualitative Fit Test (QLFT)—a pass/fail fit test to assess the adequacy of respirator fit that relies on the individual's response to the test agent.

Quantitative Fit Test (QNFT)—an assessment of the adequacy of respirator fit by numerically measuring the amount of leakage into the respirator.

Quarter—a period of time equal to ¼ of the year observed by the licensee, approximately 13 consecutive weeks, providing that the beginning of the first quarter in a year coincides with the starting date of the year and that no day is omitted or duplicated in consecutive quarters.

Reference Man—a hypothetical aggregation of human physical and physiological characteristics determined by international consensus. These characteristics may be used by researchers and public health employees to standardize results of experiments and to relate biological insult to a common base. A description of the reference man is contained in the International Commission on Radiological Protection Report, ICRP Publication 23, "Report of the Task Group on Reference Man."

Respiratory Protective Equipment—an apparatus, such as a respirator, used to reduce an individual's intake of airborne radioactive materials.

Sanitary Sewerage—a system of public sewers for carrying off wastewater and refuse, but excluding sewage treatment facilities, septic tanks, and leach fields owned or operated by the licensee or registrant.

Self-Contained Breathing Apparatus (SCBA)—an atmosphere-supplying respirator for which the breathing air source is designed to be carried by the user.

Stochastic Effect—a health effect that occurs randomly and for which the probability of the effect occurring, rather than its severity, is assumed to be a linear function of dose without threshold. Hereditary effects and cancer incidence are examples of stochastic effects. For purposes of these regulations, *probabilistic effect* is an equivalent term.

Supplied-Air Respirator (SAR) or *Airline Respirator*—an atmosphere-supplying respirator for which the source of breathing air is not designed to be carried by the user.

Tight-Fitting Facepiece—a respiratory inlet covering that forms a complete seal with the face.

User Seal Check (Fit Check)—an action conducted by the respirator user to determine if the respirator is properly seated to the face (e.g., negative pressure check, positive pressure check, irritant smoke test, or isoamyl acetate check).

Very High Radiation Area—an area, accessible to individuals, in which radiation levels external to the body could result in an individual receiving an absorbed dose in excess of 5 Gy (500 rad) in one hour at 1 meter from a source of radiation or from any surface that the radiation penetrates.[1]

Weighting Factor [w_T for an Organ or Tissue (T)]—the proportion of the risk of stochastic effects resulting from irradiation of that organ or tissue to the total risk of stochastic effects when the whole body is irradiated uniformly. For calculating the effective dose equivalent, the values of w_T are:

Organ Dose Weighting Factors	
Organ or Tissue	**w_T**
Gonads	0.25
Breast	0.15
Red Bone Marrow	0.12
Lung	0.12
Thyroid	0.03
Bone Surfaces	0.03
Remainder	0.30[a]
Whole Body	1.00[b]

[a] 0.30 results from 0.06 for each of five "remainder" organs, excluding the skin and the lens of the eye, that receive the highest doses.

[b] For the purpose of weighting the external whole body dose, for adding it to the internal dose, a single weighting factor, $w_T = 1.0$, has been specified. The use of other weighting factors for external exposure will be approved on a case-by-case basis until such time as specific guidance is issued.

[1]At very high doses received at high dose rates, units of absorbed dose (e.g., gray and rad) are appropriate, rather than units of dose equivalent (e.g., sievert and rem).

AUTHORITY NOTE: Promulgated in accordance with R.S. 30:2001 et seq.

HISTORICAL NOTE: Promulgated by the Department of Environmental Quality, Office of Air Quality and Radiation Protection, Radiation Protection Division, LR 19:1421 (November 1993), amended LR 22:969 (October 1996), amended by the Office of Environmental Assessment, Environmental Planning Division, LR 26:2768 (December 2000), LR 28:1011 (May 2002).

§404. Implementation

A. Any existing license or registration condition that is more restrictive than this Chapter remains in force until there is an amendment or renewal of the license or registration.

B. If a license or registration condition exempts a licensee or registrant from a provision of this Chapter in effect before January 1, 1994, it also exempts the licensee or registrant from the corresponding provision of this Chapter.

C. If a license or registration condition cites provisions of this Chapter in effect prior to January 1, 1994, which do not correspond to any provisions of this Chapter, the license or registration condition remains in force until there is an amendment or renewal of the license or registration that modifies or removes this condition.

AUTHORITY NOTE: Promulgated in accordance with R.S. 30:2001 et seq.

HISTORICAL NOTE: Promulgated by the Department of Environmental Quality, Office of Air Quality and Radiation Protection, Radiation Protection Division, LR 19:1421 (November 1993).

Subchapter B. Radiation Protection Programs

§406. Radiation Protection Programs

A. Each licensee or registrant shall develop, document, and implement a radiation protection program sufficient to ensure compliance with the provisions of this Chapter. See LAC 33:XV.471 for recordkeeping requirements relating to these programs.

B. The licensee or registrant shall use, to the extent practicable, procedures and engineering controls based upon sound radiation protection principles to achieve occupational doses and public doses that are as low as is reasonably achievable (ALARA).

C. The licensee or registrant shall, at intervals not to exceed 12 months, review the radiation protection program content and implementation.

D. To implement the ALARA requirements of Subsection B of this Section, and notwithstanding the requirements in LAC 33:XV.421, a constraint on air emissions of radioactive material to the environment, excluding radon-222 and its daughters, shall be established by licensees such that the individual member of the public likely to receive the highest dose will not be expected to receive a total effective dose equivalent in excess of 10 mrem (0.1 mSv) per year from these emissions. If a licensee subject to this requirement exceeds this dose constraint, the licensee shall report the exceedance as provided in LAC 33:XV.487 and promptly take appropriate corrective action to ensure against recurrence.

AUTHORITY NOTE: Promulgated in accordance with R.S. 30:2001 et seq.

HISTORICAL NOTE: Promulgated by the Department of Environmental Quality, Office of Air Quality and Radiation Protection, Radiation Protection Division, LR 19:1421 (November 1993), amended by the Office of Environmental Assessment, Environmental Planning Division, LR 26:2769 (December 2000).

§410. Occupational Dose Limits for Adults

A. The licensee or registrant shall control the occupational dose to individual adults, except for planned special exposures pursuant to LAC 33:XV.415, to the following dose limits:

1. an annual limit, which is the more limiting of:

a. the total effective dose equivalent being equal to 0.05 Sv (5 rem); or

b. the sum of the deep dose equivalent and the committed dose equivalent to any individual organ or tissue other than the lens of the eye being equal to 0.5 Sv (50 rem); and

2. the annual limits to the lens of the eye, to the skin of the whole body, and to the skin of the extremities, which are:

a. a lens dose equivalent of 0.15 Sv (15 rem); and

b. a shallow dose equivalent of 0.5 Sv (50 rem) to the skin of the whole body or to the skin of any extremity.

B. Doses received in excess of the annual limits, including doses received during accidents, emergencies, and planned special exposures, shall be subtracted from the limits for planned special exposures that the individual may receive during the current year and during the individual's lifetime. See LAC 33:XV.415.A.5.a and b.

C. The assigned deep dose equivalent must be for the part of the body receiving the highest exposure. The assigned shallow dose equivalent must be the dose averaged over the contiguous 10 square centimeters of skin receiving the highest exposure. The deep dose equivalent, lens dose equivalent, and shallow dose equivalent may be assessed from surveys or other radiation measurements for the purpose of demonstrating compliance with the occupational dose limits, if the individual monitoring device was not in the region of highest potential exposure or the results of individual monitoring are unavailable.

D. If a protective apron is worn while working with medical fluoroscopic equipment and monitoring is conducted as specified in LAC 33:XV.431, the effective dose equivalent for external radiation shall be determined using one of the following methods.

1. When only one individual monitoring device is used and it is located at the neck outside the protective apron, the reported deep dose equivalent shall be the effective dose equivalent for external radiation.

2. When only one individual monitoring device is used and it is located at the neck outside the protective apron, and the reported dose exceeds 25 percent of the limit specified in this Section, the reported deep dose equivalent value, multiplied by 0.3, shall be the effective dose equivalent for external radiation.

3. When individual monitoring devices are worn, both under the protective apron at the waist and outside the protective apron at the neck, the effective dose equivalent for external radiation shall be assigned the value of the sum of the deep dose equivalent reported for the individual monitoring device located at the waist under the protective apron, multiplied by 1.5, and the deep dose equivalent reported for the individual monitoring device located at the neck outside the protective apron, multiplied by 0.04.

E. Derived air concentration (DAC) and annual limit on intake (ALI) values are specified in Table I of LAC 33:XV.499.Appendix B and may be used to determine the individual's dose and to demonstrate compliance with the occupational dose limits. See LAC 33:XV.476.

F. Notwithstanding the annual dose limits, the licensee shall limit the soluble uranium intake by an individual to 10 milligrams in a week in consideration of chemical toxicity. See Endnote 3 of LAC 33:XV.499.Appendix B.

G. The licensee or registrant shall reduce the dose that an individual may be allowed to receive in the current year by

the amount of occupational dose received while employed by any other person. See LAC 33:XV.414.E and F.

AUTHORITY NOTE: Promulgated in accordance with R.S. 30:2001 et seq.

HISTORICAL NOTE: Promulgated by the Department of Environmental Quality, Nuclear Energy Division, LR 13:569 (October 1987), amended by the Office of Air Quality and Radiation Protection, Radiation Protection Division, LR 19:1421 (November 1993), LR 22:969 (October 1996), amended by the Office of Environmental Assessment, Environmental Planning Division, LR 26:2769 (December 2000), LR 30:1188 (June 2004).

§411. Compliance with Requirements for Summation of External and Internal Doses

A. If the licensee or registrant is required to monitor pursuant to LAC 33:XV.431.A and B, the licensee or registrant shall demonstrate compliance with the dose limits by summing external and internal doses. If the licensee or registrant is required to monitor only pursuant to LAC 33:XV.431.A or only pursuant to LAC 33:XV.431.B, then summation is not required to demonstrate compliance with the dose limits. The licensee or registrant may demonstrate compliance with the requirements for summation of external and internal doses pursuant to LAC 33:XV.411.B, C, and D. The dose equivalents for the lens of the eye, the skin, and the extremities are not included in the summation, but are subject to separate limits.

B. Intake by Inhalation. If the only intake of radionuclides is by inhalation, the total effective dose equivalent limit is not exceeded if the sum of the deep dose equivalent divided by the total effective dose equivalent limit, and any one of the following, does not exceed unity:

1. the sum of the fractions of the inhalation ALI for each radionuclide;

2. the total number of derived air concentration-hours (DAC-hours) for all radionuclides divided by 2,000; or

3. the sum of the calculated committed effective dose equivalents (CEDE) to all significantly irradiated organs or tissues (T) calculated from bioassay data using appropriate biological models and expressed as a fraction of the annual limit. For purposes of this requirement, an organ or tissue is deemed to be significantly irradiated if, for that organ or tissue, the product of the weighting factors, w_T, and the committed dose equivalent, $H_{T,50}$, per unit intake is greater than 10 percent of the maximum weighted value of $H_{T,50}$, that is, $w_T H_{T,50}$, per unit intake for any organ or tissue.

C. Intake by Oral Ingestion. If the occupationally exposed individual receives an intake of radionuclides by oral ingestion greater than 10 percent of the applicable oral ALI, the licensee or registrant shall account for this intake and include it in demonstrating compliance with the limits.

D. Intake through Wounds or Absorption through Skin. The licensee or registrant shall evaluate and, to the extent practical, account for intakes through wounds or skin absorption. The intake through intact skin has been included in the calculation of DAC for hydrogen-3 and does not need to be evaluated or accounted for pursuant to this Subsection.

AUTHORITY NOTE: Promulgated in accordance with R.S. 30:2001 et seq.

HISTORICAL NOTE: Promulgated by the Department of Environmental Quality, Nuclear Energy Division, LR 13:569 (October 1987), amended by the Office of Air Quality and Radiation Protection, Radiation Protection Division, LR 19:1421 (November 1993), LR 22:970 (October 1996).

§412. Determination of External Dose from Airborne Radioactive Material

A. Licensees or registrants shall, when determining the dose from airborne radioactive material, include the contribution to the deep dose equivalent, lens dose equivalent, and shallow dose equivalent from external exposure to the radioactive cloud. See LAC 33:XV.499.Appendix B, Endnotes 1 and 2.

B. Airborne radioactivity measurements and DAC values shall not be used as the primary means to assess the deep dose equivalent when the airborne radioactive material includes radionuclides other than noble gases or if the cloud of airborne radioactive material is not relatively uniform. The determination of the deep dose equivalent to an individual shall be based upon measurements using instruments or individual monitoring devices.

AUTHORITY NOTE: Promulgated in accordance with R.S. 30:2001 et seq.

HISTORICAL NOTE: Promulgated by the Department of Environmental Quality, Nuclear Energy Division, LR 13:569 (October 1987), amended by the Office of Air Quality and Radiation Protection, Radiation Protection Division, LR 19:1421 (November 1993), amended by the Office of Environmental Assessment, Environmental Planning Division, LR 26:2769 (December 2000).

§413. Determination of Internal Exposure

A. For purposes of assessing dose used to determine compliance with occupational dose equivalent limits, the licensee or registrant shall, when required pursuant to LAC 33:XV.431, take suitable and timely measurements of:

1. concentrations of radioactive materials in air in work areas;

2. quantities of radionuclides in the body;

3. quantities of radionuclides excreted from the body; or

4. combinations of these measurements.

B. Unless respiratory protective equipment is used, as provided in LAC 33:XV.442, or the assessment of intake is based on bioassays, the licensee or registrant shall assume that an individual inhales radioactive material at the airborne concentration in which the individual is present.

C. When specific information on the physical and biochemical properties of the radionuclides taken into the body or the behavior of the material in an individual is known, the licensee or registrant may:

1. use that information to calculate the committed effective dose equivalent, and if used, the licensee or

registrant shall document that information in the individual's record;

2. upon prior approval of the department, adjust the DAC or ALI values to reflect the actual physical and chemical characteristics of airborne radioactive material, for example, aerosol size distribution or density; and

3. separately assess the contribution of fractional intakes of Class D, W, or Y compounds of a given radionuclide to the committed effective dose equivalent. See LAC 33:XV.499.Appendix B.

D. If the licensee or registrant chooses to assess intakes of Class Y material using the measurements given in LAC 33:XV.413.A.2 or 3, the licensee or registrant may delay the recording and reporting of the assessments for periods up to seven months, unless otherwise required by LAC 33:XV.486 or 487. This delay permits the licensee or registrant to make additional measurements basic to the assessments.

E. If the identity and concentration of each radionuclide in a mixture are known, the fraction of the DAC applicable to the mixture for use in calculating DAC-hours shall be either:

1. the sum of the ratios of the concentration to the appropriate DAC value (that is, D, W, or Y) from LAC 33:XV.499.Appendix B for each radionuclide in the mixture; or

2. the ratio of the total concentration for all radionuclides in the mixture to the most restrictive DAC value for any radionuclide in the mixture.

F. If the identity of each radionuclide in a mixture is known, but the concentration of one or more of the radionuclides in the mixture is not known, the DAC for the mixture shall be the most restrictive DAC of any radionuclide in the mixture.

G. When a mixture of radionuclides in air exists, a licensee or registrant may disregard certain radionuclides in the mixture if:

1. the licensee or registrant uses the total activity of the mixture in demonstrating compliance with the dose limits in LAC 33:XV.410 and in complying with the monitoring requirements in LAC 33:XV.431.B;

2. the concentration of any radionuclide disregarded is less than 10 percent of its DAC; and

3. the sum of these percentages for all of the radionuclides disregarded in the mixture does not exceed 30 percent.

H. When determining the committed effective dose equivalent, the following information may be considered:

1. in order to calculate the committed effective dose equivalent, the licensee or registrant may assume that the inhalation of one ALI, or an exposure of 2,000 DAC-hours, results in a committed effective dose equivalent of 0.05 Sv (5 rem) for radionuclides that have their ALIs or DACs based on the committed effective dose equivalent; and

2. for an ALI and the associated DAC determined by the nonstochastic organ dose limit of 0.5 Sv (50 rem), the intake of radionuclides that would result in a committed effective dose equivalent of 0.05 Sv (5 rem), that is, the stochastic ALI is listed in parentheses in Table I of LAC 33:XV.499.Appendix B. The licensee or registrant may, as a simplifying assumption, use the stochastic ALI to determine committed effective dose equivalent. However, if the licensee or registrant uses the stochastic ALI, the licensee or registrant shall also demonstrate that the limit in LAC 33:XV.410.A.1.b is met.

AUTHORITY NOTE: Promulgated in accordance with R.S. 30:2001 et seq.

HISTORICAL NOTE: Promulgated by the Department of Environmental Quality, Nuclear Energy Division, LR 13:569 (October 1987), amended by the Office of Air Quality and Radiation Protection, Radiation Protection Division, LR 19:1421 (November 1993), amended by the Office of Environmental Assessment, Environmental Planning Division, LR 26:2575 (November 2000).

§414. Determination of Prior Occupational Dose

A. For each individual who is likely to receive, in a year, an occupational dose requiring monitoring in accordance with LAC 33:XV.431, the licensee or registrant shall:

1. determine the occupational radiation dose received during the current year; and

2. attempt to obtain the records of lifetime cumulative occupational radiation dose.

B. Prior to permitting an individual to participate in a planned special exposure, the licensee or registrant shall determine:

1. the internal and external doses from all previous planned special exposures; and

2. all doses in excess of the limits, including doses received during accidents and emergencies, received during the lifetime of the individual.

C. In complying with the requirements of LAC 33:XV.414.A, a licensee or registrant may:

1. accept, as a record of the occupational dose that the individual received during the current year, a written signed statement from the individual, or from the individual's most recent employer for work involving radiation exposure, that discloses the nature and the amount of any occupational dose that the individual received during the current year;

2. accept, as the record of lifetime cumulative radiation dose, an up-to-date department Form DRC-4 or equivalent, signed by the individual and countersigned by an appropriate official of the most recent employer for work involving radiation exposure or the individual's current employer, if the individual is not employed by the licensee or registrant; and

3. obtain reports of the individual's dose equivalent from the most recent employer for work involving radiation exposure or the individual's current employer, if the individual is not employed by the licensee or registrant, by

telephone, telegram, facsimile, or letter. The licensee or registrant shall request a written verification of the dose data if the authenticity of the transmitted report cannot be established.

D. The licensee or registrant shall record the exposure history, as required by LAC 33:XV.414.A, on department Form DRC-4, or other clear and legible record, of all the information required on that form. The form or record shall show each period in which the individual received occupational exposure to radiation or radioactive material and shall be signed by the individual who received the exposure. For each period for which the licensee or registrant obtains reports, the licensee or registrant shall use the dose shown in the report in preparing department Form DRC-4 or equivalent. For any period in which the licensee or registrant does not obtain a report, the licensee or registrant shall place a notation on department Form DRC-4 or equivalent indicating the periods of time for which data are not available.

E. Licensees or registrants are not required to partition the historical dose between external dose equivalent(s) and internal committed dose equivalent(s). Further, occupational exposure histories obtained and recorded on department Form DRC-4 or equivalent before January 1, 1994, may not have included effective dose equivalent, but may be used in the absence of specific information on the intake of radionuclides by the individual.

F. If the licensee or registrant is unable to obtain a complete record of an individual's current and previously accumulated occupational dose, the licensee or registrant shall assume:

1. in establishing administrative controls pursuant to LAC 33:XV.410.F for the current year, that the allowable dose limit for the individual is reduced by 12.5 mSv (1.25 rem) for each quarter for which records were unavailable and the individual was engaged in activities that could have resulted in occupational radiation exposure; and

2. that the individual is not available for planned special exposures.

G. The licensee or registrant shall retain the records on department Form DRC-4 or equivalent until the department terminates each pertinent license or registration requiring this record. The licensee or registrant shall retain records used in preparing department Form DRC-4 or equivalent for three years after the record is made.

AUTHORITY NOTE: Promulgated in accordance with R.S. 30:2001 et seq.

HISTORICAL NOTE: Promulgated by the Department of Environmental Quality, Nuclear Energy Division, LR 13:569 (October 1987), amended by the Office of Air Quality and Radiation Protection, Radiation Protection Division, LR 19:1421 (November 1993), LR 22:970 (October 1996), LR 24:2095 (November 1998), amended by the Office of Environmental Assessment, Environmental Planning Division, LR 26:2575 (November 2000).

§415. Planned Special Exposures

A. A licensee or registrant may authorize an adult worker to receive doses in addition to and accounted for separately from the doses received under the limits specified in LAC 33:XV.410 provided that each of the following conditions is satisfied:

1. the licensee or registrant authorizes a planned special exposure only in an exceptional situation when alternatives that might avoid the higher exposure are unavailable or impractical;

2. the licensee or registrant, and employer if the employer is not the licensee or registrant, specifically authorizes the planned special exposure, in writing, before the exposure occurs;

3. before a planned special exposure, the licensee or registrant ensures that each individual involved is:

a. informed of the purpose of the planned operation;

b. informed of the estimated doses and associated potential risks and specific radiation levels or other conditions that might be involved in performing the task; and

c. instructed in the measures to be taken to keep the dose ALARA considering other risks that may be present;

4. prior to permitting an individual to participate in a planned special exposure, the licensee or registrant ascertains prior doses as required by LAC 33:XV.414.B during the lifetime of the individual for each individual involved;

5. subject to LAC 33:XV.410.B, the licensee or registrant shall not authorize a planned special exposure that would cause an individual to receive a dose from all planned special exposures and all doses in excess of the limits to exceed:

a. the numerical values of any of the dose limits in LAC 33:XV.410.A in any year; and

b. five times the annual dose limits in LAC 33:XV.410.A during the individual's lifetime;

6. the licensee or registrant maintains records of the conduct of a planned special exposure in accordance with LAC 33:XV.475 and submits a written report in accordance with LAC 33:XV.488; and

7. the licensee or registrant records the best estimate of the dose resulting from the planned special exposure in the individual's record and informs the individual, in writing, of the dose within 30 days from the date of the planned special exposure. The dose from planned special exposures shall not be considered in controlling future occupational dose of the individual pursuant to LAC 33:XV.410.A but shall be included in evaluations required by LAC 33:XV.415.A.4 and 5.

AUTHORITY NOTE: Promulgated in accordance with R.S. 30:2001 et seq.

HISTORICAL NOTE: Promulgated by the Department of Environmental Quality, Nuclear Energy Division, LR 13:569 (October 1987), amended by the Office of Air Quality and Radiation Protection, Radiation Protection Division, LR 19:1421 (November 1993).

§416. Occupational Dose Limits for Minors

A. The annual occupational dose limits for minors are 10 percent of the annual occupational dose limits specified for adult workers in LAC 33:XV.410.

AUTHORITY NOTE: Promulgated in accordance with R.S. 30:2001 et seq.

HISTORICAL NOTE: Promulgated by the Department of Environmental Quality, Nuclear Energy Division, LR 13:569 (October 1987), amended by the Office of Air Quality and Radiation Protection, Radiation Protection Division, LR 19:1421 (November 1993).

§417. Dose to an Embryo/Fetus

A. The licensee or registrant shall ensure that the dose equivalent to the embryo/fetus during the entire pregnancy, due to occupational exposure of a declared pregnant woman, does not exceed 5 mSv (0.5 rem). See LAC 33:XV.476 for recordkeeping requirements.

B. The licensee or registrant shall make efforts to avoid substantial variation[2] above a uniform monthly exposure rate to a declared pregnant woman so as to satisfy the limit in Subsection A of this Section.

C. The dose equivalent to the embryo/fetus shall be taken as the sum of:

1. the dose equivalent to the embryo/fetus from radionuclides in the embryo/fetus and radionuclides in the declared pregnant woman; and

2. the dose that is most representative of the dose equivalent to the embryo/fetus from external radiation, that is, in the mother's lower torso region, determined as follows:

a. if multiple measurements have not been made, assignment of the highest deep dose equivalent for the declared pregnant woman shall be the dose equivalent to the embryo/fetus, in accordance with LAC 33:XV.414.C; or

b. if multiple measurements have been made, the dose equivalent to the embryo/fetus shall be the assignment of the deep dose equivalent for the declared pregnant woman from the individual monitoring device which is most representative of the dose equivalent to the embryo/fetus. Assignment of the highest deep dose equivalent for the declared pregnant woman to the embryo/fetus is not required unless that dose is also the most representative deep dose equivalent for the region of the embryo/fetus.

D. If by the time the woman declares pregnancy to the licensee or registrant, the dose equivalent to the embryo/fetus has exceeded 4.5 mSv (0.45 rem), the licensee or registrant shall be deemed to be in compliance with Subsection A of this Section if the additional dose equivalent to the embryo/fetus does not exceed 0.5 mSv (0.05 rem) during the remainder of the pregnancy.[2]

[2]The National Council on Radiation Protection and Measurements recommended in NCRP Report No. 91, "Recommendations on Limits for Exposure to Ionizing Radiation" (June 1, 1987), that no more than 0.5 mSv (0.05 rem) to the embryo/fetus be received in any one month.

AUTHORITY NOTE: Promulgated in accordance with R.S. 30:2001 et seq.

HISTORICAL NOTE: Promulgated by the Department of Environmental Quality, Nuclear Energy Division, LR 13:569 (October 1987), amended by the Office of Air Quality and Radiation Protection, Radiation Protection Division, LR 19:1421 (November 1993), LR 22:970 (October 1996), amended by the Office of Environmental Assessment, Environmental Planning Division, LR 26:2769 (December 2000).

§421. Radiation Dose Limits for Individual Members of the Public

A. Each licensee or registrant shall conduct operations so that:

1. except as provided in Paragraph A.3 of this Section, the total effective dose equivalent (TEDE) to individual members of the public from the licensed or registered operation does not exceed 1 mSv (0.1 rem) in a year, exclusive of the dose contribution from background radiation, any medical administration the individual has received, voluntary participation in medical research programs, exposure to individuals administered radioactive material and released in accordance with LAC 33:XV.725, and the licensee's or registrant's disposal of radioactive material into sanitary sewerage in accordance with LAC 33:XV.462[3];

2. the dose in any unrestricted area from external sources, exclusive of the dose contributions from individuals administered radioactive material and released in accordance with LAC 33:XV.725, does not exceed 0.02 mSv (0.002 rem) in any one hour; and

3. the TEDE to individual members of the public from infrequent exposure to radiation from radiation machines does not exceed 5mSv (0.5 rem).

B. If the licensee or registrant permits members of the public to have access to controlled areas, the radiation dose limits for members of the public continue to apply to those individuals.

C. A licensee, registrant, or an applicant for a license or registration may apply for prior department authorization to operate up to an annual dose limit for an individual member of the public of 5 mSv (0.5 rem). This application shall include the following information:

1. demonstration of the need for and the expected duration of operations in excess of the limit in LAC 33:XV.421.A; and

2. the licensee's or registrant's program to assess and control dose within the 5 mSv (0.5 rem) annual limit; and

3. the procedures to be followed to maintain the dose ALARA.

D. In addition to the requirements of this Chapter, a licensee or registrant subject to the provisions of the U.S.

Environmental Protection Agency's generally applicable environmental radiation standards in 40 CFR Part 190 shall comply with those standards.

E. The department may impose additional restrictions on radiation levels in unrestricted areas and on the total quantity of radionuclides that a licensee or registrant may release in effluents in order to restrict the collective dose.

F. Each licensee or registrant shall conduct operations so that, notwithstanding Paragraph A.1 of this Section, a licensee or registrant may permit a visitor to an individual who cannot be released, under LAC 33:XV.725, to receive a radiation dose greater than 0.1 rem (1 mSv) if:

1. the radiation dose received does not exceed 0.5 rem (5 mSv); and

2. the *authorized user*, as defined in LAC 33:XV.102, has determined before the visit that it is appropriate.

[3]Retrofit shall not be required for locations within facilities where only radiation machines existed prior to January 1, 1994, and met the previous requirements of 5 mSv (0.5 rem) in a year.

AUTHORITY NOTE: Promulgated in accordance with R.S. 30:2001 et seq.

HISTORICAL NOTE: Promulgated by the Department of Environmental Quality, Nuclear Energy Division, LR 13:569 (October 1987), amended by the Office of Air Quality and Radiation Protection, Radiation Protection Division, LR 19:1421 (November 1993), LR 22:970 (October 1996), LR 24:2095 (November 1998), repromulgated LR 24:2243 (December 1998), amended by the Office of Environmental Assessment, Environmental Planning Division, LR 26:2576 (November 2000), amended by the Office of Environmental Assessment, LR 31:48 (January 2005), amended by the Office of the Secretary, Legal Affairs Division, LR 32:811 (May 2006).

§422. Compliance with Dose Limits for Individual Members of the Public

A. The licensee or registrant shall make, or cause to be made, surveys of radiation levels in unrestricted areas and radioactive materials in effluents released to unrestricted areas to demonstrate compliance with the dose limits for individual members of the public in LAC 33:XV.421.

B. A licensee or registrant shall show compliance with the annual dose limit, as specified in LAC 33:XV.421, by:

1. demonstrating by measurement or calculation that the TEDE to the individual likely to receive the highest dose from the licensed or registered operation does not exceed the annual dose limit; or

2. demonstrating that:

a. the annual average concentrations of radioactive material released in gaseous and liquid effluents at the boundary of the unrestricted area do not exceed the values specified in Table II of LAC 33:XV.499.Appendix B; and

b. if an individual were continuously present in an unrestricted area, the dose from external sources would not exceed 0.02 mSv (0.002 rem) in an hour and 0.5 mSv (0.05 rem) in a year.

C. Upon approval from the department, the licensee or registrant may adjust the effluent concentration values in LAC 33:XV.499.Appendix B, Table II, for members of the public, to take into account the actual physical and chemical characteristics of the effluents, such as aerosol size distribution, solubility, density, radioactive decay equilibrium, and chemical form.

AUTHORITY NOTE: Promulgated in accordance with R.S. 30:2001 et seq.

HISTORICAL NOTE: Promulgated by the Department of Environmental Quality, Nuclear Energy Division, LR 13:569 (October 1987), amended by the Office of Air Quality and Radiation Protection, Radiation Protection Division, LR 19:1421 (November 1993), LR 22:971 (October 1996), amended by the Office of Environmental Assessment, Environmental Planning Division, LR 26:2576 (November 2000).

§426. Testing for Leakage or Contamination of Sealed Sources

A. The licensee or registrant in possession of any sealed source shall assure that:

1. each sealed source, except as specified in LAC 33:XV.426.B, is tested for leakage or contamination and the test results are received before the sealed source is put into use, unless the licensee or registrant has a certificate from the transferor indicating that the sealed source was tested within six months before transfer to the licensee or registrant;

2. each sealed source that is designed not to emit alpha particles is tested for leakage or contamination at intervals not to exceed six months or at alternative intervals approved by the department, after evaluation of information specified by LAC 33:XV.328.L.2, an agreement state, a licensing state, or the Nuclear Regulatory Commission;

3. each sealed source that is designed to emit alpha particles is tested for leakage or contamination at intervals not to exceed three months or at alternative intervals approved by the department, after evaluation of information specified by LAC 33:XV.328.L.2, an agreement state, a licensing state, or the Nuclear Regulatory Commission;

4. for each sealed source that is required to be tested for leakage or contamination, at any other time there is reason to suspect that the sealed source might have been damaged or might be leaking, the licensee or registrant shall assure that the sealed source is tested for leakage or contamination before further use;

5. tests for leakage for all sealed sources, except brachytherapy sources manufactured to contain radium, shall be capable of detecting the presence of 185 Bq (0.005 μCi) of radioactive material on a test sample. Test samples shall be taken from the sealed source or from the surfaces of the container in which the sealed source is stored or mounted on which one might expect contamination to accumulate. For a sealed source contained in a device, test samples are obtained when the source is in the "off" position;

6. the test for leakage for brachytherapy sources manufactured to contain radium shall be capable of detecting

an absolute leakage rate of 37 Bq (0.001 μCi) of radon-222 in a 24-hour period when the collection efficiency for radon-222 and its daughters has been determined with respect to collection method, volume, and time; and

7. tests for contamination from radium daughters shall be taken on the interior surface of brachytherapy source storage containers and shall be capable of detecting the presence of 185 Bq (0.005 μCi) of a radium daughter which has a half-life greater than four days.

B. A licensee or registrant need not perform tests for leakage or contamination on the following sealed sources:

1. sealed sources containing only radioactive material with a half-life of less than 30 days;

2. sealed sources containing only radioactive material as a gas;

3. sealed sources containing 3.7 MBq (100 μCi) or less of beta or photon-emitting material or 370 kBq (10 μCi) or less of alpha-emitting material;

4. sealed sources containing only hydrogen-3;

5. seeds of iridium-192 encased in nylon ribbon; and

6. sealed sources, except teletherapy and brachytherapy sources, which are stored, not being used, and identified as in storage. The licensee or registrant shall, however, test each such sealed source for leakage or contamination and receive the test results before any use or transfer, unless it has been tested for leakage or contamination within six months before the date of use or transfer.

C. Tests for leakage or contamination from sealed sources shall be performed by persons specifically authorized by the department, an agreement state, a licensing state, or the U.S. Nuclear Regulatory Commission to perform such services.

D. Test results shall be kept in units of becquerel or microcurie and maintained for inspection by the department. Records of test results for sealed sources shall be made in accordance with LAC 33:XV.473.

E. The following shall be considered evidence that a sealed source is leaking:

1. the presence of 185 Bq (0.005 μCi) or more of removable contamination on any test sample;

2. leakage of 37 Bq (0.001 μCi) of radon-222 per 24 hours for brachytherapy sources manufactured to contain radium; and

3. the presence of removable contamination resulting from the decay of 185 Bq (0.005 μCi) or more of radium.

F. The licensee or registrant shall immediately withdraw a leaking sealed source from use and shall take action to prevent the spread of contamination. The leaking sealed source shall be repaired or disposed of in accordance with this Chapter.

G. Reports of test results for leaking or contaminated sealed sources shall be made pursuant to LAC 33:XV.492.

AUTHORITY NOTE: Promulgated in accordance with R.S. 30:2001 et seq.

HISTORICAL NOTE: Promulgated by the Department of Environmental Quality, Nuclear Energy Division, LR 13:569 (October 1987), amended by the Office of Air Quality and Radiation Protection, Radiation Protection Division, LR 19:1421 (November 1993), LR 22:971 (October 1996), amended by the Office of Environmental Assessment, Environmental Planning Division, LR 26:2576 (November 2000).

Subchapter C. Surveys and Monitoring

§430. General

A. Each licensee or registrant shall make, or cause to be made, surveys that:

1. are necessary for the licensee or registrant to comply with this Chapter; and

2. are necessary under the circumstances to evaluate:

a. radiation levels;

b. concentrations or quantities of radioactive material; and

c. the potential radiological hazards that could be present.

B. The licensee or registrant shall ensure that instruments and equipment used for quantitative radiation measurements, for example, dose rate and effluent monitoring, are calibrated at intervals not to exceed 12 months, except when a more frequent interval is specified in another applicable chapter of these regulations or a license condition.

C. Personnel Dosimeter Processing

1. All personnel dosimeters, except for direct and indirect reading pocket ionization chambers and those dosimeters used to measure the dose to any extremity, that require processing to determine the radiation dose and that are used by licensees and registrants to comply with LAC 33:XV.410, with other applicable provisions of these regulations, or with conditions specified in a license or registration shall be processed and evaluated by a dosimetry processor:

a. holding current personnel dosimetry accreditation from the National Voluntary Laboratory Accreditation Program (NVLAP) of the National Institute of Standards and Technology; and

b. approved in this accreditation process for the type of radiation or radiations included in the NVLAP program that most closely approximates the type of radiation or radiations for which the individual wearing the dosimeter is monitored.

2. Dosimetry reports received from the processor must be recorded and maintained indefinitely or until the Office of Environmental Compliance, Emergency and Radiological Services Division, terminates the license.

D. The licensee or registrant shall ensure that adequate precautions are taken to prevent a deceptive exposure of an individual monitoring device.

AUTHORITY NOTE: Promulgated in accordance with R.S. 30:2001 et seq.

HISTORICAL NOTE: Promulgated by the Department of Environmental Quality, Office of Air Quality and Radiation Protection, Radiation Protection Division, LR 19:1421 (November 1993), amended LR 20:653 (June 1994), LR 22:971 (October 1996), amended by the Office of Environmental Assessment, Environmental Planning Division, LR 29:1468 (August 2003), amended by the Office of the Secretary, Legal Affairs Division, LR 31:2529 (October 2005).

§431. Conditions Requiring Individual Monitoring of External and Internal Occupational Dose

Each licensee or registrant shall monitor exposures from sources of radiation at levels sufficient to demonstrate compliance with the occupational dose limits of this Chapter.

A. Each licensee or registrant shall monitor occupational exposure to radiation and shall supply and require the use of individual monitoring devices by:

1. adults likely to receive, in one year from sources external to the body, a dose in excess of 10 percent of the limits specified in LAC 33:XV.410.A;

2. minors and declared pregnant women likely to receive, in one year from sources external to the body, a dose in excess of 10 percent of any of the applicable limits specified in LAC 33:XV.416 or 417;

3. individuals entering a "high" or "very high" radiation area; and

4. individuals working with medical fluoroscopic equipment, who will locate monitoring devices as follows:

a. an individual monitoring device used to determine the dose equivalent to an embryo/fetus of a declared pregnant woman, in accordance with LAC 33:XV.417, shall be located under the protective apron at the waist;

b. an individual monitoring device used to determine lens dose equivalent shall be located at the neck, or an unshielded location closer to the eye, outside the protective apron; and

c. when only one individual monitoring device is issued to determine the effective dose equivalent for external radiation in accordance with LAC 33:XV.410.C.2, it shall be located at the neck outside the protective apron. When a second individual monitoring device is used for the same purpose, it shall be located under the protective apron at the waist. The second individual monitoring device is required for a declared pregnant woman.

B. Each licensee or registrant shall monitor, to determine compliance with LAC 33:XV.413, the occupational intake of radioactive material by and assess the committed effective dose equivalent (CEDE) to:

1. adults likely to receive, in one year, an intake in excess of 10 percent of the applicable ALI in Table I, Columns 1 and 2, of LAC 33:XV.499.Appendix B; and

2. minors and declared pregnant women likely to receive, in one year, a committed effective dose equivalent in excess of 0.5 mSv (0.05 rem).

AUTHORITY NOTE: Promulgated in accordance with R.S. 30:2001 et seq.

HISTORICAL NOTE: Promulgated by the Department of Environmental Quality, Nuclear Energy Division, LR 13:569 (October 1987), amended by the Office of Air Quality and Radiation Protection, Radiation Protection Division, LR 19:1421 (November 1993), LR 22:971 (October 1996), amended by the Office of Environmental Assessment, Environmental Planning Division, LR 26:2770 (December 2000).

§432. Location of Individual Monitoring Devices

A. Each licensee or registrant shall ensure that individuals who are required to monitor occupational doses in accordance with LAC 33:XV.431.A wear individual monitoring devices as follows:

1. an individual monitoring device used for monitoring the dose to the whole body shall be worn at the unshielded location of the whole body likely to receive the highest exposure. When a protective apron is worn, the location of the individual monitoring device is typically at the neck (collar);

2. an individual monitoring device used for monitoring the dose equivalent to the embryo/fetus of a declared pregnant woman, in accordance with LAC 33:XV.417.A, shall be located at the waist under any protective apron being worn by the woman;

3. an individual monitoring device used for monitoring the lens dose equivalent, to demonstrate compliance with LAC 33:XV.410.A.2.a, shall be located at the neck (collar), outside any protective apron being worn by the monitored individual, or at an unshielded location closer to the eye; and

4. an individual monitoring device used for monitoring the dose to the extremities, to demonstrate compliance with LAC 33:XV.410.A.2.b, shall be worn on the extremity likely to receive the highest exposure. Each individual monitoring device shall be oriented to measure the highest dose to the extremity being monitored.

AUTHORITY NOTE: Promulgated in accordance with R.S. 30:2001 et seq.

HISTORICAL NOTE: Promulgated by the Department of Environmental Quality, Nuclear Energy Division, LR 13:569 (October 1987), amended by the Office of Air Quality and Radiation Protection, Radiation Protection Division, LR 22:972 (October 1996), amended by the Office of Environmental Assessment, Environmental Planning Division, LR 26:2770 (December 2000).

Subchapter D. Control of Exposure From External Sources in Restricted Areas

§436. Control of Access to High Radiation Areas

A. The licensee or registrant shall ensure that each entrance or access point to a high radiation area has one or more of the following features:

1. a control device that, upon entry into the area, causes the level of radiation to be reduced below that level at which an individual might receive a deep dose equivalent of 1 mSv (0.1 rem) in one hour at 30 centimeters from the source of radiation or from any surface that the radiation penetrates;

2. a control device that energizes a conspicuous visible or audible alarm signal so that the individual entering the high radiation area and the supervisor of the activity are made aware of the entry; or

3. entryways that are locked, except during periods when access to the areas is required, with positive control over each individual entry.

B. In place of the controls required by LAC 33:XV.436.A for a high radiation area, the licensee or registrant may substitute continuous direct or electronic surveillance that is capable of preventing unauthorized entry.

C. The licensee or registrant may apply to the Office of Environmental Compliance, Emergency and Radiological Services Division, for approval of alternative methods for controlling access to high radiation areas.

D. The licensee or registrant shall establish the controls required by LAC 33:XV.436.A and C in a way that does not prevent individuals from leaving a high radiation area.

E. The licensee or registrant is not required to control each entrance or access point to a room or other area that is a high radiation area solely because of the presence of radioactive materials prepared for transport and packaged and labeled in accordance with the regulations of the U.S. Department of Transportation provided that:

1. the packages do not remain in the area longer than three days; and

2. the dose rate at 1 meter from the external surface of any package does not exceed 0.1 mSv (0.01 rem) per hour.

F. The licensee or registrant is not required to control entrance or access to rooms or other areas in hospitals solely because of the presence of patients containing radioactive material, provided that there are personnel in attendance who are taking the necessary precautions to prevent the exposure of individuals to radiation or radioactive material in excess of the established limits in this Chapter and to operate within the ALARA provisions of the licensee's or registrant's radiation protection program.

G. The registrant is not required to control entrance or access to rooms or other areas containing sources of radiation capable of producing a high radiation area as described in LAC 33:XV.436 if the registrant has met all the specific requirements for access and control specified in other applicable chapters of these regulations, such as, LAC 33:XV.Chapter 5 for industrial radiography, Chapter 6 for X-rays in the healing arts, and Chapter 9 for particle accelerators.

AUTHORITY NOTE: Promulgated in accordance with R.S. 30:2001 et seq.

HISTORICAL NOTE: Promulgated by the Department of Environmental Quality, Nuclear Energy Division, LR 13:569 (October 1987), amended by the Office of Air Quality and Radiation Protection, Radiation Protection Division, LR 19:1421 (November 1993), amended by the Office of Environmental Assessment, Environmental Planning Division, LR 26:2576 (November 2000), amended by the Office of the Secretary, Legal Affairs Division, LR 31:2529 (October 2005).

§437. Control of Access to Very High Radiation Areas

A. In addition to the requirements in LAC 33:XV.436, the licensee or registrant shall institute measures to ensure that an individual is not able to gain unauthorized or inadvertent access to areas in which radiation levels could be encountered at 5 Gy (500 rad) or more in one hour at 1 meter from a source of radiation or any surface through which the radiation penetrates. This requirement does not apply to rooms or areas in which diagnostic X-ray systems are the only source of radiation, or to non-self-shielded irradiators.

B. The registrant is not required to control entrance or access to rooms or other areas containing sources of radiation capable of producing a very high radiation area as described in LAC 33:XV.437.A if the registrant has met all the specific requirements for access and control specified in other applicable chapters of these regulations, such as, LAC 33:XV.Chapter 5 for industrial radiography, Chapter 6 for X-rays in the healing arts, and Chapter 9 for particle accelerators.

AUTHORITY NOTE: Promulgated in accordance with R.S. 30:2001 et seq.

HISTORICAL NOTE: Promulgated by the Department of Environmental Quality, Nuclear Energy Division, LR 13:569 (October 1987), amended by the Office of Air Quality and Radiation Protection, Radiation Protection Division, LR 19:1421 (November 1993).

§438. Control of Access to Very High Radiation Areas - Irradiators

A. This Section applies to licensees or registrants with sources of radiation in non-self-shielded irradiators. This Section does not apply to sources of radiation that are used in teletherapy, in industrial radiography, or in completely self-shielded irradiators in which the source of radiation is both stored and operated within the same shielding radiation barrier and, in the designed configuration of the irradiator, is always physically inaccessible to any individual and cannot create high levels of radiation in an area that is accessible to any individual.

B. Each area in which there may exist radiation levels in excess of 5 Gy (500 rad) in one hour at 1 meter from a

source of radiation that is used to irradiate materials shall meet the following requirements:

1. each entrance or access point shall be equipped with entry control devices which:

a. function automatically to prevent any individual from inadvertently entering a very high radiation area;

b. permit deliberate entry into the area only after a control device is actuated that causes the radiation level within the area, from the source of radiation, to be reduced below that at which it would be possible for an individual to receive a deep dose equivalent in excess of 1 mSv (0.1 rem) in one hour; and

c. prevent operation of the source of radiation if it would produce radiation levels in the area that could result in a deep dose equivalent to an individual in excess of 1 mSv (0.1 rem) in one hour;

2. additional control devices shall be provided so that, upon failure of the entry control devices to function as required by LAC 33:XV.438.B.1:

a. the radiation level within the area, from the source of radiation, is reduced below that at which it would be possible for an individual to receive a deep dose equivalent in excess of 1 mSv (0.1 rem) in one hour; and

b. conspicuous visible and audible alarm signals are generated to make an individual attempting to enter the area aware of the hazard and at least one other authorized individual, who is physically present, familiar with the activity, and prepared to render or summon assistance, aware of the failure of the entry control devices;

3. the licensee or registrant shall provide control devices so that, upon failure or removal of physical radiation barriers other than the sealed source's shielded storage container:

a. the radiation level from the source of radiation is reduced below that at which it would be possible for an individual to receive a deep dose equivalent in excess of 1 mSv (0.1 rem) in one hour; and

b. conspicuous visible and audible alarm signals are generated to make potentially affected individuals aware of the hazard and the licensee or registrant or at least one other individual, who is familiar with the activity and prepared to render or summon assistance, aware of the failure or removal of the physical barrier;

4. when the shield for stored sealed sources is a liquid, the licensee or registrant shall provide means to monitor the integrity of the shield and to signal, automatically, loss of adequate shielding;

5. physical radiation barriers that comprise permanent structural components, such as walls, that have no credible probability of failure or removal in ordinary circumstances need not meet the requirements of LAC 33:XV.438.B.3 and 4;

6. each area shall be equipped with devices that will automatically generate conspicuous visible and audible alarm signals to alert personnel in the area before the source of radiation can be put into operation and in time for any individual in the area to operate a clearly identified control device, which must be installed in the area and which can prevent the source of radiation from being put into operation;

7. each area shall be controlled by use of such administrative procedures and such devices as are necessary to ensure that the area is cleared of personnel prior to each use of the source of radiation;

8. each area shall be checked by a radiation measurement to ensure that, prior to the first individual's entry into the area after any use of the source of radiation, the radiation level from the source of radiation in the area is below that at which it would be possible for an individual to receive a deep dose equivalent in excess of 1 mSv (0.1 rem) in one hour;

9. the entry control devices required in LAC 33:XV.438.B.1 shall be tested for proper functioning (see LAC 33:XV.479 for recordkeeping requirements):

a. testing shall be conducted prior to initial operation with the source of radiation on any day, unless operations were continued uninterrupted from the previous day;

b. testing shall be conducted prior to resumption of operation of the source of radiation after any unintentional interruption; and

c. the licensee or registrant shall submit to the Office of Environmental Compliance, Emergency and Radiological Services Division, and adhere to a schedule for periodic tests of the entry control and warning systems;

10. the licensee or registrant shall not conduct operations, other than those necessary to place the source of radiation in safe condition or to effect repairs on controls, unless control devices are functioning properly; and

11. entry and exit portals that are used in transporting materials to and from the irradiation area, and that are not intended for use by individuals, shall be controlled by such devices and administrative procedures as are necessary to physically protect and warn against inadvertent entry by any individual through these portals. Exit portals for irradiated materials shall be equipped to detect and signal the presence of any loose radioactive material that is carried toward such an exit and to prevent loose radioactive material from being carried out of the area.

C. Licensees, registrants, or applicants for licenses or registrations for sources of radiation within the purview of Subsection B of this Section that will be used in a variety of positions or in locations, such as open fields or forests, that make it impracticable to comply with certain requirements of Subsection B of this Section, such as those for the automatic control of radiation levels, may apply to the Office of Environmental Compliance, Emergency and Radiological

Services Division, for approval of alternative safety measures. Alternative safety measures shall provide personnel protection at least equivalent to those specified in Subsection B of this Section. At least one of the alternative measures shall include an entry-preventing interlock control based on a measurement of the radiation that ensures the absence of high radiation levels before an individual can gain access to the area where such sources of radiation are used.

D. The entry control devices required in LAC 33:XV.438.B and C shall be established in such a way that no individual will be prevented from leaving the area.

AUTHORITY NOTE: Promulgated in accordance with R.S. 30:2001 et seq.

HISTORICAL NOTE: Promulgated by the Department of Environmental Quality, Nuclear Energy Division, LR 13:569 (October 1987), amended by the Office of Air Quality and Radiation Protection, Radiation Protection Division, LR 19:1421 (November 1993), amended by the Office of Environmental Assessment, Environmental Planning Division, LR 26:2576 (November 2000), amended by the Office of the Secretary, Legal Affairs Division, LR 31:2529 (October 2005).

Subchapter E. Respiratory Protection and Controls to Restrict Internal Exposure in Restricted Areas

§440. Use of Process or Other Engineering Controls

A. The licensee or registrant shall use, to the extent practicable, process or other engineering controls, such as containment, decontamination, or ventilation, to control the concentrations of radioactive material in air.

AUTHORITY NOTE: Promulgated in accordance with R.S. 30:2001 et seq.

HISTORICAL NOTE: Promulgated by the Department of Environmental Quality, Nuclear Energy Division, LR 13:569 (October 1987), amended by the Office of Air Quality and Radiation Protection, Radiation Protection Division, LR 19:1421 (November 1993), amended by the Office of Environmental Assessment, Environmental Planning Division, LR 29:1468 (August 2003).

§441. Use of Other Controls

A. When it is not practicable to apply process or other engineering controls to control the concentrations of radioactive material in air to values below those that define an airborne radioactivity area, the licensee or registrant shall, consistent with maintaining the total effective dose equivalent ALARA, increase monitoring and limit intakes by one or more of the following means:

1. control of access;
2. limitation of exposure times;
3. use of respiratory protection equipment; or
4. other controls.

B. If the licensee or registrant performs an ALARA analysis to determine whether or not respirators should be used, the licensee or registrant may consider safety factors other than radiological factors. The licensee or registrant should also consider the impact of respirator use on workers' industrial health and safety.

AUTHORITY NOTE: Promulgated in accordance with R.S. 30:2001 et seq.

HISTORICAL NOTE: Promulgated by the Department of Environmental Quality, Office of Air Quality and Radiation Protection, Radiation Protection Division, LR 19:1421 (November 1993), amended by the Office of Environmental Assessment, Environmental Planning Division, LR 29:1468 (August 2003).

§442. Use of Individual Respiratory Protection Equipment

A. If the licensee or registrant assigns or permits the use of respiratory protection equipment to limit intakes in accordance with LAC 33:XV.441:

1. except as provided in Paragraph A.2 of this Section, the licensee or registrant shall use only respiratory protection equipment that is tested and certified or has had certification extended by the National Institute for Occupational Safety and Health/Mine Safety and Health Administration (NIOSH/MSHA);

2. the licensee or registrant may use equipment that has not been tested or certified by NIOSH/MSHA, has not had certification extended by NIOSH/MSHA, or for which there is no schedule for testing or certification, provided the licensee or registrant has submitted to the Office of Environmental Compliance, Emergency and Radiological Services Division, and the Office of Environmental Compliance, Emergency and Radiological Services Division, has approved an application for authorized use of that equipment, including a demonstration by testing, or a demonstration on the basis of test information, that the material and performance characteristics of the equipment are capable of providing the proposed degree of protection under anticipated conditions of use;

3. the licensee or registrant shall implement and maintain a respiratory protection program that includes:

a. air sampling sufficient to identify the potential hazard, permit proper equipment selection, and estimate doses;

b. surveys and bioassays, as appropriate, to evaluate actual intakes;

c. tests of respirators for operability (user seal check for face sealing devices and functional check for others) immediately prior to each use;

d. providing atmosphere-supplying respirators with respirable air of grade D quality or better as defined by the Compressed Gas Association in publication G-7.1, "Commodity Specification for Air," 1997, and included in the regulations of the Occupational Safety and Health Administration (29 CFR 1910.134(i)(1)(ii)(A) through (E)). Grade D quality air criteria include:

i. oxygen content (v/v) of 19.5-23.5 percent;

ii. hydrocarbon (condensed) content of 5 milligrams per cubic meter of air or less;

iii. carbon monoxide (CO) content of 10 ppm or less;

iv. carbon dioxide content of 1,000 ppm or less; and

v. lack of noticeable odor;

e. fit testing, with fit factor ≥ 10 times the APF for negative pressure devices, and a fit factor ≥ 500 for any positive pressure, continuous flow, and pressure-demand devices, before the first field use of tight fitting, face-sealing respirators and periodically thereafter at a frequency not to exceed one year. Fit testing must be performed with the facepiece operating in the negative pressure mode;

f. written procedures regarding:

i. monitoring, including air sampling and bioassays;

ii. supervision and training of respirator users;

iii. fit testing;

iv. respirator selection;

v. breathing air quality;

vi. inventory and control;

vii. storage, issuance, maintenance, repair, testing, and quality assurance of respiratory protection equipment;

viii. recordkeeping; and

ix. limitations on periods of respirator use and relief from respirator use;

g. determination by a physician prior to the initial fitting of a respirator, prior to the first field use of a non-face sealing respirator, and at least every 12 months thereafter, or periodically at a frequency determined by a physician, that the individual user is medically fit to use the respiratory protection equipment;

4. the licensee or registrant shall issue and comply with a written policy statement on respirator usage covering:

a. the use of process or other engineering controls, instead of respirators;

b. the routine, nonroutine, and emergency use of respirators; and

c. the length of periods of respirator use and relief from respirator use;

5. the licensee or registrant shall make available sufficient standby rescue persons to assist all respirator users and to provide effective emergency rescue if needed, and shall provide for the availability of standby rescue persons who:

a. are required to be present in situations whenever one-piece atmosphere-supplying suits, or any combination of supplied air respiratory protection device and personnel protective equipment are used from which an unaided individual would have difficulty extricating himself or herself;

b. must be equipped with respiratory protection devices or other apparatus appropriate for the potential hazards; and

c. shall observe or otherwise maintain continuous communication with the workers (by visual, voice, signal line, telephone, radio, or other suitable means) and be immediately available to assist them in case of a failure of the air supply or for any other reason that requires relief from distress;

6. the licensee or registrant shall advise each respirator user that the user may leave the area at any time for relief from respirator use in the event of equipment malfunction, physical or psychological distress, procedural or communication failure, significant deterioration of operating conditions, or any other conditions that might require such relief; and

7. the licensee or registrant shall use respiratory protection equipment within the equipment manufacturer's expressed limitations for type and mode of use and shall provide proper visual, communication, and other special capabilities, such as adequate skin protection, when needed.

B. When estimating exposure of individuals to airborne radioactive materials, the licensee or registrant may make allowance for respiratory protection equipment used to limit intakes pursuant to LAC 33:XV.441, provided that the following conditions, in addition to those in LAC 33:XV.442.A, are satisfied:

1. the licensee or registrant selects respiratory protection equipment that provides a protection factor, specified in LAC 33:XV.499.Appendix A, greater than the multiple by which peak concentrations of airborne radioactive materials in the working area are expected to exceed the values specified in LAC 33:XV.499.Appendix B, Table I, Column 3. However, if the selection of respiratory protection equipment with a protection factor greater than the peak concentration is inconsistent with the goal specified in LAC 33:XV.441 of keeping the total effective dose equivalent ALARA, the licensee or registrant may select respiratory protection equipment with a lower protection factor provided that such a selection would result in a total effective dose equivalent that is ALARA. The concentration of radioactive material in the air that is inhaled when respirators are worn may be initially estimated by dividing the average concentration in air, during each period of uninterrupted use, by the protection factor. If the exposure is later found to be greater than initially estimated, the corrected value shall be used; if the exposure is later found to be less than initially estimated, the corrected value may be used; and

2. the licensee or registrant shall obtain authorization from the Office of Environmental Compliance, Emergency and Radiological Services Division, before assigning respiratory protection factors in excess of those specified in LAC 33:XV.499.Appendix A. The department may authorize

a licensee or registrant to use higher protection factors on receipt of an application that:

a. describes the situation for which a need exists for higher protection factors; and

b. demonstrates that the respiratory protection equipment provides these higher protection factors under the proposed conditions of use.

C. In an emergency, the licensee or registrant shall use as emergency equipment only respiratory protection equipment that has been specifically certified or had certification extended for emergency use by NIOSH/MSHA.

D. The licensee or registrant shall notify the Office of Environmental Compliance, Emergency and Radiological Services Division, in writing at least 30 days before the date that respiratory protection equipment is first used pursuant to either Subsection A or B of this Section.

AUTHORITY NOTE: Promulgated in accordance with R.S. 30:2001 et seq.

HISTORICAL NOTE: Promulgated by the Department of Environmental Quality, Nuclear Energy Division, LR 13:569 (October 1987), amended by the Office of Air Quality and Radiation Protection, Radiation Protection Division, LR 19:1421 (November 1993), LR 22:972 (October 1996), amended by the Office of Environmental Assessment, Environmental Planning Division, LR 26:2577 (November 2000), LR 29:1469 (August 2003), LR 30:1666 (August 2004), amended by the Office of the Secretary, Legal Affairs Division, LR 31:2529 (October 2005), LR 32:812 (May 2006).

§443. Application for Use of Higher Assigned Protection Factors

A. The licensee shall obtain authorization from the department before using assigned protection factors in excess of those specified in LAC 33:XV.499.Appendix A. The department may authorize a licensee to use higher assigned protection factors upon receipt of an application that:

1. describes the situation for which a need exists for higher protection factors; and

2. demonstrates that the respiratory protection equipment provides these higher protection factors under the proposed conditions of use.

AUTHORITY NOTE: Promulgated in accordance with R.S. 30:2001 et seq., and in particular 2104.

HISTORICAL NOTE: Promulgated by the Department of Environmental Quality, Office of Environmental Assessment, Environmental Planning Division, LR 28:1011 (May 2002).

Subchapter F. Storage and Control of Licensed or Registered Sources of Radiation

§445. Security of Stored Sources of Radiation

A. The licensee or registrant shall secure licensed or registered radioactive material from unauthorized removal or access.

B. The licensee or registrant shall maintain constant surveillance or use devices or administrative procedures to prevent unauthorized use of licensed or registered radioactive material that is in a controlled or unrestricted area and that is not in storage.

C. The registrant shall secure registered radiation machines from unauthorized removal.

D. The registrant shall use devices or administrative procedures to prevent unauthorized use of registered radiation machines.

AUTHORITY NOTE: Promulgated in accordance with R.S. 30:2001 et seq.

HISTORICAL NOTE: Promulgated by the Department of Environmental Quality, Office of Air Quality and Radiation Protection, Radiation Protection Division, LR 19:1421 (November 1993), amended LR 22:972 (October 1996), LR 24:2095 (November 1998).

Subchapter G. Precautionary Procedures

§450. Caution Signs

A. Standard Radiation Symbol. Unless otherwise authorized by the department, the symbol prescribed by this Section shall use the colors magenta or purple or black on yellow background. The symbol prescribed is the three-bladed design as follows:

1. cross-hatched area is to be magenta or purple or black; and

2. the background is to be yellow.

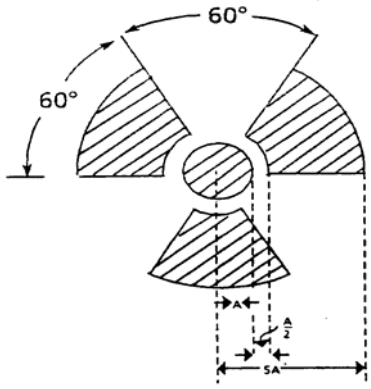

Radiation Symbol

B. Exception to Color Requirements for Standard Radiation Symbol. Notwithstanding the requirements of LAC 33:XV.450.A, licensees or registrants are authorized to label sources, source holders, or device components containing sources of radiation that are subjected to high temperatures, with conspicuously etched or stamped radiation caution symbols and without a color requirement.

C. Additional Information on Signs and Labels. In addition to the contents of signs and labels prescribed in this Subchapter, the licensee or registrant shall provide, on or near the required signs and labels, additional information, as appropriate, to make individuals aware of potential radiation exposures and to minimize the exposures.

AUTHORITY NOTE: Promulgated in accordance with R.S. 30:2001 et seq.

HISTORICAL NOTE: Promulgated by the Department of Environmental Quality, Office of Air Quality and Radiation Protection, Radiation Protection Division, LR 19:1421 (November 1993), amended by the Office of Environmental Assessment, Environmental Planning Division, LR 26:2577 (November 2000).

§451. Posting Requirements

A. Posting of Radiation Areas. The licensee or registrant shall post each radiation area with a conspicuous sign or signs bearing the radiation symbol and the words "CAUTION, RADIATION AREA."

B. Posting of High Radiation Areas. The licensee or registrant shall post each high radiation area with a conspicuous sign or signs bearing the radiation symbol and the words "CAUTION, HIGH RADIATION AREA" or "DANGER, HIGH RADIATION AREA."

C. Posting of Very High Radiation Areas. The licensee or registrant shall post each very high radiation area with a conspicuous sign or signs bearing the radiation symbol and words "GRAVE DANGER, VERY HIGH RADIATION AREA."

D. Posting of Airborne Radioactivity Areas. The licensee or registrant shall post each airborne radioactivity area with a conspicuous sign or signs bearing the radiation symbol and the words "CAUTION, AIRBORNE RADIOACTIVITY AREA" or "DANGER, AIRBORNE RADIOACTIVITY AREA."

E. Posting of Areas or Rooms in which Licensed or Registered Sources of Radiation are Used or Stored. The licensee or registrant shall post each area or room in which there is used or stored an amount of licensed or registered source of radiation exceeding 10 times the quantity of such source of radiation specified in LAC 33:XV.499.Appendix C with a conspicuous sign or signs bearing the radiation symbol and the words "CAUTION, RADIOACTIVE MATERIAL(S)" or "DANGER, RADIOACTIVE MATERIAL(S)."

AUTHORITY NOTE: Promulgated in accordance with R.S. 30:2001 et seq.

HISTORICAL NOTE: Promulgated by the Department of Environmental Quality, Nuclear Energy Division, LR 13:569 (October 1987), amended by the Office of Air Quality and Radiation Protection, Radiation Protection Division, LR 19:1421 (November 1993).

§452. Exceptions to Posting Requirements

A. A licensee or registrant is not required to post caution signs in areas or rooms containing sources of radiation for periods of less than eight hours, if each of the following conditions is met:

1. the sources of radiation are constantly attended during these periods by an individual who takes the precautions necessary to prevent the exposure of individuals to sources of radiation in excess of the limits established in this Chapter; and

2. the area or room is subject to the licensee's or registrant's control.

B. Rooms or other areas in hospitals that are occupied by patients are not required to be posted with caution signs in accordance with LAC 33:XV.451, provided that the patient could be released from licensee control in accordance with LAC 33:XV.725 and 745.

C. Rooms or other areas in hospitals that are occupied by patients are not required to be posted with caution signs, provided that:

1. a patient being treated with a permanent implant could be released from confinement in accordance with LAC 33:XV.725; or

2. a patient being treated with a therapeutic radiopharmaceutical could be released from confinement in accordance with LAC 33:XV.725.

D. A room or area is not required to be posted with a caution sign because of the presence of a sealed source, provided that the radiation level at 30 centimeters from the surface of the sealed source container or housing does not exceed 0.05 mSv (0.005 rem) per hour.

E. A room or area is not required to be posted with a caution sign because of the presence of radiation machines used solely for diagnosis in the healing arts.

AUTHORITY NOTE: Promulgated in accordance with R.S. 30:2001 et seq.

HISTORICAL NOTE: Promulgated by the Department of Environmental Quality, Nuclear Energy Division, LR 13:569 (October 1987), amended by the Office of Air Quality and Radiation Protection, Radiation Protection Division, LR 19:1421 (November 1993), LR 22:972 (October 1996), LR 24:2096 (November 1998).

§453. Labeling Containers and Radiation Machines

A. The licensee or registrant shall ensure that each container of licensed or registered source of radiation bears a durable, clearly visible label bearing the radiation symbol and the words "CAUTION, RADIOACTIVE MATERIAL, NOTIFY CIVIL AUTHORITIES [or 'NAME OF COMPANY']" or "DANGER, RADIOACTIVE MATERIAL, NOTIFY CIVIL AUTHORITIES [or 'NAME OF COMPANY']." The label shall also provide information such as the radionuclides present, an estimate of the quantity of radioactivity, the date for which the activity is estimated, radiation levels, kinds of materials, and mass enrichment, to permit individuals handling or using the containers, or working in the vicinity of the containers, to take precautions to avoid or minimize exposures.

B. Each licensee or registrant shall, prior to removal or disposal of empty uncontaminated containers to unrestricted areas, remove or deface the radioactive material label or otherwise clearly indicate that the container no longer contains radioactive materials.

C. Each registrant shall ensure that each radiation machine is labeled in a conspicuous manner which cautions individuals that radiation is produced when it is energized.

AUTHORITY NOTE: Promulgated in accordance with R.S. 30:2001 et seq.

HISTORICAL NOTE: Promulgated by the Department of Environmental Quality, Nuclear Energy Division, LR 13:569 (October 1987), amended by the Office of Air Quality and Radiation Protection, Radiation Protection Division, LR 19:1421 (November 1993), amended by the Office of Environmental Assessment, Environmental Planning Division, LR 27:1231 (August 2001).

§454. Exemptions to Labeling Requirements

A. A licensee or registrant is not required to label:

1. containers holding licensed or registered sources of radiation in quantities less than the quantities listed in LAC 33:XV.499.Appendix C;

2. containers holding licensed or registered sources of radiation in concentrations less than those specified in LAC 33:XV.499.Appendix B, Table III;

3. containers attended by an individual who takes the precautions necessary to prevent the exposure of individuals in excess of the limits established by this Chapter;

4. containers when they are in transport and packaged and labeled in accordance with the regulations of the U.S. Department of Transportation; [4]

5. containers that are accessible only to individuals authorized to handle or use them, or to work in the vicinity of the containers, if the contents are identified to these individuals by a readily available written record. Examples of containers of this type are containers in locations such as water-filled canals, storage vaults, or hot cells. The record shall be retained as long as the containers are in use for the purpose indicated on the record; or

6. installed manufacturing or process equipment, such as piping and tanks.

[4]Labeling of packages containing radioactive materials is required by the U.S. Department of Transportation if the amount and type of radioactive material exceeds the limits for an excepted quantity or article as defined and limited by U.S. Department of Transportation regulations 49 CFR 173.403(m) and (w) and 173.421-424.

AUTHORITY NOTE: Promulgated in accordance with R.S. 30:2001 et seq.

HISTORICAL NOTE: Promulgated by the Department of Environmental Quality, Office of Air Quality and Radiation Protection, Radiation Protection Division, LR 19:1421 (November 1993).

§455. Procedures for Receiving and Opening Packages

A. Each licensee or registrant who expects to receive a package containing quantities of radioactive material in excess of a *Type A quantity*, as defined in LAC 33:XV.1503 and LAC 33:XV.1599.Appendix A, shall make arrangements to receive:

1. the package when the carrier offers it for delivery; or

2. the notification of the arrival of the package at the carrier's terminal and to take possession of the package expeditiously.

B. Each licensee or registrant shall:

1. monitor the external surfaces of a labeled[5] package for radioactive contamination unless the *package* contains only *radioactive material* in the form of gas or in *special form*, as defined in LAC 33:XV.102;

2. monitor the external surfaces of a labeled[5] package for radiation levels unless the *package* contains quantities of *radioactive material* that are less than or equal to the *Type A quantity*, as defined in LAC 33:XV.1503 and LAC 33:XV.1599.Appendix A; and

3. monitor all packages known to contain radioactive material for radioactive contamination and radiation levels if there is evidence of degradation of package integrity, such as packages that are crushed, wet, or damaged.

C. The licensee or registrant shall perform the monitoring required by Subsection B of this Section as soon as practical after receipt of the package, but not later than three hours after the package is received at the licensee's or registrant's facility, if it is received during the licensee's or registrant's normal working hours, or if there is evidence of degradation of package integrity, such as a package that is crushed, wet, or damaged. If a package is received after working hours and has no evidence of degradation of package integrity, the package shall be monitored no later than three hours from the beginning of the next working day.

D. The licensee or registrant shall immediately notify the final delivery carrier and, by telephone and telegram, mailgram, or facsimile, the Office of Environmental Compliance at (225) 765-0160 when:

1. removable radioactive surface contamination exceeds the limits of LAC 33:XV.1512.B.9; or

2. external radiation levels exceed the limits of LAC 33:XV.1512.B.10.

E. Each licensee or registrant shall:

1. establish, maintain, and retain written procedures for safely opening packages in which radioactive material is received; and

2. ensure that the procedures are followed and that due consideration is given to special instructions for the type of package being opened.

F. Licensees or registrants transferring special form sources in vehicles owned or operated by the licensee or registrant to and from a work site are exempt from the contamination monitoring requirements of LAC 33:XV.455.B, but are not exempt from the monitoring requirement in LAC 33:XV.455.B for measuring radiation levels that ensures that the source is still properly lodged in its shield.

[5]Labeled with a Radioactive White I, Yellow II or Yellow III label as specified in U.S. Department of Transportation regulations 49 CFR 172.403 and 172.436-440.

AUTHORITY NOTE: Promulgated in accordance with R.S. 30:2001 et seq.

HISTORICAL NOTE: Promulgated by the Department of Environmental Quality, Nuclear Energy Division, LR 13:569 (October 1987), amended by the Office of Air Quality and Radiation Protection, Radiation Protection Division, LR 19:1421 (November 1993), LR 22:973 (October 1996), amended by the Office of Environmental Assessment, Environmental Planning Division, LR 26:2577 (November 2000), LR 28:1951 (September 2002).

Subchapter H. Waste Disposal

§460. General Requirements

A. A licensee or registrant shall dispose of licensed or registered sources of radiation only:

1. by transfer to an authorized recipient as provided in LAC 33:XV.465 or in LAC 33:XV.Chapters 3, 13, or 14, or to the U.S. Department of Energy;

2. by decay in storage;

3. by release in effluents within the limits in LAC 33:XV.421; or

4. as authorized pursuant to LAC 33:XV.461, 462, 463, or 464.

B. A person shall be specifically licensed or registered to receive waste containing licensed or registered sources of radiation from other persons for:

1. treatment prior to disposal;

2. treatment or disposal by incineration;

3. decay in storage;

4. disposal at a land disposal facility licensed pursuant to LAC 33:XV.Chapter 13; or

5. storage until transferred to a storage or disposal facility authorized to receive the waste.

AUTHORITY NOTE: Promulgated in accordance with R.S. 30:2001 et seq.

HISTORICAL NOTE: Promulgated by the Department of Environmental Quality, Office of Air Quality and Radiation Protection, Radiation Protection Division, LR 19:1421 (November 1993).

§461. Method for Obtaining Approval of Proposed Disposal Procedures

A. A licensee or registrant or applicant for a license or registration may apply to the Office of Environmental Compliance, Emergency and Radiological Services Division, for approval of proposed procedures, not otherwise authorized in these regulations, to dispose of licensed or registered sources of radiation generated in the licensee's or registrant's operations. Each application shall include:

1. a description of the waste containing licensed or registered material to be disposed of, including the physical and chemical properties that have an impact on risk evaluation, and the proposed manner and conditions of waste disposal;

2. an analysis and evaluation of pertinent information on the nature of the environment;

3. the nature and location of other potentially affected properties; and

4. analyses and procedures to ensure that doses are maintained ALARA and within the dose limits in this Chapter.

AUTHORITY NOTE: Promulgated in accordance with R.S. 30:2001 et seq.

HISTORICAL NOTE: Promulgated by the Department of Environmental Quality, Office of Air Quality and Radiation Protection, Radiation Protection Division, LR 19:1421 (November 1993), amended by the Office of Environmental Assessment, Environmental Planning Division, LR 26:2577 (November 2000), amended by the Office of the Secretary, Legal Affairs Division, LR 31:2529 (October 2005).

§462. Disposal by Release into Sanitary Sewerage

A. A licensee or registrant may discharge licensed or registered sources of radiation into sanitary sewerage if each of the following conditions is satisfied:

1. the material is readily water soluble, or is readily dispersible biological material in water;

2. the quantity of licensed or registered radioactive material that the licensee or registrant releases into the sewer in one month divided by the average monthly volume of water released into the sewer by the licensee or registrant does not exceed the concentration listed in LAC 33:XV.499.Appendix B, Table III;

3. if more than one radionuclide is released, the following conditions must also be satisfied:

a. the licensee or registrant shall determine the fraction of the limit in LAC 33:XV.499.Appendix B, Table III represented by discharges into sanitary sewerage by dividing the actual monthly average concentration of each radionuclide released by the licensee or registrant into the sewer by the concentration of that radionuclide listed in LAC 33:XV.499.Appendix B, Table III; and

b. the sum of the fractions for each radionuclide required by LAC 33:XV.462.A.3.a does not exceed unity; and

4. the total quantity of licensed or registered radioactive material that the licensee or registrant releases into the sanitary sewerage in a year does not exceed 185 GBq (5 Ci) of hydrogen-3, 37 GBq (1 Ci) of carbon-14, and 37 GBq (1 Ci) of all other radioactive materials combined.

B. Excreta from individuals undergoing medical diagnosis or therapy with radioactive material are not subject to the limitations contained in LAC 33:XV.462.A.

AUTHORITY NOTE: Promulgated in accordance with R.S. 30:2001 et seq.

HISTORICAL NOTE: Promulgated by the Department of Environmental Quality, Office of Air Quality and Radiation Protection, Radiation Protection Division, LR 19:1421 (November 1993).

§463. Treatment or Disposal by Incineration

A. A licensee or registrant may treat or dispose of licensed or registered sources of radiation by incineration only in the form and concentration specified in LAC 33:XV.464 or as specifically approved by the department in accordance with LAC 33:XV.461.

AUTHORITY NOTE: Promulgated in accordance with R.S. 30:2001 et seq.
HISTORICAL NOTE: Promulgated by the Department of Environmental Quality, Office of Air Quality and Radiation Protection, Radiation Protection Division, LR 19:1421 (November 1993), amended LR 22:973 (October 1996), amended by the Office of Environmental Assessment, Environmental Planning Division, LR 26:2577 (November 2000).

§464. Disposal of Specific Wastes

A. A licensee or registrant may dispose of the following licensed or registered sources of radiation as if it were not radioactive:

1. 1.85 kBq (0.05 μCi), or less, of hydrogen-3 or carbon-14 per gram of medium used for liquid scintillation counting; and

2. 1.85 kBq (0.05 μCi), or less, of hydrogen-3 or carbon-14 per gram of animal tissue, averaged over the weight of the entire animal.

B. A licensee or registrant shall not dispose of tissue pursuant to LAC 33:XV.464.A.2 in a manner that would permit its use either as food for humans or as animal feed.

C. The licensee or registrant shall maintain records in accordance with LAC 33:XV.478.

AUTHORITY NOTE: Promulgated in accordance with R.S. 30:2001 et seq.
HISTORICAL NOTE: Promulgated by the Department of Environmental Quality, Office of Air Quality and Radiation Protection, Radiation Protection Division, LR 19:1421 (November 1993).

§465. Transfer for Disposal and Manifests

A. The requirements of this Section and Appendices D and E of this Chapter are designed to: control transfers of low-level radioactive waste by any *waste generator*, *waste collector*, or *waste processor* licensee, as defined in LAC 33:XV.499.Appendix D, who ships low-level waste either directly or indirectly through a waste collector or waste processor to a licensed low-level radioactive waste disposal facility; establish a manifest tracking system; and supplement existing requirements concerning transfers and recordkeeping for those wastes.

B. Each shipment of radioactive waste designated for disposal at a licensed low-level radioactive waste disposal facility shall be accompanied by a shipment manifest in accordance with LAC 33:XV.499.Appendix D.

C. Each shipment manifest shall include a certification by the waste generator in accordance with LAC 33:XV.499.Appendix D.

D. Each person involved in the transfer of waste for disposal or in the disposal of waste, including the waste generator, waste collector, waste processor, and disposal facility operator, shall comply with the requirements specified in LAC 33:XV.499.Appendix D.

AUTHORITY NOTE: Promulgated in accordance with R.S. 30:2001 et seq.
HISTORICAL NOTE: Promulgated by the Department of Environmental Quality, Office of Air Quality and Radiation Protection, Radiation Protection Division, LR 19:1421 (November 1993), amended LR 24:2096 (November 1998).

§466. Compliance with Environmental and Health Protection Regulations

A. Nothing in LAC 33:XV.460-465 relieves the licensee or registrant from complying with other applicable federal, state and local regulations governing any other toxic or hazardous properties of materials that may be disposed of pursuant to LAC 33:XV.460-465.

AUTHORITY NOTE: Promulgated in accordance with R.S. 30:2001 et seq.
HISTORICAL NOTE: Promulgated by the Department of Environmental Quality, Office of Air Quality and Radiation Protection, Radiation Protection Division, LR 19:1421 (November 1993).

Subchapter I. Records

§470. General Provisions

A. Each licensee or registrant shall use the special units curie, rad, and rem, including multiples and subdivisions, and shall clearly indicate the units of all quantities on records required by this Chapter. In the records required by this Chapter, the licensee may record quantities in the International System of Units (SI) in parentheses following each of the special units specified above. However, all quantities must be recorded as stated in this Subsection. Notwithstanding these allowances, when recording information on shipment manifests, as required in LAC 33:XV.465, information shall be recorded in SI or in both SI and special units.

B. The licensee or registrant shall make a clear distinction among the quantities entered on the records required by this Chapter, such as total effective dose equivalent, total organ dose equivalent, shallow dose equivalent, lens dose equivalent, deep dose equivalent, or committed effective dose equivalent.

AUTHORITY NOTE: Promulgated in accordance with R.S. 30:2001 et seq.
HISTORICAL NOTE: Promulgated by the Department of Environmental Quality, Office of Air Quality and Radiation Protection, Radiation Protection Division, LR 19:1421 (November 1993), amended LR 24:2096 (November 1998), amended by the Office of Environmental Assessment, Environmental Planning Division, LR 26:2770 (December 2000).

§471. Records of Radiation Protection Programs

A. Each licensee or registrant shall maintain records of the radiation protection program, including:

1. the provisions of the program; and

2. audits and other reviews of program content and implementation.

B. The licensee or registrant shall retain the records required by LAC 33:XV.471.A.1 until the department terminates each pertinent license or registration requiring the record. The licensee or registrant shall retain the records required by LAC 33:XV.471.A.2 for three years after the record is made.

AUTHORITY NOTE: Promulgated in accordance with R.S. 30:2001 et seq.
HISTORICAL NOTE: Promulgated by the Department of Environmental Quality, Office of Air Quality and Radiation Protection, Radiation Protection Division, LR 19:1421 (November 1993), amended by the Office of Environmental Assessment, Environmental Planning Division, LR 26:2578 (November 2000).

§472. Records of Surveys

A. Each licensee or registrant shall maintain records showing the results of surveys and calibrations required by LAC 33:XV.430 and 455.B. The licensee or registrant shall retain these records for three years after the record is made.

B. The licensee or registrant shall retain each of the following records until the department terminates each pertinent license or registration requiring the record:

1. records of the results of surveys to determine the dose from external sources of radiation used, in the absence of or in combination with individual monitoring data, in the assessment of individual dose equivalents;

2. records of the results of measurements and calculations used to determine individual intakes of radioactive material and used in the assessment of internal dose;

3. records showing the results of air sampling, surveys, and bioassays required pursuant to LAC 33:XV.442.A.3.a and b; and

4. records of the results of measurements and calculations used to evaluate the release of radioactive effluents to the environment.

C. Upon termination of the license or registration, the licensee or registrant shall permanently store records or shall make provision with the department for transfer to the department.

AUTHORITY NOTE: Promulgated in accordance with R.S. 30:2001 et seq.
HISTORICAL NOTE: Promulgated by the Department of Environmental Quality, Office of Air Quality and Radiation Protection, Radiation Protection Division, LR 19:1421 (November 1993), amended by the Office of Environmental Assessment, Environmental Planning Division, LR 26:2578 (November 2000).

§473. Records of Tests for Leakage or Contamination from Sealed Sources

A. Records of tests for leakage or contamination from sealed sources required by LAC 33:XV.426 shall be kept in units of becquerel or microcurie and maintained for inspection by the department for five years after the records are made.

AUTHORITY NOTE: Promulgated in accordance with R.S. 30:2001 et seq.
HISTORICAL NOTE: Promulgated by the Department of Environmental Quality, Office of Air Quality and Radiation Protection, Radiation Protection Division, LR 19:1421 (November 1993), amended by the Office of Environmental Assessment, Environmental Planning Division, LR 26:2578 (November 2000).

§474. Records of Prior Occupational Dose

A. The licensee or registrant shall retain the records of prior occupational dose and exposure history as specified in LAC 33:XV.414 on department Form DRC-4 or equivalent until the department terminates each pertinent license or registration requiring this record. The licensee or registrant shall retain records used in preparing Form DRC-4 or equivalent for three years after the record is made.

B. Upon termination of the license or registration, the licensee or registrant shall permanently store records on department Form DRC-4 or equivalent or shall make provision with the department for transfer to the department.

AUTHORITY NOTE: Promulgated in accordance with R.S. 30:2001 et seq.
HISTORICAL NOTE: Promulgated by the Department of Environmental Quality, Office of Air Quality and Radiation Protection, Radiation Protection Division, LR 19:1421 (November 1993), amended by the Office of Environmental Assessment, Environmental Planning Division, LR 26:2578 (November 2000).

§475. Records of Planned Special Exposures

A. For each use of the provisions of LAC 33:XV.415 for planned special exposures, the licensee or registrant shall maintain records that describe:

1. the exceptional circumstances requiring the use of a planned special exposure;

2. the name of the management official who authorized the planned special exposure and a copy of the signed authorization;

3. what actions were necessary;

4. why the actions were necessary;

5. what precautions were taken to assure that doses were maintained ALARA;

6. what individual and collective doses were expected to result; and

7. the doses actually received in the planned special exposure.

B. The licensee or registrant shall retain the records until the department terminates each pertinent license or registration requiring these records.

C. Upon termination of the license or registration, the licensee or registrant shall permanently store records or shall make provision with the department for transfer to the department.

AUTHORITY NOTE: Promulgated in accordance with R.S. 30:2001 et seq.
HISTORICAL NOTE: Promulgated by the Department of Environmental Quality, Office of Air Quality and Radiation

Protection, Radiation Protection Division, LR 19:1421 (November 1993), amended by the Office of Environmental Assessment, Environmental Planning Division, LR 26:2578 (November 2000).

§476. Records of Individual Monitoring Results

A. Recordkeeping Requirement. Each licensee or registrant shall maintain records of doses received by all individuals for whom monitoring was required pursuant to LAC 33:XV.431, and records of doses received during planned special exposures, accidents, and emergency conditions. Assessments of dose equivalent and records made using units in effect before January 1, 1994, need not be changed. These records shall include, when applicable:

1. the deep dose equivalent to the whole body, lens dose equivalent, shallow dose equivalent to the skin, and shallow dose equivalent to the extremities;

2. the estimated intake of radionuclides (see LAC 33:XV.411);

3. the committed effective dose equivalent assigned to the intake of radionuclides;

4. the specific information used to calculate the committed effective dose equivalent in accordance with LAC 33:XV.413.C;

5. the total effective dose equivalent when required by LAC 33:XV.411; and

6. the total of the deep dose equivalent and the committed dose to the organ receiving the highest total dose.

B. Recordkeeping Frequency. The licensee or registrant shall make entries of the records specified in LAC 33:XV.476.A at intervals not to exceed one year.

C. Recordkeeping Format. The licensee or registrant shall maintain the records specified in LAC 33:XV.476.A on department Form DRC-5, in accordance with the instructions for department Form DRC-5, or in clear and legible records containing all the information required by department Form DRC-5.

D. The licensee or registrant shall maintain the records of dose equivalent to an embryo/fetus with the records of dose to the declared pregnant woman. The declaration of pregnancy, including the estimated date of conception, shall also be kept on file, but may be maintained separately from the dose records.

E. The licensee or registrant shall retain each required form or record until the department terminates each pertinent license or registration requiring the record.

F. Upon termination of the license or registration, the licensee or registrant shall permanently store records on department Form DRC-4 or equivalent, or shall make provision with the department for transfer to the department.

AUTHORITY NOTE: Promulgated in accordance with R.S. 30:2001 et seq.

HISTORICAL NOTE: Promulgated by the Department of Environmental Quality, Office of Air Quality and Radiation Protection, Radiation Protection Division, LR 19:1421 (November 1993), amended by the Office of Environmental Assessment, Environmental Planning Division, LR 26:2578 (November 2000), LR 26:2770 (December 2000).

§477. Records of Dose to Individual Members of the Public

A. Each licensee or registrant shall maintain records sufficient to demonstrate compliance with the dose limit for individual members of the public. (See LAC 33:XV.421.)

B. The licensee or registrant shall retain the records required by LAC 33:XV.477.A until the department terminates each pertinent license or registration requiring the record.

AUTHORITY NOTE: Promulgated in accordance with R.S. 30:2001 et seq.

HISTORICAL NOTE: Promulgated by the Department of Environmental Quality, Office of Air Quality and Radiation Protection, Radiation Protection Division, LR 19:1421 (November 1993), amended by the Office of Environmental Assessment, Environmental Planning Division, LR 26:2578 (November 2000).

§478. Records of Waste Disposal

A. Each licensee or registrant shall maintain records of the disposal of licensed or registered materials made pursuant to LAC 33:XV.461-464 and LAC 33:XV.Chapter 13, and disposal by burial in soil, including burials authorized before January 28, 1981, when regulations removed the authorization.[6]

B. The licensee or registrant shall retain the records required by LAC 33:XV.478.A until the department terminates each pertinent license or registration requiring the record. Requirements for disposition of these records, prior to license termination, are located in LAC 33:XV.342.

[6]A previous Section, D.304, of the Louisiana Radiation Regulations permitted burial of small quantities of licensed materials in soil before January 28, 1981, without specific agency authorization.

AUTHORITY NOTE: Promulgated in accordance with R.S. 30:2001 et seq.

HISTORICAL NOTE: Promulgated by the Department of Environmental Quality, Office of Air Quality and Radiation Protection, Radiation Protection Division, LR 19:1421 (November 1993), amended by the Office of Environmental Assessment, Environmental Planning Division, LR 26:1018 (May 2000), LR 26:2579 (November 2000).

§479. Records of Testing Entry Control Devices for Very High Radiation Areas

A. Each licensee or registrant shall maintain records of tests made pursuant to LAC 33:XV.438.B.9 on entry control devices for very high radiation areas. These records must include the date, time, and results of each such test of function.

B. The licensee or registrant shall retain the records required by LAC 33:XV.479.A for three years after the record is made.

AUTHORITY NOTE: Promulgated in accordance with R.S. 30:2001 et seq.

HISTORICAL NOTE: Promulgated by the Department of Environmental Quality, Office of Air Quality and Radiation

Protection, Radiation Protection Division, LR 19:1421 (November 1993).

§480. Form of Records

A. Each record required by this Chapter shall be legible throughout the specified retention period. The record shall be the original or a reproduced copy or a microform, provided that the copy or microform is authenticated by authorized personnel and that the microform is capable of producing a clear copy throughout the required retention period. The record may also be stored in electronic media with the capability for producing legible, accurate, and complete records during the required retention period. Records such as letters, drawings, and specifications shall include all pertinent information, such as stamps, initials, and signatures. The licensee shall maintain adequate safeguards against tampering with and loss of records.

AUTHORITY NOTE: Promulgated in accordance with R.S. 30:2001 et seq.

HISTORICAL NOTE: Promulgated by the Department of Environmental Quality, Office of Air Quality and Radiation Protection, Radiation Protection Division, LR 19:1421 (November 1993).

Subchapter J. Reports

§485. Reports of Stolen, Lost, or Missing Licensed or Registered Sources of Radiation

A. Telephone Reports. Each licensee or registrant shall report to the Office of Environmental Compliance by telephone at (225) 765-0160 as follows:

1. immediately after its occurrence becomes known to the licensee or registrant, stolen, lost, or missing licensed or registered radioactive material in an aggregate quantity equal to or greater than 1,000 times the quantity specified in LAC 33:XV.499.Appendix C under such circumstances that it appears to the licensee or registrant that an exposure could result to individuals in unrestricted areas;

2. within 30 days after its occurrence becomes known to the licensee or registrant, lost, stolen, or missing licensed or registered radioactive material in an aggregate quantity greater than 10 times the quantity specified in LAC 33:XV.499.Appendix C that is still missing; or

3. immediately after its occurrence becomes known to the registrant, a stolen, lost, or missing radiation machine.

B. Written Reports. Each licensee or registrant required to make a report in accordance with LAC 33:XV.485.A shall, within 30 days after making the telephone report, make a written report to the Office of Environmental Compliance using the procedures provided in LAC 33:I.3925.B and C and setting forth the following information:

1. a description of the licensed or registered source of radiation involved, including, for radioactive material, the kind, quantity, and chemical and physical form; and, for radiation machines, the manufacturer, model and serial number, type and maximum energy of radiation emitted;

2. a description of the circumstances under which the loss or theft occurred;

3. a statement of disposition, or probable disposition, of the licensed or registered source of radiation involved;

4. exposures of individuals to radiation, circumstances under which the exposures occurred, and the possible total effective dose equivalent to persons in unrestricted areas;

5. actions that have been taken, or will be taken, to recover the source of radiation; and

6. procedures or measures that have been, or will be, adopted to ensure against a recurrence of the loss or theft of licensed or registered sources of radiation.

C. Subsequent to filing the written report, the licensee or registrant shall also report to the Office of Environmental Compliance in the manner provided in LAC 33:I.3925.B and C additional substantive information on the loss or theft within 30 days after the licensee or registrant learns of such information.

D. The licensee or registrant shall prepare any report filed with the Office of Environmental Compliance pursuant to this Section so that names of individuals who may have received exposure to radiation are stated in a separate and detachable portion of the report.

AUTHORITY NOTE: Promulgated in accordance with R.S. 30:2001 et seq.

HISTORICAL NOTE: Promulgated by the Department of Environmental Quality, Office of Air Quality and Radiation Protection, Radiation Protection Division, LR 19:1421 (November 1993), amended by the Office of Environmental Assessment, Environmental Planning Division, LR 26:2579 (November 2000), LR 30:1678 (August 2004).

§486. Notification of Incidents

A. Immediate Notification. Notwithstanding other requirements for notification, each licensee or registrant shall immediately report to the Office of Environmental Compliance by telephone at (225) 765-0160 in accordance with LAC 33:I.3923 each event involving a source of radiation possessed by the licensee or registrant that may have caused or threatens to cause any of the following conditions:

1. an individual to receive:

a. a total effective dose equivalent of 0.25 Sv (25 rem) or more;

b. a lens dose equivalent of 0.75 Sv (75 rem) or more; or

c. a shallow dose equivalent to the skin or extremities or a total organ dose equivalent of 2.5 Gy (250 rad) or more; or

2. the release of radioactive material, inside or outside of a restricted area, so that, had an individual been present for 24 hours, the individual could have received an intake five times the occupational ALI. This provision does not apply to locations where personnel are not normally

stationed during routine operations, such as hot-cells or process enclosures.

B. Twenty-Four Hour Notification. Each licensee or registrant shall, within 24 hours of discovery of the event, report to the Office of Environmental Compliance by telephone at (225) 765-0160 in accordance with LAC 33:I.3923 each event involving loss of control of a licensed or registered source of radiation possessed by the licensee or registrant that may have caused, or threatens to cause, any of the following conditions:

1. an individual to receive, in a period of 24 hours:

a. a total effective dose equivalent exceeding 0.05 Sv (5 rem);

b. a lens dose equivalent exceeding 0.15 Sv (15 rem); or

c. a shallow dose equivalent to the skin or extremities or a total organ dose equivalent exceeding 0.5 Sv (50 rem); or

2. the release of radioactive material, inside or outside of a restricted area, so that, had an individual been present for 24 hours, the individual could have received an intake in excess of one occupational ALI. This provision does not apply to locations where personnel are not normally stationed during routine operations, such as hot-cells or process enclosures.

C. Licensees or registrants shall make the reports required by Subsections A and B of this Section through initial contact by telephone and shall confirm the initial contact by telegram, mailgram, or facsimile to the Office of Environmental Compliance or by e-mail utilizing the Incident Report Form and procedures found on the department's website under the key subject title "Surveillance."

D. The licensee or registrant shall prepare each report filed with the department in accordance with this Section so that names of individuals who have received exposure to sources of radiation are stated in a separate and detachable portion of the report.

E. The provisions of this Section do not apply to doses that result from planned special exposures, provided such doses are within the limits for planned special exposures and are reported in accordance with LAC 33:XV.488.

AUTHORITY NOTE: Promulgated in accordance with R.S. 30:2001 et seq.

HISTORICAL NOTE: Promulgated by the Department of Environmental Quality, Office of Air Quality and Radiation Protection, Radiation Protection Division, LR 19:1421 (November 1993), amended LR 22:973 (October 1996), amended by the Office of Environmental Assessment, Environmental Planning Division, LR 26:2579 (November 2000), LR 26:2770 (December 2000), LR 30:1678 (August 2004), amended by the Office of Environmental Assessment, LR 30:2029 (September 2004).

§487. Reports of Exposures, Radiation Levels, and Concentrations of Radioactive Material Exceeding the Constraints or Limits

A. Reportable Events. In addition to the notification required by LAC 33:XV.486, each licensee or registrant shall submit a written report to the Office of Environmental Compliance using the procedures provided in LAC 33:I.3925.B and C within 30 days after learning of any of the following occurrences:

1. incidents for which notification is required by LAC 33:XV.486;

2. doses in excess of any of the following:

a. the occupational dose limits for adults in LAC 33:XV.410;

b. the occupational dose limits for a minor in LAC 33:XV.416;

c. the limits for an embryo/fetus of a declared pregnant woman in LAC 33:XV.417;

d. the limits for an individual member of the public in LAC 33:XV.421;

e. any applicable limit in the license or registration; or

f. the ALARA constraints for air emissions established under LAC 33:XV.406.D;

3. levels of radiation or concentrations of radioactive material in:

a. a restricted area in excess of applicable limits in the license or registration; or

b. an unrestricted area in excess of 10 times the applicable limit set forth in this Chapter or in the license or registration, whether or not involving exposure of any individual in excess of the limits in LAC 33:XV.421; or

4. for licensees subject to the provisions of U.S. Environmental Protection Agency's generally applicable environmental radiation standards in 40 CFR Part 190, levels of radiation or releases of radioactive material in excess of those standards, or of license conditions related to those standards.

B. Contents of Reports

1. Each report required by LAC 33:XV.487.A shall describe the extent of exposure of individuals to radiation and radioactive material, including, as appropriate:

a. estimates of each individual's dose;

b. the levels of radiation and concentrations of radioactive material involved;

c. the cause of the elevated exposures, dose rates, or concentrations;

d. corrective steps taken or planned to ensure against a recurrence, including the schedule for achieving conformance with applicable limits, ALARA constraints,

generally applicable environmental standards, and associated license or registration conditions; and

e. information required by LAC 33:XV.547.E if the overexposure involves failure of safety components of radiography equipment.

2. Each report filed in accordance with Subsection A of this Section shall include for each occupationally overexposed individual the name, driver's license or state identification number and the issuing state, and date of birth. With respect to the limit for the embryo/fetus in LAC 33:XV.417, the identifiers should be those of the declared pregnant woman. The report shall be prepared so that this information is stated in a separate and detachable portion of the report.

C. All licensees or registrants who make reports pursuant to LAC 33:XV.487.A shall submit the report in writing to the department.

AUTHORITY NOTE: Promulgated in accordance with R.S. 30:2001 et seq.

HISTORICAL NOTE: Promulgated by the Department of Environmental Quality, Office of Air Quality and Radiation Protection, Radiation Protection Division, LR 19:1421 (November 1993), amended by the Office of Environmental Assessment, Environmental Planning Division, LR 26:2579 (November 2000), LR 26:2771 (December 2000), LR 27:1231 (August 2001), LR 30:1679 (August 2004), amended by the Office of Environmental Assessment, LR 30:2804 (December 2004).

§488. Reports of Planned Special Exposures

A. The licensee or registrant shall submit a written report to the Office of Environmental Compliance, Emergency and Radiological Services Division, within 30 days following any planned special exposure conducted in accordance with LAC 33:XV.415, informing the department that a planned special exposure was conducted and indicating the date the planned special exposure occurred and the information required by LAC 33:XV.475.

AUTHORITY NOTE: Promulgated in accordance with R.S. 30:2001 et seq.

HISTORICAL NOTE: Promulgated by the Department of Environmental Quality, Office of Air Quality and Radiation Protection, Radiation Protection Division, LR 19:1421 (November 1993), amended by the Office of Environmental Assessment, Environmental Planning Division, LR 26:2579 (November 2000), amended by the Office of the Secretary, Legal Affairs Division, LR 31:2530 (October 2005).

§490. Reports of Individual Monitoring

A. This Section applies to each person licensed or registered by the department to:

1. possess or use sources of radiation for purposes of industrial radiography pursuant to LAC 33:XV.Chapters 3 and 5;

2. receive radioactive waste from other persons for disposal pursuant to LAC 33:XV.Chapter 13; or

3. possess or use at any time, for purposes of processing or manufacturing for distribution pursuant to LAC 33:XV.Chapter 3 or 7, radioactive material in quantities exceeding any one of the following quantities:

Radionuclide	Activity[a]	
	Ci	GBq
Cesium-137	1	37
Cobalt-60	1	37
Gold-198	100	3,700
Iodine-131	1	37
Iridium-192	10	370
Krypton-85	1,000	37,000
Promethium-147	10	370
Technetium-99m	1,000	37,000

[a] The department may require as a license condition, or by rule or regulation, reports from licensees or registrants who are licensed or registered to use radionuclides not on this list, in quantities sufficient to cause comparable radiation levels.

B. Each licensee or registrant in a category listed in Subsection A of this Section shall submit to the Office of Environmental Compliance, Emergency and Radiological Services Division, an annual report of the results of individual monitoring carried out by the licensee or registrant for each individual for whom monitoring was required by LAC 33:XV.431 during that year. The licensee or registrant may include additional data for individuals for whom monitoring was provided but not required. The licensee or registrant shall use department Form DRC-5 or equivalent or electronic media containing all the information required by department Form DRC-5.

C. The licensee or registrant shall file the report required by Subsection B of this Section, covering the preceding year, on or before April 30 of each year. The licensee or registrant shall submit the report to the Office of Environmental Compliance, Emergency and Radiological Services Division.

AUTHORITY NOTE: Promulgated in accordance with R.S. 30:2001 et seq.

HISTORICAL NOTE: Promulgated by the Department of Environmental Quality, Office of Air Quality and Radiation Protection, Radiation Protection Division, LR 19:1421 (November 1993), amended by the Office of Environmental Assessment, Environmental Planning Division, LR 26:2579 (November 2000), amended by the Office of the Secretary, Legal Affairs Division, LR 31:2530 (October 2005).

§491. Notifications and Reports to Individuals

A. Requirements for notification and reports to individuals of exposure to radiation or radioactive material are specified in LAC 33:XV.1013.

B. When a licensee or registrant is required pursuant to LAC 33:XV.487 to report to the department any exposure of an individual to radiation or radioactive material, the licensee or registrant shall also notify the individual. Such notice shall be transmitted at a time not later than the transmittal to the department and shall comply with the provisions of LAC 33:XV.1013.A.

AUTHORITY NOTE: Promulgated in accordance with R.S. 30:2001 et seq.

HISTORICAL NOTE: Promulgated by the Department of Environmental Quality, Office of Air Quality and Radiation Protection, Radiation Protection Division, LR 19:1421 (November

1993), amended by the Office of Environmental Assessment, Environmental Planning Division, LR 26:2580 (November 2000).

§492. Reports of Leaking or Contamination From Sealed Sources

A. The licensee or registrant shall file a report within five days with the Office of Environmental Compliance using the procedures provided in LAC 33:I.3925.B and C if the test for leakage or contamination required in accordance with LAC 33:XV.426 indicates a sealed source is leaking or a source of contamination. The report shall include the equipment involved, its model number and serial number if assigned, the estimated activity of the source, the test results, the date of the test, and the corrective action taken.

AUTHORITY NOTE: Promulgated in accordance with R.S. 30:2001 et seq.

HISTORICAL NOTE: Promulgated by the Department of Environmental Quality, Office of Air Quality and Radiation Protection, Radiation Protection Division, LR 19:1421 (November 1993), amended by the Office of Environmental Assessment, Environmental Planning Division, LR 26:2580 (November 2000), LR 30:1173 (June 2004), LR 30:1679 (August 2004).

Subchapter K. Additional Requirements

§496. Vacating Premises

A. Each specific licensee or registrant shall, no less than 30 days before vacating or relinquishing possession or control of premises that may have been contaminated with radioactive material as a result of his activities, notify the Office of Environmental Compliance, Emergency and Radiological Services Division, in writing of intent to vacate. When deemed necessary by the department, the licensee shall decontaminate the premises in such a manner as the department may specify.

AUTHORITY NOTE: Promulgated in accordance with R.S. 30:2001 et seq.

HISTORICAL NOTE: Promulgated by the Department of Environmental Quality, Office of Air Quality and Radiation Protection, Radiation Protection Division, LR 19:1421 (November 1993), amended by the Office of Environmental Assessment, Environmental Planning Division, LR 26:2580 (November 2000), amended by the Office of the Secretary, Legal Affairs Division, LR 31:2530 (October 2005).

Subchapter Z. Appendices

§499. Appendices A, B, C, D, E

Appendix A
Assigned Protection Factors for Respirators[a]

Type of Respirator	Operating Mode	Assigned Protection Factors (APF)
I. Air-Purifying Respirators [Particulate[b] Only][c]		
Filtering facepiece, disposable[d]	Negative pressure	([d])
Facepiece, half[e]	Negative pressure	10
Facepiece, full	Negative pressure	100
Facepiece, half	Powered air-purifying respirators	50
Facepiece, full	Powered air-purifying respirators	1000
Helmet/hood	Powered air-purifying respirators	1000
Facepiece, loose fitting	Powered air-purifying respirators	25
II. Atmosphere-Supplying Respirators [particulate, gases, and vapors[f]]		
1. Airline Respirator:		
Facepiece, half	Demand	10
Facepiece, half	Continuous flow	50
Facepiece, half	Pressure demand	50
Facepiece, full	Demand	100
Facepiece, full	Continuous flow	1000
Facepiece, full	Pressure demand	1000
Helmet/hood	Continuous flow	1000
Facepiece, loose-fitting	Continuous flow	25
Suit	Continuous flow	([g])
2. Self-Contained Breathing Apparatus (SCBA):		
Facepiece, full	Demand	100[h]
Facepiece, full	Pressure demand	10,000[i]
Facepiece, full	Demand, recirculating	100[h]
Facepiece, full	Positive pressure, recirculating	10,000[i]
III. Combination Respirators		
Any combination of air-purifying and atmosphere-supplying respirators	Assigned protection factor for type and mode of protection as listed above	

[a] These assigned protection factors apply only in a respiratory protection program that meets the requirements of this Chapter. They are applicable only to airborne radiological hazards and may not be appropriate in circumstances when chemical or other respiratory hazards exist instead of, or in addition to, radioactive hazards. Selection and use of respirators for such circumstances must also comply with the U.S. Department of Labor regulations. Radioactive contaminants for which the concentration values in Table 1, Column 3 of LAC 33:XV.499.Appendix B are based on internal dose due to inhalation may, in addition, present external exposure hazards at higher concentrations. Under these circumstances limitations on occupancy may have to be governed by external dose limits.

[b] Air-purifying respirators with APF of less than 100 must be equipped with particulate filters that are at least 95 percent efficient. Air-purifying respirators with APFs equal to 100 must be equipped with particulate filters that are at least 99 percent efficient. Air-purifying respirators with APFs greater than 100 must be equipped with particulate filters that are at least 99.97 percent efficient.

[c] The licensee may apply to the department for the use of an APF greater than 1 for sorbent cartridges, as protection against airborne radioactive gases and vapors (e.g., radioiodine).

[d] Licensees may permit individuals to use this type of respirator, who have not been medically screened or fit tested on such respirator, provided that no credit be taken for their use in estimating intake or dose. It is also recognized that it is difficult to perform an effective positive or negative pressure pre-use user seal check on this type of device. All other respiratory protection program requirements listed in LAC 33:XV.442 apply. An assigned protection factor has not been assigned for these devices. However, an APF equal to 10 may be used if the licensee can demonstrate a fit factor of at least 100 by use of a validated or evaluated, qualitative or quantitative fit test.

[e] Under-chin type only. No distinction is made in this Appendix between elastomeric half-masks with replaceable cartridges and those designed with the filter medium as an integral part of the facepiece (e.g., disposable or reusable disposable). Both types are acceptable so long as the seal area of the latter contains some substantial type of seal-enhancing material such as rubber or plastic, the two or more suspension straps are adjustable, the filter medium is at least 95 percent efficient, and all other requirements of this Chapter are met.

[f] The assigned protection factors for gases and vapors are not applicable to radioactive contaminants that present an absorption or submersion hazard. For tritium oxide vapor, approximately one-third of the intake occurs by absorption through the skin, so that an overall protection factor of 3 is appropriate when atmosphere-supplying respirators are used to protect against tritium oxide. Exposure to radioactive noble gases is not considered a significant respiratory hazard and protective actions for these contaminants should be based on external (submersion) dose considerations.

[g] No National Institute for Occupational Safety and Health (NIOSH) approval schedule is currently available for atmosphere supplying suits. This equipment may be used in an acceptable respiratory protection program as long as all the other minimum program requirements, with the exception of fit testing, are met (i.e., LAC 33:XV.442).

[h] The licensee should implement institutional controls to ensure that these devices are not used in areas immediately dangerous to life or health (IDLH).

[i] This type of respirator may be used as an emergency device in unknown concentrations for protection against inhalation hazards. External radiation hazards and other limitations to permitted exposure, such as skin absorption, shall be taken into account in these circumstances. This device may not be used by any individual who experiences perceptible outward leakage of breathing gas while wearing the device.

Appendix B

Annual Limits on Intake (ALI) and Derived Air Concentrations (DAC) of Radionuclides for Occupational Exposure; Effluent Concentrations; Concentrations for Release to Sanitary Sewerage

Introduction

For each radionuclide, Table I indicates the chemical form which is to be used for selecting the appropriate ALI or DAC value. The ALIs and DACs for inhalation are given for an aerosol with an activity median aerodynamic diameter (AMAD) of 1 µm, micron, and for three classes (D,W,Y) of radioactive material, which refer to their retention (approximately days, weeks, or years) in the pulmonary region of the lung. This classification applies to a range of clearance half-times for D if less than 10 days, for W from 10 to 100 days, and for Y greater than 100 days. The class (D, W, or Y) given in the column headed "Class" applies only to the inhalation ALIs and DACs given in Table I, columns 2 and 3. Table II provides concentration limits for airborne and liquid effluents released to the general environment. Table III provides concentration limits for discharges to sanitary sewerage systems.

[NOTE: The values in Tables I, II, and III are presented in the computer "E" notation. In this notation a value of 6E-02 represents a value of 6×10^{-2} or 0.06, 6E+2 represents 6×10^{2} or 600, and 6E+0 represents 6×10^{0} or 6.]

Table I "Occupational Values"

Note that the columns in Table I of this Appendix captioned, "Oral Ingestion ALI," "Inhalation," "ALI," and "DAC," are applicable to occupational exposure to radioactive material.

The ALIs in this Appendix are the annual intakes of a given radionuclide by the reference man, which would result in either a committed effective dose equivalent (CEDE) of 0.05 Sv (5 rem), stochastic ALI, or a committed dose equivalent of 0.5 Sv (50 rem) to an organ or tissue, non-stochastic ALI. The stochastic ALIs were derived to result in a risk, due to irradiation of organs and tissues, comparable to the risk associated with deep dose equivalent to the whole body of 0.05 Sv (5 rem). The derivation includes multiplying the committed dose equivalent to an organ or tissue by a weighting factor, w_T. This weighting factor is the proportion of the risk of stochastic effects resulting from irradiation of the organ or tissue, T, to the total risk of stochastic effects when the whole body is irradiated uniformly. The values of w_T are listed under the definition of weighting factor in LAC 33:XV.403. The non-stochastic ALIs were derived to avoid non-stochastic effects, such as prompt damage to tissue or reduction in organ function.

A value of $w_T = 0.06$ is applicable to each of the five organs or tissues in the "remainder" category receiving the highest dose equivalents, and the dose equivalents of all other remaining tissues may be disregarded. The following portions of the GI tract—stomach, small intestine, upper large intestine, and lower large intestine—are to be treated as four separate organs.

Note that the dose equivalents for an extremity, skin, and lens of the eye are not considered in computing the CEDE but are subject to limits that must be met separately.

When an ALI is defined by the stochastic dose limit, this value alone is given. When an ALI is determined by the non-stochastic dose limit to an organ, the organ or tissue to which the limit applies is shown, and the ALI for the stochastic limit is shown in parentheses. Abbreviated organ or tissue designations are used:

1. LLI wall = lower large intestine wall;
2. St wall = stomach wall;
3. Blad wall = bladder wall; and
4. Bone surf = bone surface.

The use of the ALIs listed first, the more limiting of the stochastic and non-stochastic ALIs, will ensure that non-stochastic effects are avoided and that the risk of stochastic effects is limited to an acceptably low value. If, in a particular situation involving a radionuclide for which the non-stochastic ALI is limiting, the use of that non-stochastic ALI is considered unduly conservative, the licensee or registrant may use the stochastic ALI to determine the committed effective dose equivalent. However, the licensee or registrant shall also ensure that the 0.5 Sv (50 rem) dose equivalent limit for any organ or tissue is not exceeded by the sum of the external deep dose equivalent plus the internal committed dose equivalent to that organ, not the effective dose. For the case where there is no external dose contribution, this would be demonstrated if the sum of the fractions of the nonstochastic ALIs (ALI_{ns}) that contribute to the committed dose equivalent to the organ receiving the highest dose does not exceed unity, that is, Σ (intake [in µCi] of each radionuclide/ALI_{ns}) ≤ 1.0. If there is an external deep dose equivalent contribution of H_d, then this sum must be less than 1 - (H_d/50), instead of ≤ 1.0.

Note that the dose equivalents for an extremity, skin, and lens of the eye are not considered in computing the committed effective dose equivalent but are subject to limits that must be met separately.

The derived air concentration (DAC) values are derived limits intended to control chronic occupational exposures. The relationship between the DAC and the ALI is given by:

$$DAC = \frac{\text{ALI (in } \mu C_i)}{(2000\ hrs / working\ \ yr \text{ X } 60 \text{ min/hr X } 2 \text{ x } 10^4\ ml / \text{min})}$$

$$= \frac{ALI}{2.4\ x\ 10^4}\ \mu\text{Ci/ml}$$

where:

2×10^4 ml is the volume of air breathed per minute at work by the reference man under working conditions of light work.

The DAC values relate to one of two modes of exposure: either external submersion or the internal committed dose equivalents resulting from inhalation of radioactive materials. DACs based upon submersion are for immersion in a semi-infinite cloud of uniform concentration and apply to each radionuclide separately.

The ALI and DAC values include contributions to exposure by the single radionuclide named and any ingrowth of daughter radionuclides produced in the body by decay of the parent. However, intakes that include both the parent and daughter radionuclides should be treated by the general method appropriate for mixtures.

The values of ALI and DAC do not apply directly when the individual both ingests and inhales a radionuclide, when the individual is exposed to a mixture of radionuclides by either inhalation or ingestion or both, or when the individual is exposed to both internal and external irradiation. See LAC 33:XV.411. When an individual is exposed to radioactive materials which fall under several of the translocation classifications of the same radionuclide (such as Class D, Class W, or Class Y), the exposure may be evaluated as if it were a mixture of different radionuclides.

It should be noted that the classification of a compound as Class D, W, or Y is based on the chemical form of the compound and does not take into account the radiological half-life of different radioisotopes. For this reason, values are given for Class D, W, and Y compounds, even for very short-lived radionuclides.

Table II "Effluent Concentrations"

The columns in Table II of this Appendix captioned "Air" and "Water" are applicable to the assessment and control of dose to the public, particularly in the implementation of the provisions of LAC 33:XV.422. The concentration values given in Columns 1 and 2 of Table II are equivalent to the radionuclide concentrations which, if inhaled or ingested continuously over the course of a year, would produce a total effective dose equivalent of 0.5 mSv (0.05 rem).

Consideration of non-stochastic limits has not been included in deriving the air and water effluent concentration limits because non-stochastic effects are presumed not to occur at or below the dose levels established for individual members of the public. For radionuclides, where the non-stochastic limit was governing in deriving the occupational DAC, the stochastic ALI was used in deriving the corresponding airborne effluent limit in Table II. For this reason, the DAC and airborne effluent limits are not always proportional, as was the case in Appendix A of Part D of the eighth edition of Volume I of the *Suggested State Regulations for Control of Radiation*.

The air concentration values listed in Table II, Column 1 were derived by one of two methods. For those radionuclides for which the stochastic limit is governing, the occupational stochastic inhalation ALI was divided by 2.4 x 10^9, relating the inhalation ALI to the DAC, as explained above, and then divided by a factor of 300. The factor of 300 includes the following components: a factor of 50 to relate the 0.05 Sv (5 rem) annual occupational dose limit to the 1mSv (0.1 rem) limit for members of the public; a factor of three to adjust for the difference in exposure time and the inhalation rate for a worker and that for members of the public; and a factor of two to adjust the occupational values, derived for adults, so that they are applicable to other age groups.

For those radionuclides for which submersion, that is external dose, is limiting, the occupational DAC in Table I, Column 3 was divided by 219. The factor of 219 is composed of a factor of 50, as described above, and a factor of 4.38 relating occupational exposure for 2,000 hours per year to full-time exposure (8,760 hours per year). Note that an additional factor of two for age considerations is not warranted in the submersion case.

The water concentrations were derived by taking the most restrictive occupational stochastic oral ingestion ALI and dividing by 7.3 x 10^7. The factor of 7.3 x 10^7 (ml) includes the following components: the factors of 50 and 2 described above and a factor of 7.3 x 10^5 (ml) which is the annual water intake of the reference man.

Note 2 of this Appendix provides groupings of radionuclides which are applicable to unknown mixtures of radionuclides. These groupings, including occupational inhalation ALIs and DACs, air and water effluent concentrations and releases to sewer, require demonstrating that the most limiting radionuclides in successive classes are absent. The limit for the unknown mixture is defined when the presence of one of the listed radionuclides cannot be definitely excluded as being present, either from knowledge of the radionuclide composition of the source or from actual measurements.

Table III "Releases to Sewers"

The monthly average concentrations for release to sanitary sewerage are applicable to the provisions in LAC 33:XV.462. The concentration values were derived by taking the most restrictive occupational stochastic oral ingestion ALI and dividing by 7.3 x 10^6 (ml). The factor of 7.3 x 10^6 (ml) is composed of a factor of 7.3 x 10^5 (ml), the annual water intake by a reference man, and a factor of 10, such that the concentrations, if the sewage released by the licensee were the only source of water ingested by a reference man during a year, would result in a committed effective dose equivalent of 5 mSv (0.5 rem).

List of Elements - Atomic Numbers		
Name	**Symbol**	**Number**
Actinium	Ac	89
Aluminum	Al	13
Americium	Am	95
Antimony	Sb	51
Argon	Ar	18
Arsenic	As	33
Astatine	At	85
Barium	Ba	56
Berkelium	Bk	97

List of Elements - Atomic Numbers		
Name	**Symbol**	**Number**
Beryllium	Be	4
Bismuth	Bi	83
Bromine	Br	35
Cadmium	Cd	48
Calcium	Ca	20
Californium	Cf	98
Carbon	C	6
Cerium	Ce	58
Cesium	Cs	55
Chlorine	Cl	17
Chromium	Cr	24
Cobalt	Co	27
Copper	Cu	29
Curium	Cm	96
Dysprosium	Dy	66
Einsteinium	Es	99
Erbium	Er	68
Europium	Eu	63
Fermium	Fm	100
Fluorine	F	9
Francium	Fr	87
Gadolinium	Gd	64
Gallium	Ga	31
Germanium	Ge	32
Gold	Au	79
Hafnium	Hf	72
Holmium	Ho	67
Hydrogen	H	1
Indium	In	49
Iodine	I	53
Iridium	Ir	77
Iron	Fe	26
Krypton	Kr	36
Lanthanum	La	57
Lead	Pb	82
Lutetium	Lu	71
Magnesium	Mg	12
Manganese	Mn	25
Mendelevium	Md	101
Mercury	Hg	80
Molybdenum	Mo	42
Neodymium	Nd	60
Neptunium	Np	93
Nickel	Ni	28
Niobium	Nb	41
Osmium	Os	76
Palladium	Pd	46
Phosphorus	P	15
Platinum	Pt	78
Plutonium	Pu	94
Polonium	Po	84
Potassium	K	19
Praseodymium	Pr	59
Promethium	Pm	61
Protactinium	Pa	91
Radium	Ra	88
Radon	Rn	86
Rhenium	Re	75
Rhodium	Rh	45
Rubidium	Rb	37
Ruthenium	Ru	44
Samarium	Sm	62
Scandium	Sc	21
Selenium	Se	34
Silicon	Si	14
Silver	Ag	47

List of Elements - Atomic Numbers		
Name	**Symbol**	**Number**
Sodium	Na	11
Strontium	Sr	38
Sulfur	S	16
Tantalum	Ta	73
Technetium	Tc	43
Tellurium	Te	52
Terbium	Tb	65
Thallium	Tl	81
Thorium	Th	90
Thulium	Tm	69
Tin	Sn	50

List of Elements - Atomic Numbers		
Name	**Symbol**	**Number**
Titanium	Ti	22
Tungsten	W	74
Uranium	U	92
Vanadium	V	23
Xenon	Xe	54
Ytterbium	Yb	70
Yttrium	Y	39
Zinc	Zn	30
Zirconium	Zr	40

Tables I, II, and III

Atomic No.	Radionuclide	Class	Table I Occupational Values			Table II Effluent Concentrations		Table III Releases to Sewers
			Col. 1	Col. 2	Col. 3	Col. 1	Col. 2	Monthly Average Concen-tration (µCi/ml)
			Oral Ingestion ALI (µCi)	Inhalation ALI (µCi)	Inhalation DAC (µCi/ml)	Air (µCi/ml)	Water (µCi/ml)	
1	Hydrogen-3	Water, DAC includes skin absorption	8E+4	8E+4	2E-5	1E-7	1E-3	1E-2
		Gas (HT or T_2) Submersion[1]: Use above values as HT and T2 oxidize in air and in the body to HTO.						
4	Beryllium-7	W, all compounds except those given for Y	4E+4	2E+4	9E-6	3E-8	6E-4	6E-3
		Y, oxides, halides, and nitrates	-	2E+4	8E-6	3E-8	-	-
4	Beryllium-10	W, see ^{7}Be	1E+3	2E+2	6E-8	2E-10	-	-
			LLI wall (1E+3)	-	-	-	2E-5	2E-4
		Y, see ^{7}Be	-	1E+1	6E-9	2E-11	-	-
6	Carbon-11[2]	Monoxide	-	1E+6	5E-4	2E-6	-	-
		Dioxide	-	6E+5	3E-4	9E-7	-	-
		Compounds	4E+5	4E+5	2E-4	6E-7	6E-3	6E-2
6	Carbon-14	Monoxide	-	2E+6	7E-4	2E-6	-	-
		Dioxide	-	2E+5	9E-5	3E-7	-	-
		Compounds	2E+3	2E+3	1E-6	3E-9	3E-5	3E-4
9	Fluorine-18[2]	D, fluorides of H, Li, Na, K, Rb, Cs, and Fr	5E+4	7E+4	3E-5	1E-7	-	-
			St wall (5E+4)	-	-	-	7E-4	7E-3
		W, fluorides of Be, Mg, Ca, Sr, Ba, Ra, Al, Ga, In, Tl, As, Sb, Bi, Fe, Ru, Os, Co, Ni, Pd, Pt, Cu, Ag, Au, Zn, Cd, Hg, Sc, Y, Ti, Zr, V, Nb, Ta, Mn, Tc, and Re	-	9E+4	4E-5	1E-7	-	-
		Y, lanthanum fluoride	-	8E+4	3E-5	1E-7	-	-
11	Sodium-22	D, all compounds	4E+2	6E+2	3E-7	9E-10	6E-6	6E-5
11	Sodium-24	D, all compounds	4E+3	5E+3	2E-6	7E-9	5E-5	5E-4
12	Magnesium-28	D, all compounds except those given for W	7E+2	2E+3	7E-7	2E-9	9E-6	9E-5
		W, oxides, hydroxides, carbides, halides, and nitrates	-	1E+3	5E-7	2E-9	-	-

Tables I, II, and III								
Atomic No.	**Radionuclide**	**Class**	**Table I Occupational Values**			**Table II Effluent Concentrations**		**Table III Releases to Sewers**
			Col. 1	**Col. 2**	**Col. 3**	**Col. 1**	**Col. 2**	**Monthly Average Concen-tration (µCi/ml)**
			Oral Ingestion ALI (µCi)	**Inhalation**		**Air (µCi/ml)**	**Water (µCi/ml)**	
				ALI (µCi)	**DAC (µCi/ml)**			
13	Aluminum-26	D, all compounds except those given for W	4E+2	6E+1	3E-8	9E-11	6E-6	6E-5
		W, oxides, hydroxides, carbides, halides, and nitrates	-	9E+1	4E-8	1E-10	-	-
14	Silicon-31	D, all compounds except those given for W and Y	9E+3	3E+4	1E-5	4E-8	1E-4	1E-3
		W, oxides, hydroxides, carbides, and nitrates	-	3E+4	1E-5	5E-8	-	-
		Y, aluminosilicate glass	-	3E+4	1E-5	4E-8	-	-
14	Silicon-32	D, see ^{31}Si	2E+3	2E+2	1E-7	3E-10	-	-
			LLI wall (3E+3)	-	-	-	4E-5	4E-4
		W, see ^{31}Si	-	1E+2	5E-8	2E-10	-	-
		Y, see ^{31}Si	-	5E+0	2E-9	7E-12	-	-
15	Phosphorus-32	D, all compounds except phosphates given for W	6E+2	9E+2	4E-7	1E-9	9E-6	9E-5
		W, phosphates of Zn^{2+}, S^{3+}, Mg^{2+}, Fe^{3+}, Bi^{3+}, and lanthanides	-	4E+2	2E-7	5E-10	-	-
15	Phosphorus-33	D, see ^{32}P	6E+3	8E+3	4E-6	1E-8	8E-5	8E-4
		W, see ^{32}P	-	3E+3	1E-6	4E-9	-	-
16	Sulfur-35	Vapor	-	1E+4	6E-6	2E-8	-	-
		D, sulfides and sulfates except those given for W	1E+4	2E+4	7E-6	2E-8	-	-
			LLI wall (8E+3)	-	-	-	1E-4	1E-3
		W, elemental sulfur, sulfides of Sr, Ba, Ge, Sn, Pb, As, Sb, Bi, Cu, Ag, Au, Zn, Cd, Hg, W, and Mo. Sulfates of Ca, Sr, Ba, Ra, As, Sb, and Bi	6E+3	2E+3	9E-7	3E-9	-	-
17	Chlorine-36	D, chlorides of H, Li, Na, K, Rb, Cs, and Fr	2E+3	2E+3	1E-6	3E-9	2E-5	2E-4
		W, chlorides of lanthanides, Be, Mg, Ca, Sr, Ba, Ra, Al, Ga, In, Tl, Ge, Sn, Pb, As, Sb, Bi, Fe, Ru, Os, Co, Rh, Ir, Ni, Pd, Pt, Cu, Ag, Au, Zn, Cd, Hg, Sc, Y, Ti, Zr, Hf, V, Nb, Ta, Cr, Mo, W, Mn, Tc, and Re	-	2E+2	1E-7	3E-10	-	-
17	Chlorine-38[2]	D, see ^{36}Cl	2E+4	4E+4	2E-5	6E-8	-	-
			St wall (3E+4)	-	-	-	3E-4	3E-3
		W, see ^{36}Cl	-	5E+4	2E-5	6E-8	-	-
17	Chlorine-39[2]	D, see ^{36}Cl	2E+4	5E+4	2E-5	7E-8	-	-
			St wall (4E+4)	-	-	-	5E-4	5E-3
		W, see ^{36}Cl	-	6E+4	2E-5	8E-8	-	-
18	Argon-37	Submersion[1]	-	-	1E+0	6E-3	-	-
18	Argon-39	Submersion[1]	-	-	2E-4	8E-7	-	-

Tables I, II, and III								
Atomic No.	**Radionuclide**	**Class**	**Table I Occupational Values**			**Table II Effluent Concentrations**		**Table III Releases to Sewers**
			Col. 1	**Col. 2**	**Col. 3**	**Col. 1**	**Col. 2**	**Monthly Average Concen-tration (µCi/ml)**
			Oral Ingestion ALI (µCi)	**Inhalation**		**Air (µCi/ml)**	**Water (µCi/ml)**	
				ALI (µCi)	**DAC (µCi/ml)**			
18	Argon-41	Submersion[1]	-	-	3E-6	1E-8	-	-
19	Potassium-40	D, all compounds	3E+2	4E+2	2E-7	6E-10	4E-6	4E-5
19	Potassium-42	D, all compounds	5E+3	5E+3	2E-6	7E-9	6E-5	6E-4
19	Potassium-43	D, all compounds	6E+3	9E+3	4E-6	1E-8	9E-5	9E-4
19	Potassium-44[2]	D, all compounds	2E+4	7E+4	3E-5	9E-8	-	-
			St wall (4E+4)	-	-	-	5E-4	5E-3
19	Potassium-45[2]	D, all compounds	3E+4	1E+5	5E-5	2E-7	-	-
			St wall (5E+4)	-	-	-	7E-4	7E-3
20	Calcium-41	W, all compounds	3E+3	4E+3	2E-6	-	-	-
			Bone surf (4E+3)	Bone surf (4E+3)	-	5E-9	6E-5	6E-4
20	Calcium-45	W, all compounds	2E+3	8E+2	4E-7	1E-9	2E-5	2E-4
20	Calcium-47	W, all compounds	8E+2	9E+2	4E-7	1E-9	1E-5	1E-4
21	Scandium-43	Y, all compounds	7E+3	2E+4	9E-6	3E-8	1E-4	1E-3
21	Scandium-44m	Y, all compounds	5E+2	7E+2	3E-7	1E-9	7E-6	7E-5
21	Scandium-44	Y, all compounds	4E+3	1E+4	5E-6	2E-8	5E-5	5E-4
21	Scandium-46	Y, all compounds	9E+2	2E+2	1E-7	3E-10	1E-5	1E-4
21	Scandium-47	Y, all compounds	2E+3	3E+3	1E-6	4E-9	-	-
			LLI wall (3E+3)	-	-	-	4E-5	4E-4
21	Scandium-48	Y, all compounds	8E+2	1E+3	6E-7	2E-9	1E-5	1E-4
21	Scandium-49[2]	Y, all compounds	2E+4	5E+4	2E-5	8E-8	3E-4	3E-3
22	Titanium-44	D, all compounds except those given for W and Y	3E+2	1E+1	5E-9	2E-11	4E-6	4E-5
		W, oxides, hydroxides, carbides, halides, and nitrates	-	3E+1	1E-8	4E-11	-	-
		Y, SrTi0	-	6E+0	2E-9	8E-12	-	-
22	Titanium-45	D, see ^{44}Ti	9E+3	3E+4	1E-5	3E-8	1E-4	1E-3
		W, see ^{44}Ti	-	4E+4	1E-5	5E-8	-	-
		Y, see ^{44}Ti	-	3E+4	1E-5	4E-8	-	-
23	Vanadium-47[2]	D, all compounds except those given for W	3E+4	8E+4	3E-5	1E-7	-	-
			St wall (3E+4)	-	-	-	4E-4	4E-3
		W, oxides, hydroxides, carbides, and halides	-	1E+5	4E-5	1E-7	-	-
23	Vanadium-48	D, see ^{47}V	6E+2	1E+3	5E-7	2E-9	9E-6	9E-5
		W, see ^{47}V	-	6E+2	3E-7	9E-10	-	-
23	Vanadium-49	D, see ^{47}V	7E+4	3E+4	1E-5	-	-	-
			LLI wall (9E+4)	Bone surf (3E+4)	-	5E-8	1E-3	1E-2
		W, see ^{47}V	-	2E+4	8E-6	2E-8	-	-
24	Chromium-48	D, all compounds except those given for W and Y	6E+3	1E+4	5E-6	2E-8	8E-5	8E-4
		W, halides and nitrates	-	7E+3	3E-6	1E-8	-	-
		Y, oxides and hydroxides	-	7E+3	3E-6	1E-8	-	-
24	Chromium-49[2]	D, see ^{48}Cr	3E+4	8E+4	4E-5	1E-7	4E-4	4E-3
		W, see ^{48}Cr	-	1E+5	4E-5	1E-7	-	-
		Y, see ^{48}Cr	-	9E+4	4E-5	1E-7	-	-
24	Chromium-51	D, see ^{48}Cr	4E+4	5E+4	2E-5	6E-8	5E-4	5E-3
		W, see ^{48}Cr	-	2E+4	1E-5	3E-8	-	-
		Y, see ^{48}Cr	-	2E+4	8E-6	3E-8	-	-

Tables I, II, and III								
Atomic No.	**Radionuclide**	**Class**	**Table I Occupational Values**			**Table II Effluent Concentrations**		**Table III Releases to Sewers**
			Col. 1	**Col. 2**	**Col. 3**	**Col. 1**	**Col. 2**	**Monthly Average Concen-tration (µCi/ml)**
			Oral Ingestion ALI (µCi)	**Inhalation**		**Air (µCi/ml)**	**Water (µCi/ml)**	
				ALI (µCi)	**DAC (µCi/ml)**			
25	Manganese-51[2]	D, all compounds except those given for W	2E+4	5E+4	2E-5	7E-8	3E-4	3E-3
		W, oxides, hydroxides, halides, and nitrates	-	6E+4	3E-5	8E-8	-	-
25	Manganese-52m[2]	D, see ^{51}Mn	3E+4	9E+4	4E-5	1E-7	-	-
			St wall (4E+4)	-	-	-	5E-4	5E-3
		W, see ^{51}Mn	-	1E+5	4E-5	1E-7	-	-
25	Manganese-52	D, see ^{51}Mn	7E+2	1E+3	5E-7	2E-9	1E-5	1E-4
		W, see ^{51}Mn	-	9E+2	4E-7	1E-9	-	-
25	Manganese-53	D, see ^{51}Mn	5E+4	1E+4	5E-6	-	7E-4	7E-3
			-	Bone surf (2E+4)	-	3E-8	-	-
		W, see ^{51}Mn	-	1E+4	5E-6	2E-8	-	-
25	Manganese-54	D, see ^{51}Mn	2E+3	9E+2	4E-7	1E-9	3E-5	3E-4
		W, see ^{51}Mn	-	8E+2	3E-7	1E-9	-	-
25	Manganese-56	D, see ^{51}Mn	5E+3	2E+4	6E-6	2E-8	7E-5	7E-4
		W, see ^{51}Mn	-	2E+4	9E-6	3E-8	-	-
26	Iron-52	D, all compounds except those given for W	9E+2	3E+3	1E-6	4E-9	1E-5	1E-4
		W, oxides, hydroxides, and halides	-	2E+3	1E-6	3E-9	-	-
26	Iron-55	D, see ^{52}Fe	9E+3	2E+3	8E-7	3E-9	1E-4	1E-3
		W, see ^{52}Fe	-	4E+3	2E-6	6E-9	-	-
26	Iron-59	D, see ^{52}Fe	8E+2	3E+2	1E-7	5E-10	1E-5	1E-4
		W, see ^{52}Fe	-	5E+2	2E-7	7E-10	-	-
26	Iron-60	D, see ^{52}Fe	3E+1	6E+0	3E-9	9E-12	4E-7	4E-6
		W, see ^{52}Fe	-	2E+1	8E-9	3E-11	-	-
27	Cobalt-55	W, all compounds except those given for Y	1E+3	3E+3	1E-6	4E-9	2E-5	2E-4
		Y, oxides, hydroxides, halides, and nitrates	-	3E+3	1E-6	4E-9	-	-
27	Cobalt-56	W, see ^{55}Co	5E+2	3E+2	1E-7	4E-10	6E-6	6E-5
		Y, see ^{55}Co	4E+2	2E+2	8E-8	3E-10	-	-
27	Cobalt-57	W, see ^{55}Co	8E+3	3E+3	1E-6	4E-9	6E-5	6E-4
		Y, see ^{55}Co	4E+3	7E+2	3E-7	9E-10	-	-
27	Cobalt-58m	W, see ^{55}Co	6E+4	9E+4	4E-5	1E-7	8E-4	8E-3
		Y, see ^{55}Co	-	6E+4	3E-5	9E-8	-	-
27	Cobalt-58	W, see ^{55}Co	2E+3	1E+3	5E-7	2E-9	2E-5	2E-4
		Y, see ^{55}Co	1E+3	7E+2	3E-7	1E-9	-	-
27	Cobalt-60m[2]	W, see ^{55}Co	1E+6	4E+6	2E-3	6E-6	-	-
			St wall (1E+6)	-	-	-	2E-2	2E-1
		Y, see ^{55}Co	-	3E+6	1E-3	4E-6	-	-
27	Cobalt-60	W, see ^{55}Co	5E+2	2E+2	7E-8	2E-10	3E-6	3E-5
		Y, see ^{55}Co	2E+2	3E+1	1E-8	5E-11	-	-
27	Cobalt-61[2]	W, see ^{55}Co	2E+4	6E+4	3E-5	9E-8	3E-4	3E-3
		Y, see ^{55}Co	2E+4	6E+4	2E-5	8E-8	-	-
27	Cobalt-62m[2]	W, see ^{55}Co	4E+4	2E+5	7E-5	2E-7	-	-
			St wall (5E+4)	-	-	-	7E-4	7E-3
		Y, see ^{55}Co	-	2E+5	6E-5	2E-7	-	-

Tables I, II, and III								
Atomic No.	Radionuclide	Class	Table I Occupational Values			Table II Effluent Concentrations		Table III Releases to Sewers
			Col. 1	Col. 2	Col. 3	Col. 1	Col. 2	Monthly Average Concen-tration (µCi/ml)
			Oral Ingestion ALI (µCi)	Inhalation ALI (µCi)	Inhalation DAC (µCi/ml)	Air (µCi/ml)	Water (µCi/ml)	
28	Nickel-56	D, all compounds except those given for W	1E+3	2E+3	8E-7	3E-9	2E-5	2E-4
		W, oxides, hydroxides, and carbides	-	1E+3	5E-7	2E-9	-	-
		Vapor	-	1E+3	5E-7	2E-9	-	-
28	Nickel-57	D, see ^{56}Ni	2E+3	5E+3	2E-6	7E-9	2E-5	2E-4
		W, see ^{56}Ni	-	3E+3	1E-6	4E-9	-	-
		Vapor	-	6E+3	3E-6	9E-9	-	-
28	Nickel-59	D, see ^{56}Ni	2E+4	4E+3	2E-6	5E-9	3E-4	3E-3
		W, see ^{56}Ni	-	7E+3	3E-6	1E-8	-	-
		Vapor	-	2E+3	8E-7	3E-9	-	-
28	Nickel-63	D, see ^{56}Ni	9E+3	2E+3	7E-7	2E-9	1E-4	1E-3
		W, see ^{56}Ni	-	3E+3	1E-6	4E-9	-	-
		Vapor	-	8E+2	3E-7	1E-9	-	-
28	Nickel-65	D, see ^{56}Ni	8E+3	2E+4	1E-5	3E-8	1E-4	1E-3
		W, see ^{56}Ni	-	3E+4	1E-5	4E-8	-	-
		Vapor	-	2E+4	7E-6	2E-8	-	-
28	Nickel-66	D, see ^{56}Ni	4E+2	2E+3	7E-7	2E-9	-	-
			LLI wall (5E+2)	-	-	-	6E-6	6E-5
		W, see ^{56}Ni	-	6E+2	3E-7	9E-10	-	-
		Vapor	-	3E+3	1E-6	4E-9	-	-
29	Copper-60[2]	D, all compounds except those given for W and Y	3E+4	9E+4	4E-5	1E-7	-	-
			St wall (3E+4)	-	-	-	4E-4	4E-3
		W, sulfides, halides, and nitrates	-	1E+5	5E-5	2E-7	-	-
		Y, oxides and hydroxides	-	1E+5	4E-5	1E-7	-	-
29	Copper-61	D, see ^{60}Cu	1E+4	3E+4	1E-5	4E-8	2E-4	2E-3
		W, see ^{60}Cu	-	4E+4	2E-5	6E-8	-	-
		Y, see ^{60}Cu	-	4E+4	1E-5	5E-8	-	-
29	Copper-64	D, see ^{60}Cu	1E+4	3E+4	1E-5	4E-8	2E-4	2E-3
		W, see ^{60}Cu	-	2E+4	1E-5	3E-8	-	-
		Y, see ^{60}Cu	-	2E+4	9E-6	3E-8	-	-
29	Copper-67	D, see ^{60}Cu	5E+3	8E+3	3E-6	1E-8	6E-5	6E-4
		W, see ^{60}Cu	-	5E+3	2E-6	7E-9	-	-
		Y, see ^{60}Cu	-	5E+3	2E-6	6E-9	-	-
30	Zinc-62	Y, all compounds	1E+3	3E+3	1E-6	4E-9	2E-5	2E-4
30	Zinc-63[2]	Y, all compounds	2E+4	7E+4	3E-5	9E-8	-	-
			St wall (3E+4)	-	-	-	3E-4	3E-3
30	Zinc-65	Y, all compounds	4E+2	3E+2	1E-7	4E-10	5E-6	5E-5
30	Zinc-69m	Y, all compounds	4E+3	7E+3	3E-6	1E-8	6E-5	6E-4
30	Zinc-69[2]	Y, all compounds	6E+4	1E+5	6E-5	2E-7	8E-4	8E-3
30	Zinc-71m	Y, all compounds	6E+3	2E+4	7E-6	2E-8	8E-5	8E-4
30	Zinc-72	Y, all compounds	1E+3	1E+3	5E-7	2E-9	1E-5	1E-4
31	Gallium-65[2]	D, all compounds except those given for W	5E+4	2E+5	7E-5	2E-7	-	-
			St wall (6E+4)	-	-	-	9E-4	9E-3
		W, oxides, hydroxides, carbides, halides, and nitrates	-	2E+5	8E-5	3E-7	-	-
31	Gallium-66	D, see ^{65}Ga	1E+3	4E+3	1E-6	5E-9	1E-5	1E-4
		W, see ^{65}Ga	-	3E+3	1E-6	4E-9	-	-
31	Gallium-67	D, see ^{65}Ga	7E+3	1E+4	6E-6	2E-8	1E-4	1E-3
		W, see ^{65}Ga	-	1E+4	4E-6	1E-8	-	-
31	Gallium-68[2]	D, see ^{65}Ga	2E+4	4E+4	2E-5	6E-8	2E-4	2E-3
		W, see ^{65}Ga	-	5E+4	2E-5	7E-8	-	-

Tables I, II, and III								
Atomic No.	**Radionuclide**	**Class**	**Table I Occupational Values**			**Table II Effluent Concentrations**		**Table III Releases to Sewers**
			Col. 1	**Col. 2**	**Col. 3**	**Col. 1**	**Col. 2**	**Monthly Average Concen-tration (µCi/ml)**
			Oral Ingestion ALI (µCi)	**Inhalation**		**Air (µCi/ml)**	**Water (µCi/ml)**	
				ALI (µCi)	**DAC (µCi/ml)**			
31	Gallium-70[2]	D, see ^{65}Ga	5E+4	2E+5	7E-5	2E-7	-	-
			St wall (7E+4)	-	-	-	1E-3	1E-2
		W, see ^{65}Ga	-	2E+5	8E-5	3E-7	-	-
31	Gallium-72	D, see ^{65}Ga	1E+3	4E+3	1E-6	5E-9	2E-5	2E-4
		W, see ^{65}Ga	-	3E+3	1E-6	4E-9	-	-
31	Gallium-73	D, see ^{65}Ga	5E+3	2E+4	6E-6	2E-8	7E-5	7E-4
		W, see ^{65}Ga	-	2E+4	6E-6	2E-8	-	-
32	Germanium-66	D, all compounds except those given for W	2E+4	3E+4	1E-5	4E-8	3E-4	3E-3
		W, oxides, sulfides, and halides	-	2E+4	8E-6	3E-8	-	-
32	Germanium-67[2]	D, see ^{66}Ge	3E+4	9E+4	4E-5	1E-7	-	-
			St wall (4E+4)	-	-	-	6E-4	6E-3
		W, see ^{66}Ge	-	1E+5	4E-5	1E-7	-	-
32	Germanium-68	D, see ^{66}Ge	5E+3	4E+3	2E-6	5E-9	6E-5	6E-4
		W, see ^{66}Ge	-	1E+2	4E-8	1E-10	-	-
32	Germanium-69	D, see ^{66}Ge	1E+4	2E+4	6E-6	2E-8	2E-4	2E-3
		W, see ^{66}Ge	-	8E+3	3E-6	1E-8	-	-
32	Germanium-71	D, see ^{66}Ge	5E+5	4E+5	2E-4	6E-7	7E-3	7E-2
		W, see ^{66}Ge	-	4E+4	2E-5	6E-8	-	-
32	Germanium-75[2]	D, see ^{66}Ge	4E+4	8E+4	3E-5	1E-7	-	-
			St wall (7E+4)	-	-	-	9E-4	9E-3
		W, see ^{66}Ge	-	8E+4	4E-5	1E-7	-	-
32	Germanium-77	D, see ^{66}Ge	9E+3	1E+4	4E-6	1E-8	1E-4	1E-3
		W, see ^{66}Ge	-	6E+3	2E-6	8E-9	-	-
32	Germanium-78[2]	D, see ^{66}Ge	2E+4	2E+4	9E-6	3E-8	-	-
			St wall (2E+4)	-	-	-	3E-4	3E-3
		W, see ^{66}Ge	-	2E+4	9E-6	3E-8	-	-
33	Arsenic-69[2]	W, all compounds	3E+4	1E+5	5E-5	2E-7	-	-
			St wall (4E+4)	-	-	-	6E-4	6E-3
33	Arsenic-70[2]	W, all compounds	1E+4	5E+4	2E-5	7E-8	2E-4	2E-3
33	Arsenic-71	W, all compounds	4E+3	5E+3	2E-6	6E-9	5E-5	5E-4
33	Arsenic-72	W, all compounds	9E+2	1E+3	6E-7	2E-9	1E-5	1E-4
33	Arsenic-73	W, all compounds	8E+3	2E+3	7E-7	2E-9	1E-4	1E-3
33	Arsenic-74	W, all compounds	1E+3	8E+2	3E-7	1E-9	2E-5	2E-4
33	Arsenic-76	W, all compounds	1E+3	1E+3	6E-7	2E-9	1E-5	1E-4
33	Arsenic-77	W, all compounds	4E+3	5E+3	2E-6	7E-9	-	-
			LLI wall (5E+3)	-	-	-	6E-5	6E-4
33	Arsenic-78[2]	W, all compounds	8E+3	2E+4	9E-6	3E-8	1E-4	1E-3
34	Selenium-70[2]	D, all compounds except those given for W	2E+4	4E+4	2E-5	5E-8	1E-4	1E-3
		W, oxides, hydroxides, carbides, and elemental Se	1E+4	4E+4	2E-5	6E-8	-	-
34	Selenium-73m[2]	D, see ^{70}Se	6E+4	2E+5	6E-5	2E-7	4E-4	4E-3
		W, see ^{70}Se	3E+4	1E+5	6E-5	2E-7	-	-
34	Selenium-73	D, see ^{70}Se	3E+3	1E+4	5E-6	2E-8	4E-5	4E-4
		W, see ^{70}Se	-	2E+4	7E-6	2E-8	-	-
34	Selenium-75	D, see ^{70}Se	5E+2	7E+2	3E-7	1E-9	7E-6	7E-5
		W, see ^{70}Se	-	6E+2	3E-7	8E-10	-	-
34	Selenium-79	D, see ^{70}Se	6E+2	8E+2	3E-7	1E-9	8E-6	8E-5
		W, see ^{70}Se	-	6E+2	2E-7	8E-10	-	-

Tables I, II, and III								
Atomic No.	**Radionuclide**	**Class**	**Table I Occupational Values**			**Table II Effluent Concentrations**		**Table III Releases to Sewers**
			Col. 1	**Col. 2**	**Col. 3**	**Col. 1**	**Col. 2**	**Monthly Average Concen-tration (µCi/ml)**
			Oral Ingestion ALI (µCi)	**Inhalation ALI (µCi)**	**Inhalation DAC (µCi/ml)**	**Air (µCi/ml)**	**Water (µCi/ml)**	
34	Selenium-81m[2]	D, see ^{70}Se	4E+4	7E+4	3E-5	9E-8	3E-4	3E-3
		W, see ^{70}Se	2E+4	7E+4	3E-5	1E-7	-	-
34	Selenium-81[2]	D, see ^{70}Se	6E+4	2E+5	9E-5	3E-7	-	-
			St wall (8E+4)	-	-	-	1E-3	1E-2
		W, see ^{70}Se	-	2E+5	1E-4	3E-7	-	-
34	Selenium-83[2]	D, see ^{70}Se	4E+4	1E+5	5E-5	2E-7	4E-4	4E-3
		W, see ^{70}Se	3E+4	1E+5	5E-5	2E-7	-	-
35	Bromine-74m[2]	D, bromides of H, Li, Na, K, Rb, Cs, and Fr	1E+4	4E+4	2E-5	5E-8	-	-
			St wall (2E+4)	-	-	-	3E-4	3E-3
		W, bromides of lanthanides, Be, Mg, Ca, Sr, Ba, Ra, Al, Ga, In, Tl, Ge, Sn, Pb, As, Sb, Bi, Fe, Ru, Os, Co, Rh, Ir, Ni, Pd, Pt, Cu, Ag, Au, Zn, Cd, Hg, Sc, Y, Ti, Zr, Hf, V, Nb, Ta, Mn, Tc, and Re	-	4E+4	2E-5	6E-8	-	-
35	Bromine-74[2]	D, see ^{74m}Br	2E+4	7E+4	3E-5	1E-7	-	-
			St wall (4E+4)	-	-	-	5E-4	5E-3
		W, see ^{74m}Br	-	8E+4	4E-5	1E-7	-	-
35	Bromine-75[2]	D, see ^{74m}Br	3E+4	5E+4	2E-5	7E-8	-	-
			St wall (4E+4)	-	-	-	5E-4	5E-3
		W, see ^{74m}Br	-	5E+4	2E-5	7E-8	-	-
35	Bromine-76	D, see ^{74m}Br	4E+3	5E+3	2E-6	7E-9	5E-5	5E-4
		W, see ^{74m}Br	-	4E+3	2E-6	6E-9	-	-
35	Bromine-77	D, see ^{74m}Br	2E+4	2E+4	1E-5	3E-8	2E-4	2E-3
		W, see ^{74m}Br	-	2E+4	8E-6	3E-8	-	-
35	Bromine-80m	D, see ^{74m}Br	2E+4	2E+4	7E-6	2E-8	3E-4	3E-3
		W, see ^{74m}Br	-	1E+4	6E-6	2E-8	-	-
35	Bromine-80[2]	D, see ^{74m}Br	5E+4	2E+5	8E-5	3E-7	-	-
			St wall (9E+4)	-	-	-	1E-3	1E-2
		W, see ^{74m}Br	-	2E+5	9E-5	3E-7	-	-
35	Bromine-82	D, see ^{74m}Br	3E+3	4E+3	2E-6	6E-9	4E-5	4E-4
		W, see ^{74m}Br	-	4E+3	2E-6	5E-9	-	-
35	Bromine-83	D, see ^{74m}Br	5E+4	6E+4	3E-5	9E-8	-	-
			St wall (7E+4)	-	-	-	9E-4	9E-3
		W, see ^{74m}Br	-	6E+4	3E-5	9E-8	-	-
35	Bromine-84[2]	D, see ^{74m}Br	2E+4	6E+4	2E-5	8E-8	-	-
			St wall (3E+4)	-	-	-	4E-4	4E-3
		W, see ^{74m}Br	-	6E+4	3E-5	9E-8	-	-
36	Krypton-74[2]	Submersion[1]	-	-	3E-6	1E-8	-	-
36	Krypton-76	Submersion[1]	-	-	9E-6	4E-8	-	-
36	Krypton-77[2]	Submersion[1]	-	-	4E-6	2E-8	-	-
36	Krypton-79	Submersion[1]	-	-	2E-5	7E-8	-	-
36	Krypton-81	Submersion[1]	-	-	7E-4	3E-6	-	-
36	Krypton-83m[2]	Submersion[1]	-	-	1E-2	5E-5	-	-
36	Krypton-85m	Submersion[1]	-	-	2E-5	1E-7	-	-
36	Krypton-85	Submersion[1]	-	-	1E-4	7E-7	-	-
36	Krypton-87[2]	Submersion[1]	-	-	5E-6	2E-8	-	-
36	Krypton-88	Submersion[1]	-	-	2E-6	9E-9	-	-
37	Rubidium-79[2]	D, all compounds	4E+4	1E+5	5E-5	2E-7	-	-
			St wall (6E+4)	-	-	-	8E-4	8E-3

Tables I, II, and III								
Atomic No.	**Radionuclide**	**Class**	**Table I Occupational Values**			**Table II Effluent Concentrations**		**Table III Releases to Sewers**
			Col. 1	**Col. 2**	**Col. 3**	**Col. 1**	**Col. 2**	**Monthly Average Concen-tration (µCi/ml)**
			Oral Ingestion ALI (µCi)	**Inhalation**		**Air (µCi/ml)**	**Water (µCi/ml)**	
				ALI (µCi)	**DAC (µCi/ml)**			
37	Rubidium-81m[2]	D, all compounds	2E+5	3E+5	1E-4	5E-7	-	-
			St wall (3E+5)	-	-	-	4E-3	4E-2
37	Rubidium-81	D, all compounds	4E+4	5E+4	2E-5	7E-8	5E-4	5E-3
37	Rubidium-82m	D, all compounds	1E+4	2E+4	7E-6	2E-8	2E-4	2E-3
37	Rubidium-83	D, all compounds	6E+2	1E+3	4E-7	1E-9	9E-6	9E-5
37	Rubidium-84	D, all compounds	5E+2	8E+2	3E-7	1E-9	7E-6	7E-5
37	Rubidium-86	D, all compounds	5E+2	8E+2	3E-7	1E-9	7E-6	7E-5
37	Rubidium-87	D, all compounds	1E+3	2E+3	6E-7	2E-9	1E-5	1E-4
37	Rubidium-88[2]	D, all compounds	2E+4	6E+4	3E-5	9E-8	-	-
			St wall (3E+4)	-	-	-	4E-4	4E-3
37	Rubidium-89[2]	D, all compounds	4E+4	1E+5	6E-5	2E-7	-	-
			St wall (6E+4)	-	-	-	9E-4	9E-3
38	Strontium-80[2]	D, all soluble compounds except $SrTiO_3$	4E+3	1E+4	5E-6	2E-8	6E-5	6E-4
		Y, all insoluble com-pounds and $SrTi0_3$	-	1E+4	5E-6	2E-8	-	-
38	Strontium-81[2]	D, see ^{80}Sr	3E+4	8E+4	3E-5	1E-7	3E-4	3E-3
		Y, see ^{80}Sr	2E+4	8E+4	3E-5	1E-7	-	-
38	Strontium-82	D, see ^{80}Sr	3E+2	4E+2	2E-7	6E-10	-	-
			LLI wall (2E+2)	-	-	-	3E-6	3E-5
		Y, see ^{80}Sr	2E+2	9E+1	4E-8	1E-10	-	-
38	Strontium-83	D, see ^{80}Sr	3E+3	7E+3	3E-6	1E-8	3E-5	3E-4
		Y, see ^{80}Sr	2E+3	4E+3	1E-6	5E-9	-	-
38	Strontium-85m[2]	D, see ^{80}Sr	2E+5	6E+5	3E-4	9E-7	3E-3	3E-2
		Y, see ^{80}Sr	-	8E+5	4E-4	1E-6	-	-
38	Strontium-85	D, see ^{80}Sr	3E+3	3E+3	1E-6	4E-9	4E-5	4E-4
		Y, see ^{80}Sr	-	2E+3	6E-7	2E-9	-	-
38	Strontium-87m	D, see ^{80}Sr	5E+4	1E+5	5E-5	2E-7	6E-4	6E-3
		Y, see ^{80}Sr	4E+4	2E+5	6E-5	2E-7	-	-
38	Strontium-89	D, see ^{80}Sr	6E+2	8E+2	4E-7	1E-9	-	-
			LLI wall (6E+2)	-	-	-	8E-6	8E-5
		Y, see ^{80}Sr	5E+2	1E+2	6E-8	2E-10	-	-
38	Strontium-90	D, see ^{80}Sr	3E+1	2E+1	8E-9	-	-	-
			Bone surf (4E+1)	Bone surf (2E+1)	-	3E-11	5E-7	5E-6
		Y, see ^{80}Sr	-	4E+0	2E-9	6E-12	-	-
38	Strontium-91	D, see ^{80}Sr	2E+3	6E+3	2E-6	8E-9	2E-5	2E-4
		Y, see ^{80}Sr	-	4E+3	1E-6	5E-9	-	-
38	Strontium-92	D, see ^{80}Sr	3E+3	9E+3	4E-6	1E-8	4E-5	4E-4
		Y, see ^{80}Sr	-	7E+3	3E-6	9E-9	-	-
39	Yttrium-86m[2]	W, all compounds except those given for Y	2E+4	6E+4	2E-5	8E-8	3E-4	3E-3
		Y, oxides and hydroxides	-	5E+4	2E-5	8E-8	-	-
39	Yttrium-86	W, see ^{86m}Y	1E+3	3E+3	1E-6	5E-9	2E-5	2E-4
		Y, see ^{86m}Y	-	3E+3	1E-6	5E-9	-	-
39	Yttrium-87	W, see ^{86m}Y	2E+3	3E+3	1E-6	5E-9	3E-5	3E-4
		Y, see ^{86m}Y	-	3E+3	1E-6	5E-9	-	-
39	Yttrium-88	W, see ^{86m}Y	1E+3	3E+2	1E-7	3E-10	1E-5	1E-4
		Y, see ^{86m}Y	-	2E+2	1E-7	3E-10	-	-
39	Yttrium-90m	W, see ^{86m}Y	8E+3	1E+4	5E-6	2E-8	1E-4	1E-3
		Y, see ^{86m}Y	-	1E+4	5E-6	2E-8	-	-

Tables I, II, and III								
Atomic No.	Radionuclide	Class	Table I Occupational Values			Table II Effluent Concentrations		Table III Releases to Sewers
			Col. 1	Col. 2	Col. 3	Col. 1	Col. 2	Monthly Average Concen-tration (µCi/ml)
			Oral Ingestion ALI (µCi)	Inhalation ALI (µCi)	Inhalation DAC (µCi/ml)	Air (µCi/ml)	Water (µCi/ml)	
39	Yttrium-90	W, see ^{86m}Y	4E+2	7E+2	3E-7	9E-10	-	-
			LLI wall (5E+2)	-	-	-	7E-6	7E-5
		Y, see ^{86m}Y	-	6E+2	3E-7	9E-10	-	-
39	Yttrium-91m[2]	W, see ^{86m}Y	1E+5	2E+5	1E-4	3E-7	2E-3	2E-2
		Y, see ^{86m}Y	-	2E+5	7E-5	2E-7	-	-
39	Yttrium-91	W, see ^{86m}Y	5E+2	2E+2	7E-8	2E-10	-	-
			LLI wall (6E+2)	-	-	-	8E-6	8E-5
		Y, see ^{86m}Y	-	1E+2	5E-8	2E-10	-	-
39	Yttrium-92	W, see ^{86m}Y	3E+3	9E+3	4E-6	1E-8	4E-5	4E-4
		Y, see ^{86m}Y	-	8E+3	3E-6	1E-8	-	-
39	Yttrium-93	W, see ^{86m}Y	1E+3	3E+3	1E-6	4E-9	2E-5	2E-4
		Y, see ^{86m}Y	-	2E+3	1E-6	3E-9	-	-
39	Yttrium-94[2]	W, see ^{86m}Y	2E+4	8E+4	3E-5	1E-7	-	-
			St wall (3E+4)	-	-	-	4E-4	4E-3
		Y, see ^{86m}Y	-	8E+4	3E-5	1E-7	-	-
39	Yttrium-95[2]	W, see ^{86m}Y	4E+4	2E+5	6E-5	2E-7	-	-
			St wall (5E+4)	-	-	-	7E-4	7E-3
		Y, see ^{86m}Y	-	1E+5	6E-5	2E-7	-	-
40	Zirconium-86	D, all compounds except those given for W and Y	1E+3	4E+3	2E-6	6E-9	2E-5	2E-4
		W, oxides, hydroxides, halides, and nitrates	-	3E+3	1E-6	4E-9	-	-
		Y, carbide	-	2E+3	1E-6	3E-9	-	-
40	Zirconium-88	D, see ^{86}Zr	4E+3	2E+2	9E-8	3E-10	5E-5	5E-4
		W, see ^{86}Zr	-	5E+2	2E-7	7E-10	-	-
		Y, see ^{86}Zr	-	3E+2	1E-7	4E-10	-	-
40	Zirconium-89	D, see ^{86}Zr	2E+3	4E+3	1E-6	5E-9	2E-5	2E-4
		W, see ^{86}Zr	-	2E+3	1E-6	3E-9	-	-
		Y, see ^{86}Zr	-	2E+3	1E-6	3E-9	-	-
40	Zirconium-93	D, see ^{86}Zr	1E+3	6E+0	3E-9	-	-	-
			Bone surf (3E+3)	Bone surf (2E+1)	-	2E-11	4E-5	4E-4
		W, see ^{86}Zr	-	2E+1	1E-8	-	-	-
			-	Bone surf (6E+1)	-	9E-11	-	-
		Y, see ^{86}Zr	-	6E+1	2E-8	-	-	-
			-	Bone surf (7E+1)	-	9E-11	-	-
40	Zirconium-95	D, see ^{86}Zr	1E+3	1E+2	5E-8	-	2E-5	2E-4
			-	Bone surf (3E+2)	-	4E-10	-	-
		W, see ^{86}Zr	-	4E+2	2E-7	5E-10	-	-
		Y, see ^{86}Zr	-	3E+2	1E-7	4E-10	-	-
40	Zirconium-97	D, see ^{86}Zr	6E+2	2E+3	8E-7	3E-9	9E-6	9E-5
		W, see ^{86}Zr	-	1E+3	6E-7	2E-9	-	-
		Y, see ^{86}Zr	-	1E+3	5E-7	2E-9	-	-
41	Niobium-88[2]	W, all compounds except those given for Y	5E+4	2E+5	9E-5	3E-7	-	-
			St wall (7E+4)	-	-	-	1E-3	1E-2
		Y, oxides and hydroxides	-	2E+5	9E-5	3E-7	-	-
41	Niobium-89[2] (66 min)	W, see ^{88}Nb	1E+4	4E+4	2E-5	6E-8	1E-4	1E-3
		Y, see ^{88}Nb	-	4E+4	2E-5	5E-8	-	-
41	Niobium-89 (122 min)	W, see ^{88}Nb	5E+3	2E+4	8E-6	3E-8	7E-5	7E-4
		Y, see ^{88}Nb	-	2E+4	6E-6	2E-8	-	-

Tables I, II, and III								
Atomic No.	**Radionuclide**	**Class**	**Table I Occupational Values**			**Table II Effluent Concentrations**		**Table III Releases to Sewers**
			Col. 1	**Col. 2**	**Col. 3**	**Col. 1**	**Col. 2**	**Monthly Average Concen-tration (µCi/ml)**
			Oral Ingestion ALI (µCi)	**Inhalation**		**Air (µCi/ml)**	**Water (µCi/ml)**	
				ALI (µCi)	**DAC (µCi/ml)**			
41	Niobium-90	W, see ^{88}Nb	1E+3	3E+3	1E-6	4E-9	1E-5	1E-4
		Y, see ^{88}Nb	-	2E+3	1E-6	3E-9	-	-
41	Niobium-93m	W, see ^{88}Nb	9E+3	2E+3	8E-7	3E-9	-	-
			LLI wall (1E+4)	-	-	-	2E-4	2E-3
		Y, see ^{88}Nb	-	2E+2	7E-8	2E-10	-	-
41	Niobium-94	W, see ^{88}Nb	9E+2	2E+2	8E-8	3E-10	1E-5	1E-4
		Y, see ^{88}Nb	-	2E+1	6E-9	2E-11	-	-
41	Niobium-95m	W, see ^{88}Nb	2E+3	3E+3	1E-6	4E-9	-	-
			LLI wall (2E+3)	-	-	-	3E-5	3E-4
		Y, see ^{88}Nb	-	2E+3	9E-7	3E-9	-	-
41	Niobium-95	W, see ^{88}Nb	2E+3	1E+3	5E-7	2E-9	3E-5	3E-4
		Y, see ^{88}Nb	-	1E+3	5E-7	2E-9	-	-
41	Niobium-96	W, see ^{88}Nb	1E+3	3E+3	1E-6	4E-9	2E-5	2E-4
		Y, see ^{88}Nb	-	2E+3	1E-6	3E-9	-	-
41	Niobium-97[2]	W, see ^{88}Nb	2E+4	8E+4	3E-5	1E-7	3E-4	3E-3
		Y, see ^{88}Nb	-	7E+4	3E-5	1E-7	-	-
41	Niobium-98[2]	W, see ^{88}Nb	1E+4	5E+4	2E-5	8E-8	2E-4	2E-3
		Y, see ^{88}Nb	-	5E+4	2E-5	7E-8	-	-
42	Molybdenum-90	D, all compounds except those given for Y	4E+3	7E+3	3E-6	1E-8	3E-5	3E-4
		Y, oxides, hydroxide, and MoS_2	2E+3	5E+3	2E-6	6E-9	-	-
42	Molybdenum-93m	D, see ^{90}Mo	9E+3	2E+4	7E-6	2E-8	6E-5	6E-4
		Y, see ^{90}Mo	4E+3	1E+4	6E-6	2E-8	-	-
42	Molybdenum-93	D, see ^{90}Mo	4E+3	5E+3	2E-6	8E-9	5E-5	5E-4
		Y, see ^{90}Mo	2E+4	2E+2	8E-8	2E-10	-	-
42	Molybdenum-99	D, see ^{90}Mo	2E+3	3E+3	1E-6	4E-9	-	-
			LLI wall (1E+3)	-	-	-	2E-5	2E-4
		Y, see ^{90}Mo	1E+3	1E+3	6E-7	2E-9	-	-
42	Molybdenum-101[2]	D, see ^{90}Mo	4E+4	1E+5	6E-5	2E-7	-	-
			St wall (5E+4)	-	-	-	7E-4	7E-3
		Y, see ^{90}Mo	-	1E+5	6E-5	2E-7	-	-
43	Technetium-93m[2]	D, all compounds except those given for W	7E+4	2E+5	6E-5	2E-7	1E-3	1E-2
		W, oxides, hydroxides, halides, and nitrates	-	3E+5	1E-4	4E-7	-	-
43	Technetium-93	D, see ^{93m}Tc	3E+4	7E+4	3E-5	1E-7	4E-4	4E-3
		W, see ^{93m}Tc	-	1E+5	4E-5	1E-7	-	-
43	Technetium-94m[2]	D, see ^{93m}Tc	2E+4	4E+4	2E-5	6E-8	3E-4	3E-3
		W, see ^{93m}Tc	-	6E+4	2E-5	8E-8	-	-
43	Technetium-94	D, see ^{93m}Tc	9E+3	2E+4	8E-6	3E-8	1E-4	1E-3
		W, see ^{93m}Tc	-	2E+4	1E-5	3E-8	-	-
43	Technetium-95m	D, see ^{93m}Tc	4E+3	5E+3	2E-6	8E-9	5E-5	5E-4
		W, see ^{93m}Tc	-	2E+3	8E-7	3E-9	-	-
43	Technetium-95	D, see ^{93m}Tc	1E+4	2E+4	9E-6	3E-8	1E-4	1E-3
		W, see ^{93m}Tc	-	2E+4	8E-6	3E-8	-	-
43	Technetium-96m[2]	D, see ^{93m}Tc	2E+5	3E+5	1E-4	4E-7	2E-3	2E-2
		W, see ^{93m}Tc	-	2E+5	1E-4	3E-7	-	-
43	Technetium-96	D, see ^{93m}Tc	2E+3	3E+3	1E-6	5E-9	3E-5	3E-4
		W, see ^{93m}Tc	-	2E+3	9E-7	3E-9	-	-
43	Technetium-97m	D, see ^{93m}Tc	5E+3	7E+3	3E-6	-	6E-5	6E-4
			-	St Wall (7E + 3)	-	1E-8	-	-
		W, see ^{93m}Tc	-	1E+3	5E-7	2E-9	-	-

Tables I, II, and III								
Atomic No.	Radionuclide	Class	Table I Occupational Values			Table II Effluent Concentrations		Table III Releases to Sewers
			Col. 1	Col. 2	Col. 3	Col. 1	Col. 2	Monthly Average Concen-tration (µCi/ml)
			Oral Ingestion ALI (µCi)	Inhalation ALI (µCi)	Inhalation DAC (µCi/ml)	Air (µCi/ml)	Water (µCi/ml)	
43	Technetium-97	D, see ^{93m}Tc	4E+4	5E+4	2E-5	7E-8	5E-4	5E-3
		W, see ^{93m}Tc	-	6E+3	2E-6	8E-9	-	-
43	Technetium-98	D, see ^{93m}Tc	1E+3	2E+3	7E-7	2E-9	1E-5	1E-4
		W, see ^{93m}Tc	-	3E+2	1E-7	4E-10	-	-
43	Technetium-99m	D, see ^{93m}Tc	8E+4	2E+5	6E-5	2E-7	1E-3	1E-2
		W, see ^{93m}Tc	-	2E+5	1E-4	3E-7	-	-
43	Technetium-99	D, see ^{93m}Tc	4E+3	5E+3	2E-6	-	6E-5	6E-4
			-	St wall (6E+3)	-	8E-9	-	-
		W, see ^{93m}Tc	-	7E+2	3E-7	9E-10	-	-
43	Technetium-101[2]	D, see ^{93m}Tc	9E+4	3E+5	1E-4	5E-7	-	-
			St wall (1E+5)	-	-	-	2E-3	2E-2
		W, see ^{93m}Tc	-	4E+5	2E-4	5E-7	-	-
43	Technetium-104[2]	D, see ^{93m}Tc	2E+4	7E+4	3E-5	1E-7	-	-
			St wall (3E+4)	-	-	-	4E-4	4E-3
		W, see ^{93m}Tc	-	9E+4	4E-5	1E-7	-	-
44	Ruthenium-94[2]	D, all compounds except those given for W and Y	2E+4	4E+4	2E-5	6E-8	2E-4	2E-3
		W, halides	-	6E+4	3E-5	9E-8	-	-
		Y, oxides and hydroxides	-	6E+4	2E-5	8E-8	-	-
44	Ruthenium-97	D, see ^{94}Ru	8E+3	2E+4	8E-6	3E-8	1E-4	1E-3
		W, see ^{94}Ru	-	1E+4	5E-6	2E-8	-	-
		Y, see ^{94}Ru	-	1E+4	5E-6	2E-8	-	-
44	Ruthenium-103	D, see ^{94}Ru	2E+3	2E+3	7E-7	2E-9	3E-5	3E-4
		W, see ^{94}Ru	-	1E+3	4E-7	1E-9	-	-
		Y, see ^{94}Ru	-	6E+2	3E-7	9E-10	-	-
44	Ruthenium-105	D, see ^{94}Ru	5E+3	1E+4	6E-6	2E-8	7E-5	7E-4
		W, see ^{94}Ru	-	1E+4	6E-6	2E-8	-	-
		Y, see ^{94}Ru	-	1E+4	5E-6	2E-8	-	-
44	Ruthenium-106	D, see ^{94}Ru	2E+2	9E+1	4E-8	1E-10	-	-
			LLI wall (2E+2)	-	-	-	3E-6	3E-5
		W, see ^{94}Ru	-	5E+1	2E-8	8E-11	-	-
		Y, see ^{94}Ru	-	1E+1	5E-9	2E-11	-	-
45	Rhodium-99m	D, all compounds except those given for W and Y	2E+4	6E+4	2E-5	8E-8	2E-4	2E-3
		W, halides	-	8E+4	3E-5	1E-7	-	-
		Y, oxides and hydroxides	-	7E+4	3E-5	9E-8	-	-
45	Rhodium-99	D, see ^{99m}Rh	2E+3	3E+3	1E-6	4E-9	3E-5	3E-4
		W, see ^{99m}Rh	-	2E+3	9E-7	3E-9	-	-
		Y, see ^{99m}Rh	-	2E+3	8E-7	3E-9	-	-
45	Rhodium-100	D, see ^{99m}Rh	2E+3	5E+3	2E-6	7E-9	2E-5	2E-4
		W, see ^{99m}Rh	-	4E+3	2E-6	6E-9	-	-
		Y, see ^{99m}Rh	-	4E+3	2E-6	5E-9	-	-
45	Rhodium-101m	D, see ^{99m}Rh	6E+3	1E+4	5E-6	2E-8	8E-5	8E-4
		W, see ^{99m}Rh	-	8E+3	4E-6	1E-8	-	-
		Y, see ^{99m}Rh	-	8E+3	3E-6	1E-8	-	-
45	Rhodium-101	D, see ^{99m}Rh	2E+3	5E+2	2E-7	7E-10	3E-5	3E-4
		W, see ^{99m}Rh	-	8E+2	3E-7	1E-9	-	-
		Y, see ^{99m}Rh	-	2E+2	6E-8	2E-10	-	-
45	Rhodium-102m	D, see ^{99m}Rh	1E+3	5E+2	2E-7	7E-10	-	-
			LLI wall (1E+3)	-	-	-	2E-5	2E-4
		W, see ^{99m}Rh	-	4E+2	2E-7	5E-10	-	-
		Y, see ^{99m}Rh	-	1E+2	5E-8	2E-10	-	-

Tables I, II, and III								
Atomic No.	**Radionuclide**	**Class**	**Table I Occupational Values**			**Table II Effluent Concentrations**		**Table III Releases to Sewers**
			Col. 1	**Col. 2**	**Col. 3**	**Col. 1**	**Col. 2**	**Monthly Average Concen-tration (µCi/ml)**
			Oral Ingestion ALI (µCi)	**Inhalation**		**Air (µCi/ml)**	**Water (µCi/ml)**	
				ALI (µCi)	**DAC (µCi/ml)**			
45	Rhodium-102	D, see ^{99m}Rh	6E+2	9E+1	4E-8	1E-10	8E-6	8E-5
		W, see ^{99m}Rh	-	2E+2	7E-8	2E-10	-	-
		Y, see ^{99m}Rh	-	6E+1	2E-8	8E-11	-	-
45	Rhodium-103m[2]	D, see ^{99m}Rh	4E+5	1E+6	5E-4	2E-6	6E-3	6E-2
		W, see ^{99m}Rh	-	1E+6	5E-4	2E-6	-	-
		Y, see ^{99m}Rh	-	1E+6	5E-4	2E-6	-	-
45	Rhodium-105	D, see ^{99m}Rh	4E+3	1E+4	5E-6	2E-8	-	-
			LLI wall (4E+3)	-	-	-	5E-5	5E-4
		W, see ^{99m}Rh	-	6E+3	3E-6	9E-9	-	-
		Y, see ^{99m}Rh	-	6E+3	2E-6	8E-9	-	-
45	Rhodium-106m	D, see ^{99m}Rh	8E+3	3E+4	1E-5	4E-8	1E-4	1E-3
		W, see ^{99m}Rh	-	4E+4	2E-5	5E-8	-	-
		Y, see ^{99m}Rh	-	4E+4	1E-5	5E-8	-	-
45	Rhodium-107[2]	D, see ^{99m}Rh	7E+4	2E+5	1E-4	3E-7	-	-
			St wall (9E+4)	-	-	-	1E-3	1E-2
		W, see ^{99m}Rh	-	3E+5	1E-4	4E-7	-	-
		Y, see ^{99m}Rh	-	3E+5	1E-4	3E-7	-	-
46	Palladium-100	D, all compounds except those given for W and Y	1E+3	1E+3	6E-7	2E-9	2E-5	2E-4
		W, nitrates	-	1E+3	5E-7	2E-9	-	-
		Y, oxides and hydroxides	-	1E+3	6E-7	2E-9	-	-
46	Palladium-101	D, see ^{100}Pd	1E+4	3E+4	1E-5	5E-8	2E-4	2E-3
		W, see ^{100}Pd	-	3E+4	1E-5	5E-8	-	-
		Y, see ^{100}Pd	-	3E+4	1E-5	4E-8	-	-
46	Palladium-103	D, see ^{100}Pd	6E+3	6E+3	3E-6	9E-9	-	-
			LLI wall (7E+3)	-	-	-	1E-4	1E-3
		W, see ^{100}Pd	-	4E+3	2E-6	6E-9	-	-
		Y, see ^{100}Pd	-	4E+3	1E-6	5E-9	-	-
46	Palladium-107	D, see ^{100}Pd	3E+4	2E+4	9E-6	-	-	-
			LLI wall (4E+4)	Kidneys (2E+4)	-	3E-8	5E-4	5E-3
		W, see ^{100}Pd	-	7E+3	3E-6	1E-8	-	-
		Y, see ^{100}Pd	-	4E+2	2E-7	6E-10	-	-
46	Palladium-109	D, see ^{100}Pd	2E+3	6E+3	3E-6	9E-9	3E-5	3E-4
		W, see ^{100}Pd	-	5E+3	2E-6	8E-9	-	-
		Y, see ^{100}Pd	-	5E+3	2E-6	6E-9	-	-
47	Silver-102[2]	D, all compounds except those given for W and Y	5E+4	2E+5	8E-5	2E-7	-	-
			St wall (6E+4)	-	-	-	9E-4	9E-3
		W, nitrates and sulfides	-	2E+5	9E-5	3E-7	-	-
		Y, oxides and hydroxides	-	2E+5	8E-5	3E-7	-	-
47	Silver-103[2]	D, see ^{102}Ag	4E+4	1E+5	4E-5	1E-7	5E-4	5E-3
		W, see ^{102}Ag	-	1E+5	5E-5	2E-7	-	-
		Y, see ^{102}Ag	-	1E+5	5E-5	2E-7	-	-
47	Silver-104m[2]	D, see ^{102}Ag	3E+4	9E+4	4E-5	1E-7	4E-4	4E-3
		W, see ^{102}Ag	-	1E+5	5E-5	2E-7	-	-
		Y, see ^{102}Ag	-	1E+5	5E-5	2E-7	-	-
47	Silver-104[2]	D, see ^{102}Ag	2E+4	7E+4	3E-5	1E-7	3E-4	3E-3
		W, see ^{102}Ag	-	1E+5	6E-5	2E-7	-	-
		Y, see ^{102}Ag	-	1E+5	6E-5	2E-7	-	-
47	Silver-105	D, see ^{102}Ag	3E+3	1E+3	4E-7	1E-9	4E-5	4E-4
		W, see ^{102}Ag	-	2E+3	7E-7	2E-9	-	-
		Y, see ^{102}Ag	-	2E+3	7E-7	2E-9	-	-

Tables I, II, and III								
Atomic No.	**Radionuclide**	**Class**	**Table I Occupational Values**			**Table II Effluent Concentrations**		**Table III Releases to Sewers**
			Col. 1	**Col. 2**	**Col. 3**	**Col. 1**	**Col. 2**	**Monthly Average Concen-tration (µCi/ml)**
			Oral Ingestion ALI (µCi)	**Inhalation**		**Air (µCi/ml)**	**Water (µCi/ml)**	
				ALI (µCi)	**DAC (µCi/ml)**			
47	Silver-106m	D, see ^{102}Ag	8E+2	7E+2	3E-7	1E-9	1E-5	1E-4
		W, see ^{102}Ag	-	9E+2	4E-7	1E-9	-	-
		Y, see ^{102}Ag	-	9E+2	4E-7	1E-9	-	-
47	Silver-106[2]	D, see ^{102}Ag	6E+4	2E+5	8E-5	3E-7	-	-
			St. wall (6E+4)	-	-	-	9E-4	9E-3
		W, see ^{102}Ag	-	2E+5	9E-5	3E-7	-	-
		Y, see ^{102}Ag	-	2E+5	8E-5	3E-7	-	-
47	Silver-108m	D, see ^{102}Ag	6E+2	2E+2	8E-8	3E-10	9E-6	9E-5
		W, see ^{102}Ag	-	3E+2	1E-7	4E-10	-	-
		Y, see ^{102}Ag	-	2E+1	1E-8	3E-11	-	-
47	Silver-110m	D, see ^{102}Ag	5E+2	1E+2	5E-8	2E-10	6E-6	6E-5
		W, see ^{102}Ag	-	2E+2	8E-8	3E-10	-	-
		Y, see ^{102}Ag	-	9E+1	4E-8	1E-10	-	-
47	Silver-111	D, see ^{102}Ag	9E+2	2E+3	6E-7	-	-	-
			LLI wall (1E+3)	Liver (2E+3)	-	2E-9	2E-5	2E-4
		W, see ^{102}Ag	-	9E+2	4E-7	1E-9	-	-
		Y, see ^{102}Ag	-	9E+2	4E-7	1E-9	-	-
47	Silver-112	D, see ^{102}Ag	3E+3	8E+3	3E-6	1E-8	4E-5	4E-4
		W, see ^{102}Ag	-	1E+4	4E-6	1E-8	-	-
		Y, see ^{102}Ag	-	9E+3	4E-6	1E-8	-	-
47	Silver-115[2]	D, see ^{102}Ag	3E+4	9E+4	4E-5	1E-7	-	-
			St wall (3E+4)	-	-	-	4E-4	4E-3
		W, see ^{102}Ag	-	9E+4	4E-5	1E-7	-	-
		Y, see ^{102}Ag	-	8E+4	3E-5	1E-7	-	-
48	Cadmium-104[2]	D, all compounds except those given for W and Y	2E+4	7E+4	3E-5	9E-8	3E-4	3E-3
		W, sulfides, halides, and nitrates	-	1E+5	5E-5	2E-7	-	-
		Y, oxides and hydroxides	-	1E+5	5E-5	2E-7	-	-
48	Cadmium-107	D, see ^{104}Cd	2E+4	5E+4	2E-5	8E-8	3E-4	3E-3
		W, see ^{104}Cd	-	6E+4	2E-5	8E-8	-	-
		Y, see ^{104}Cd	-	5E+4	2E-5	7E-8	-	-
48	Cadmium-109	D, see ^{104}Cd	3E+2	4E+1	1E-8	-	-	-
			Kidneys (4E+2)	Kidneys (5E+1)	-	7E-11	6E-6	6E-5
		W, see ^{104}Cd	-	1E+2	5E-8	-	-	-
			-	Kidneys (1E+2)	-	2E-10	-	-
		Y, see ^{104}Cd	-	1E+2	5E-8	2E-10	-	-
48	Cadmium-113m	D, see ^{104}Cd	2E+1	2E+0	1E-9	-	-	-
			Kidneys (4E+1)	Kidneys (4E+0)	-	5E-12	5E-7	5E-6
		W, see ^{104}Cd	-	8E+0	4E-9	-	-	-
			-	Kidneys (1E+1)	-	2E-11	-	-
		Y, see ^{104}Cd	-	1E+1	5E-9	2E-11	-	-
48	Cadmium-113	D, see ^{104}Cd	2E+1	2E+0	9E-10	-	-	-
			Kidneys (3E+1)	Kidneys (3E+0)	-	5E-12	4E-7	4E-6
		W, see ^{104}Cd	-	8E+0	3E-9	-	-	-
			-	Kidneys (1E+1)	-	2E-11	-	-
		Y, see ^{104}Cd	-	1E+1	6E-9	2E-11	-	-

Tables I, II, and III								
Atomic No.	**Radionuclide**	**Class**	**Table I Occupational Values**			**Table II Effluent Concentrations**		**Table III Releases to Sewers**
			Col. 1	**Col. 2**	**Col. 3**	**Col. 1**	**Col. 2**	**Monthly Average Concen-tration (µCi/ml)**
			Oral Ingestion ALI (µCi)	**Inhalation**		**Air (µCi/ml)**	**Water (µCi/ml)**	
				ALI (µCi)	**DAC (µCi/ml)**			
48	Cadmium-115m	D, see ^{104}Cd	3E+2	5E+1	2E-8	-	4E-6	4E-5
			-	Kidneys (8E+1)	-	1E-10	-	-
		W, see ^{104}Cd	-	1E+2	5E-8	2E-10	-	-
		Y, see ^{104}Cd	-	1E+2	6E-8	2E-10	-	-
48	Cadmium-115	D, see ^{104}Cd	9E+2	1E+3	6E-7	2E-9	-	-
			LLI wall (1E+3)	-	-	-	1E-5	1E-4
		W, see ^{104}Cd	-	1E+3	5E-7	2E-9	-	-
		Y, see ^{104}Cd	-	1E+3	6E-7	2E-9	-	-
48	Cadmium-117m	D, see ^{104}Cd	5E+3	1E+4	5E-6	2E-8	6E-5	6E-4
		W, see ^{104}Cd	-	2E+4	7E-6	2E-8	-	-
		Y, see ^{104}Cd	-	1E+4	6E-6	2E-8	-	-
48	Cadmium-117	D, see ^{104}Cd	5E+3	1E+4	5E-6	2E-8	6E-5	6E-4
		W, see ^{104}Cd	-	2E+4	7E-6	2E-8	-	-
		Y, see ^{104}Cd	-	1E+4	6E-6	2E-8	-	-
49	Indium-109	D, all compounds except those given for W	2E+4	4E+4	2E-5	6E-8	3E-4	3E-3
		W, oxides, hydroxides, halides, and nitrates	-	6E+4	3E-5	9E-8	-	-
49	Indium-110[2] (69.1 min)	D, see ^{109}In	2E+4	4E+4	2E-5	6E-8	2E-4	2E-3
		W, see ^{109}In	-	6E+4	2E-5	8E-8	-	-
49	Indium-110 (4.9 h)	D, see ^{109}In	5E+3	2E+4	7E-6	2E-8	7E-5	7E-4
		W, see ^{109}In	-	2E+4	8E-6	3E-8	-	-
49	Indium-111	D, see ^{109}In	4E+3	6E+3	3E-6	9E-9	6E-5	6E-4
		W, see ^{109}In	-	6E+3	3E-6	9E-9	-	-
49	Indium-112[2]	D, see ^{109}In	2E+5	6E+5	3E-4	9E-7	2E-3	2E-2
		W, see ^{109}In	-	7E+5	3E-4	1E-6	-	-
49	Indium-113m[2]	D, see ^{109}In	5E+4	1E+5	6E-5	2E-7	7E-4	7E-3
		W, see ^{109}In	-	2E+5	8E-5	3E-7	-	-
49	Indium-114m	D, see ^{109}In	3E+2	6E+1	3E-8	9E-11	-	-
			LLI wall (4E+2)	-	-	-	5E-6	5E-5
		W, see ^{109}In	-	1E+2	4E-8	1E-10	-	-
49	Indium-115m	D, see ^{109}In	1E+4	4E+4	2E-5	6E-8	2E-4	2E-3
		W, see ^{109}In	-	5E+4	2E-5	7E-8	-	-
49	Indium-115	D, see ^{109}In	4E+1	1E+0	6E-10	2E-12	5E-7	5E-6
		W, see ^{109}In	-	5E+0	2E-9	8E-12	-	-
49	Indium-116m[2]	D, see ^{109}In	2E+4	8E+4	3E-5	1E-7	3E-4	3E-3
		W, see ^{109}In	-	1E+5	5E-5	2E-7	-	-
49	Indium-117m[2]	D, see ^{109}In	1E+4	3E+4	1E-5	5E-8	2E-4	2E-3
		W, see ^{109}In	-	4E+4	2E-5	6E-8	-	-
49	Indium-117[2]	D, see ^{109}In	6E+4	2E+5	7E-5	2E-7	8E-4	8E-3
		W, see ^{109}In	-	2E+5	9E-5	3E-7	-	-
49	Indium-119m[2]	D, see ^{109}In	4E+4	1E+5	5E-5	2E-7	-	-
			St wall (5E+4)	-	-	-	7E-4	7E-3
		W, see ^{109}In	-	1E+5	6E-5	2E-7	-	-
50	Tin-110	D, all compounds except those given for W	4E+3	1E+4	5E-6	2E-8	5E-5	5E-4
		W, sulfides, oxides, hydroxides, halides, nitrates, and stannic phosphate	-	1E+4	5E-6	2E-8	-	-
50	Tin-111[2]	D, see ^{110}Sn	7E+4	2E+5	9E-5	3E-7	1E-3	1E-2
		W, see ^{110}Sn	-	3E+5	1E-4	4E-7	-	-

Tables I, II, and III								
Atomic No.	Radionuclide	Class	Table I Occupational Values			Table II Effluent Concentrations		Table III Releases to Sewers
			Col. 1	Col. 2	Col. 3	Col. 1	Col. 2	Monthly Average Concen-tration (µCi/ml)
			Oral Ingestion ALI (µCi)	Inhalation ALI (µCi)	Inhalation DAC (µCi/ml)	Air (µCi/ml)	Water (µCi/ml)	
50	Tin-113	D, see ^{110}Sn	2E+3	1E+3	5E-7	2E-9	-	-
			LLI wall (2E+3)	-	-	-	3E-5	3E-4
		W, see ^{110}Sn	-	5E+2	2E-7	8E-10	-	-
50	Tin-117m	D, see ^{110}Sn	2E+3	1E+3	5E-7	-	-	-
			LLI wall (2E+3)	Bone surf (2E+3)	-	3E-9	3E-5	3E-4
		W, see ^{110}Sn	-	1E+3	6E-7	2E-9	-	-
50	Tin-119m	D, see ^{110}Sn	3E+3	2E+3	1E-6	3E-9	-	-
			LLI wall (4E+3)	-	-	-	6E-5	6E-4
		W, see ^{110}Sn	-	1E+3	4E-7	1E-9	-	-
50	Tin-121m	D, see ^{110}Sn	3E+3	9E+2	4E-7	1E-9	-	-
			LLI wall (4E+3)	-	-	-	5E-5	5E-4
		W, see ^{110}Sn	-	5E+2	2E-7	8E-10	-	-
50	Tin-121	D, see ^{110}Sn	6E+3	2E+4	6E-6	2E-8	-	-
			LLI wall (6E+3)	-	-	-	8E-5	8E-4
		W, see ^{110}Sn	-	1E+4	5E-6	2E-8	-	-
50	Tin-123m[2]	D, see ^{110}Sn	5E+4	1E+5	5E-5	2E-7	7E-4	7E-3
		W, see ^{110}Sn	-	1E+5	6E-5	2E-7	-	-
50	Tin-123	D, see ^{110}Sn	5E+2	6E+2	3E-7	9E-10	-	-
			LLI wall (6E+2)	-	-	-	9E-6	9E-5
		W, see ^{110}Sn	-	2E+2	7E-8	2E-10	-	-
50	Tin-125	D, see ^{110}Sn	4E+2	9E+2	4E-7	1E-9	-	-
			LLI wall (5E+2)	-	-	-	6E-6	6E-5
		W, see ^{110}Sn	-	4E+2	1E-7	5E-10	-	-
50	Tin-126	D, see ^{110}Sn	3E+2	6E+1	2E-8	8E-11	4E-6	4E-5
		W, see ^{110}Sn	-	7E+1	3E-8	9E-11	-	-
50	Tin-127	D, see ^{110}Sn	7E+3	2E+4	8E-6	3E-8	9E-5	9E-4
		W, see ^{110}Sn	-	2E+4	8E-6	3E-8	-	-
50	Tin-128[2]	D, see ^{110}Sn	9E+3	3E+4	1E-5	4E-8	1E-4	1E-3
		W, see ^{110}Sn	-	4E+4	1E-5	5E-8	-	-
51	Antimony-115[2]	D, all compounds except those given for W	8E+4	2E+5	1E-4	3E-7	1E-3	1E-2
		W, oxides, hydroxides, halides, sulfides, sulfates, and nitrates	-	3E+5	1E-4	4E-7	-	-
51	Antimony-116m[2]	D, see ^{115}Sb	2E+4	7E+4	3E-5	1E-7	3E-4	3E-3
		W, see ^{115}Sb	-	1E+5	6E-5	2E-7	-	-
51	Antimony-116[2]	D, see ^{115}Sb	7E+4	3E+5	1E-4	4E-7	-	-
			St wall (9E+4)	-	-	-	1E-3	1E-2
		W, see ^{115}Sb	-	3E+5	1E-4	5E-7	-	-
51	Antimony-117	D, see ^{115}Sb	7E+4	2E+5	9E-5	3E-7	9E-4	9E-3
		W, see ^{115}Sb	-	3E+5	1E-4	4E-7	-	-
51	Antimony-118m	D, see ^{115}Sb	6E+3	2E+4	8E-6	3E-8	7E-5	7E-4
		W, see ^{115}Sb	5E+3	2E+4	9E-6	3E-8	-	-
51	Antimony-119	D, see ^{115}Sb	2E+4	5E+4	2E-5	6E-8	2E-4	2E-3
		W, see ^{115}Sb	2E+4	3E+4	1E-5	4E-8	-	-
51	Antimony-120[2] (16 min)	D, see ^{115}Sb	1E+5	4E+5	2E-4	6E-7	-	-
			St wall (2E+5)	-	-	-	2E-3	2E-2
		W, see ^{115}Sb	-	5E+5	2E-4	7E-7	-	-
51	Antimony-120 (5.76 d)	D, see ^{115}Sb	1E+3	2E+3	9E-7	3E-9	1E-5	1E-4
		W, see ^{115}Sb	9E+2	1E+3	5E-7	2E-9	-	-

Tables I, II, and III								
Atomic No.	**Radionuclide**	**Class**	**Table I Occupational Values**			**Table II Effluent Concentrations**		**Table III Releases to Sewers**
			Col. 1	**Col. 2**	**Col. 3**	**Col. 1**	**Col. 2**	**Monthly Average Concen-tration (µCi/ml)**
			Oral Ingestion ALI (µCi)	**Inhalation**		**Air (µCi/ml)**	**Water (µCi/ml)**	
				ALI (µCi)	**DAC (µCi/ml)**			
51	Antimony-122	D, see ^{115}Sb	8E+2	2E+3	1E-6	3E-9	-	-
			LLI wall (8E+2)	-	-	-	1E-5	1E-4
		W, see ^{115}Sb	7E+2	1E+3	4E-7	2E-9	-	-
51	Antimony-124m[2]	D, see ^{115}Sb	3E+5	8E+5	4E-4	1E-6	3E-3	3E-2
		W, see ^{115}Sb	2E+5	6E+5	2E-4	8E-7	-	-
51	Antimony-124	D, see ^{115}Sb	6E+2	9E+2	4E-7	1E-9	7E-6	7E-5
		W, see ^{115}Sb	5E+2	2E+2	1E-7	3E-10	-	-
51	Antimony-125	D, see ^{115}Sb	2E+3	2E+3	1E-6	3E-9	3E-5	3E-4
		W, see ^{115}Sb	-	5E+2	2E-7	7E-10	-	-
51	Antimony-126m[2]	D, see ^{115}Sb	5E+4	2E+5	8E-5	3E-7	-	-
			St wall (7E+4)	-	-	-	9E-4	9E-3
		W, see ^{115}Sb	-	2E+5	8E-5	3E-7	-	-
51	Antimony-126	D, see ^{115}Sb	6E+2	1E+3	5E-7	2E-9	7E-6	7E-5
		W, see ^{115}Sb	5E+2	5E+2	2E-7	7E-10	-	-
51	Antimony-127	D, see ^{115}Sb	8E+2	2E+3	9E-7	3E-9	-	-
			LLI wall (8E+2)	-	-	-	1E-5	1E-4
		W, see ^{115}Sb	7E+2	9E+2	4E-7	1E-9	-	-
51	Antimony-128[2] (10.4 min)	D, see ^{115}Sb	8E+4	4E+5	2E-4	5E-7	-	-
			St wall (1E+5)	-	-	-	1E-3	1E-2
		W, see ^{115}Sb	-	4E+5	2E-4	6E-7	-	-
51	Antimony-128 (9.01 h)	D, see ^{115}Sb	1E+3	4E+3	2E-6	6E-9	2E-5	2E-4
		W, see ^{115}Sb	-	3E+3	1E-6	5E-9	-	-
51	Antimony-129	D, see ^{115}Sb	3E+3	9E+3	4E-6	1E-8	4E-5	4E-4
		W, see ^{115}Sb	-	9E+3	4E-6	1E-8	-	-
51	Antimony-130[2]	D, see ^{115}Sb	2E+4	6E+4	3E-5	9E-8	3E-4	3E-3
		W, see ^{115}Sb	-	8E+4	3E-5	1E-7	-	-
51	Antimony-131[2]	D, see ^{115}Sb	1E+4	2E+4	1E-5	-	-	-
			Thyroid (2E+4)	Thyroid (4E+4)	-	6E-8	2E-4	2E-3
		W, see ^{115}Sb	-	2E+4	1E-5		-	-
			-	Thyroid (4E+4)	-	6E-8	-	-
52	Tellurium-116	D, all compounds except those given for W	8E+3	2E+4	9E-6	3E-8	1E-4	1E-3
		W, oxides, hydroxides, and nitrates	-	3E+4	1E-5	4E-8	-	-
52	Tellurium-121m	D, see ^{116}Te	5E+2	2E+2	8E-8	-	-	-
			Bone surf (7E+2)	Bone surf 4E+2)	-	5E-10	1E-5	1E-4
		W, see ^{116}Te	-	4E+2	2E-7	6E-10	-	-
52	Tellurium-121	D, see ^{116}Te	3E+3	4E+3	2E-6	6E-9	4E-5	4E-4
		W, see ^{116}Te	-	3E+3	1E-6	4E-9	-	-
52	Tellurium-123m	D, see ^{116}Te	6E+2	2E+2	9E-8	-	-	-
			Bone surf (1E+3)	Bone surf (5E+2)	-	8E-10	1E-5	1E-4
		W, see ^{116}Te	-	5E+2	2E-7	8E-10	-	-
52	Tellurium-123	D, see ^{116}Te	5E+2	2E+2	8E-8	-	-	-
			Bone surf (1E+3)	Bone surf (5E+2)	-	7E-10	2E-5	2E-4
		W, see ^{116}Te	-	4E+2	2E-7	-	-	-
			-	Bone surf (1E+3)	-	2E-9	-	-

Tables I, II, and III								
Atomic No.	Radionuclide	Class	Table I Occupational Values			Table II Effluent Concentrations		Table III Releases to Sewers
			Col. 1	Col. 2	Col. 3	Col. 1	Col. 2	Monthly Average Concen-tration (µCi/ml)
			Oral Ingestion ALI (µCi)	Inhalation ALI (µCi)	Inhalation DAC (µCi/ml)	Air (µCi/ml)	Water (µCi/ml)	
52	Tellurium-125m	D, see ^{116}Te	1E+3	4E+2	2E-7	-	-	-
			Bone surf (1E+3)	Bone surf 1E+3)	-	1E-9	2E-5	2E-4
		W, see ^{116}Te	-	7E+2	3E-7	1E-9	-	-
52	Tellurium-127m	D, see ^{116}Te	6E+2	3E+2	1E-7	-	9E-6	9E-5
			-	Bone surf (4E+2)	-	6E-10	-	-
		W, see ^{116}Te	-	3E+2	1E-7	4E-10	-	-
52	Tellurium-127	D, see ^{116}Te	7E+3	2E+4	9E-6	3E-8	1E-4	1E-3
		W, see ^{116}Te	-	2E+4	7E-6	2E-8	-	-
52	Tellurium-129m	D, see ^{116}Te	5E+2	6E+2	3E-7	9E-10	7E-6	7E-5
		W, see ^{116}Te	-	2E+2	1E-7	3E-10	-	-
52	Tellurium-129[2]	D, see ^{116}Te	3E+4	6E+4	3E-5	9E-8	4E-4	4E-3
		W, see ^{116}Te	-	7E+4	3E-5	1E-7	-	-
52	Tellurium-131m	D, see ^{116}Te	3E+2	4E+2	2E-7	-	-	-
			Thyroid (6E+2)	Thyroid (1E+3)	-	2E-9	8E-6	8E-5
		W, see ^{116}Te	-	4E+2	2E-7	-	-	-
			-	Thyroid (9E+2)	-	1E-9	-	-
52	Tellurium-131[2]	D, see ^{116}Te	3E+3	5E+3	2E-6	-	-	-
			Thyroid (6E+3)	Thyroid (1E+4)	-	2E-8	8E-5	8E-4
		W, see ^{116}Te	-	5E+3	2E-6	-	-	-
			-	Thyroid (1E+4)	-	2E-8	-	-
52	Tellurium-132	D, see ^{116}Te	2E+2	2E+2	9E-8	-	-	-
			Thyroid (7E+2)	Thyroid (8E+2)	-	1E-9	9E-6	9E-5
		W, see ^{116}Te	-	2E+2	9E-8	-	-	-
			-	Thyroid (6E+2)	-	9E-10	-	-
52	Tellurium-133m[2]	D, see ^{116}Te	3E+3	5E+3	2E-6	-	-	-
			Thyroid (6E+3)	Thyroid (1E+4)	-	2E-8	9E-5	9E-4
		W, see ^{116}Te	-	5E+3	2E-6	-	-	-
			-	Thyroid (1E+4)	-	2E-8	-	-
52	Tellurium-133[2]	D, see ^{116}Te	1E+4	2E+4	9E-6	-	-	-
			Thyroid (3E+4)	Thyroid (6E+4)	-	8E-8	4E-4	4E-3
		W, see ^{116}Te	-	2E+4	9E-6	-	-	-
			-	Thyroid (6E+4)	-	8E-8	-	-
52	Tellurium-134[2]	D, see ^{116}Te	2E+4	2E+4	1E-5	-	-	-
			Thyroid (2E+4)	Thyroid (5E+4)	-	7E-8	3E-4	3E-3
		W, see ^{116}Te	-	2E+4	1E-5	-	-	-
			-	Thyroid (5E+4)	-	7E-8	-	-
53	Iodine-120m[2]	D, all compounds	1E+4	2E+4	9E-6	3E-8	-	-
			Thyroid (1E+4)	-	-	-	2E-4	2E-3
53	Iodine-120[2]	D, all compounds	4E+3	9E+3	4E-6	-	-	-
			Thyroid (8E+3)	Thyroid (1E+4)	-	2E-8	1E-4	1E-3
53	Iodine-121	D, all compounds	1E+4	2E+4	8E-6	-	-	-
			Thyroid (3E+4)	Thyroid (5E+4)	-	7E-8	4E-4	4E-3
53	Iodine-123	D, all compounds	3E+3	6E+3	3E-6	-	-	-
			Thyroid (1E+4)	Thyroid (2E+4)	-	2E-8	1E-4	1E-3

Tables I, II, and III								
Atomic No.	**Radionuclide**	**Class**	**Table I Occupational Values**			**Table II Effluent Concentrations**		**Table III Releases to Sewers**
			Col. 1	**Col. 2**	**Col. 3**	**Col. 1**	**Col. 2**	**Monthly Average Concen-tration (µCi/ml)**
			Oral Ingestion ALI (µCi)	**Inhalation**		**Air (µCi/ml)**	**Water (µCi/ml)**	
				ALI (µCi)	**DAC (µCi/ml)**			
53	Iodine-124	D, all compounds	5E+1	8E+1	3E-8	-	-	-
			Thyroid (2E+2)	Thyroid (3E+2)	-	4E-10	2E-6	2E-5
53	Iodine-125	D, all compounds	4E+1	6E+1	3E-8	-	-	-
			Thyroid (1E+2)	Thyroid (2E+2)	-	3E-10	2E-6	2E-5
53	Iodine-126	D, all compounds	2E+1	4E+1	1E-8	-	-	-
			Thyroid (7E+1)	Thyroid (1E+2)	-	2E-10	1E-6	1E-5
53	Iodine-128[2]	D, all compounds	4E+4	1E+5	5E-5	2E-7	-	-
			St wall (6E+4)	-	-	-	8E-4	8E-3
53	Iodine-129	D, all compounds	5E+0	9E+0	4E-9	-	-	-
			Thyroid (2E+1)	Thyroid (3E+1)	-	4E-11	2E-7	2E-6
53	Iodine-130	D, all compounds	4E+2	7E+2	3E-7	-	-	-
			Thyroid (1E+3)	Thyroid (2E+3)	-	3E-9	2E-5	2E-4
53	Iodine-131	D, all compounds	3E+1	5E+1	2E-8	-	-	-
			Thyroid (9E+1)	Thyroid (2E+2)	-	2E-10	1E-6	1E-5
53	Iodine-132m[2]	D, all compounds	4E+3	8E+3	4E-6	-	-	-
			Thyroid (1E+4)	Thyroid (2E+4)	-	3E-8	1E-4	1E-3
53	Iodine-132	D, all compounds	4E+3	8E+3	3E-6	-	-	-
			Thyroid (9E+3)	Thyroid (1E+4)	-	2E-8	1E-4	1E-3
53	Iodine-133	D, all compounds	1E+2	3E+2	1E-7	-	-	-
			Thyroid (5E+2)	Thyroid (9E+2)	-	1E-9	7E-6	7E-5
53	Iodine-134[2]	D, all compounds	2E+4	5E+4	2E-5	6E-8	-	-
			Thyroid (3E+4)	-	-	-	4E-4	4E-3
53	Iodine-135	D, all compounds	8E+2	2E+3	7E-7	-	-	-
			Thyroid (3E+3)	Thyroid (4E+3)	-	6E-9	3E-5	3E-4
54	Xenon-120[2]	Submersion[1]	-	-	1E-5	4E-8	-	-
54	Xenon-121[2]	Submersion[1]	-	-	2E-6	1E-8	-	-
54	Xenon-122	Submersion[1]	-	-	7E-5	3E-7	-	-
54	Xenon-123	Submersion[1]	-	-	6E-6	3E-8	-	-
54	Xenon-125	Submersion[1]	-	-	2E-5	7E-8	-	-
54	Xenon-127	Submersion[1]	-	-	1E-5	6E-8	-	-
54	Xenon-129m	Submersion[1]	-	-	2E-4	9E-7	-	-
54	Xenon-131m	Submersion[1]	-	-	4E-4	2E-6	-	-
54	Xenon-133m	Submersion[1]	-	-	1E-4	6E-7	-	-
54	Xenon-133	Submersion[1]	-	-	1E-4	5E-7	-	-
54	Xenon-135m[2]	Submersion[1]	-	-	9E-6	4E-8	-	-
54	Xenon-135	Submersion[1]	-	-	1E-5	7E-8	-	-
54	Xenon-138[2]	Submersion[1]	-	-	4E-6	2E-8	-	-
55	Cesium-125[2]	D, all compounds	5E+4	1E+5	6E-5	2E-7	-	-
			St wall (9E+4)	-	-	-	1E-3	1E-2
55	Cesium-127	D, all compounds	6E+4	9E+4	4E-5	1E-7	9E-4	9E-3
55	Cesium-129	D, all compounds	2E+4	3E+4	1E-5	5E-8	3E-4	3E-3
55	Cesium-130[2]	D, all compounds	6E+4	2E+5	8E-5	3E-7	-	-
			St wall (1E+5)	-	-	-	1E-3	1E-2
55	Cesium-131	D, all compounds	2E+4	3E+4	1E-5	4E-8	3E-4	3E-3
55	Cesium-132	D, all compounds	3E+3	4E+3	2E-6	6E-9	4E-5	4E-4

Tables I, II, and III								
Atomic No.	Radionuclide	Class	Table I Occupational Values			Table II Effluent Concentrations		Table III Releases to Sewers
			Col. 1	Col. 2	Col. 3	Col. 1	Col. 2	Monthly Average Concen-tration (µCi/ml)
			Oral Ingestion ALI (µCi)	Inhalation ALI (µCi)	Inhalation DAC (µCi/ml)	Air (µCi/ml)	Water (µCi/ml)	
55	Cesium-134m	D, all compounds	1E+5	1E+5	6E-5	2E-7	-	-
			St wall (1E+5)	-	-	-	2E-3	2E-2
55	Cesium-134	D, all compounds	7E+1	1E+2	4E-8	2E-10	9E-7	9E-6
55	Cesium-135m[2]	D, all compounds	1E+5	2E+5	8E-5	3E-7	1E-3	1E-2
55	Cesium-135	D, all compounds	7E+2	1E+3	5E-7	2E-9	1E-5	1E-4
55	Cesium-136	D, all compounds	4E+2	7E+2	3E-7	9E-10	6E-6	6E-5
55	Cesium-137	D, all compounds	1E+2	2E+2	6E-8	2E-10	1E-6	1E-5
55	Cesium-138[2]	D, all compounds	2E+4	6E+4	2E-5	8E-8	-	-
			St wall (3E+4)	-	-	-	4E-4	4E-3
56	Barium-126[2]	D, all compounds	6E+3	2E+4	6E-6	2E-8	8E-5	8E-4
56	Barium-128	D, all compounds	5E+2	2E+3	7E-7	2E-9	7E-6	7E-5
56	Barium-131m[2]	D, all compounds	4E+5	1E+6	6E-4	2E-6	-	-
			St wall (5E+5)	-	-	-	7E-3	7E-2
56	Barium-131	D, all compounds	3E+3	8E+3	3E-6	1E-8	4E-5	4E-4
56	Barium-133m	D, all compounds	2E+3	9E+3	4E-6	1E-8	-	-
			LLI wall (3E+3)	-	-	-	4E-5	4E-4
56	Barium-133	D, all compounds	2E+3	7E+2	3E-7	9E-10	2E-5	2E-4
56	Barium-135m	D, all compounds	3E+3	1E+4	5E-6	2E-8	4E-5	4E-4
56	Barium-139[2]	D, all compounds	1E+4	3E+4	1E-5	4E-8	2E-4	2E-3
56	Barium-140	D, all compounds	5E+2	1E+3	6E-7	2E-9	-	-
			LLI wall (6E+2)	-	-	-	8E-6	8E-5
56	Barium-141[2]	D, all compounds	2E+4	7E+4	3E-5	1E-7	3E-4	3E-3
56	Barium-142[2]	D, all compounds	5E+4	1E+5	6E-5	2E-7	7E-4	7E-3
57	Lanthanum-131[2]	D, all compounds except those given for W	5E+4	1E+5	5E-5	2E-7	6E-4	6E-3
		W, oxides and hydroxides	-	2E+5	7E-5	2E-7	-	-
57	Lanthanum-132	D, see ^{131}La	3E+3	1E+4	4E-6	1E-8	4E-5	4E-4
		W, see ^{131}La	-	1E+4	5E-6	2E-8	-	-
57	Lanthanum-135	D, see ^{131}La	4E+4	1E+5	4E-5	1E-7	5E-4	5E-3
		W, see ^{131}La	-	9E+4	4E-5	1E-7	-	-
57	Lanthanum-137	D, see ^{131}La	1E+4	6E+1	3E-8	-	2E-4	2E-3
			-	Liver (7E+1)	-	1E-10	-	-
		W, see ^{131}La	-	3E+2	1E-7	-	-	-
			-	Liver (3E+2)	-	4E-10	-	-
57	Lanthanum-138	D, see ^{131}La	9E+2	4E+0	1E-9	5E-12	1E-5	1E-4
		W, see ^{131}La	-	1E+1	6E-9	2E-11	-	-
57	Lanthanum-140	D, see ^{131}La	6E+2	1E+3	6E-7	2E-9	9E-6	9E-5
		W, see ^{131}La	-	1E+3	5E-7	2E-9	-	-
57	Lanthanum-141	D, see ^{131}La	4E+3	9E+3	4E-6	1E-8	5E-5	5E-4
		W, see ^{131}La	-	1E+4	5E-6	2E-8	-	-
57	Lanthanum-142[2]	D, see ^{131}La	8E+3	2E+4	9E-6	3E-8	1E-4	1E-3
		W, see ^{131}La	-	3E+4	1E-5	5E-8	-	-
57	Lanthanum-143[2]	D, see ^{131}La	4E+4	1E+5	4E-5	1E-7	-	-
			St wall (4E+4)	-	-	-	5E-4	5E-3
		W, see ^{131}La	-	9E+4	4E-5	1E-7	-	-
58	Cerium-134	W, all compounds except those given for Y	5E+2	7E+2	3E-7	1E-9	-	-
			LLI wall (6E+2)	-	-	-	8E-6	8E-5
		Y, oxides, hydroxides, and fluorides	-	7E+2	3E-7	9E-10	-	-

Tables I, II, and III								
Atomic No.	**Radionuclide**	**Class**	**Table I Occupational Values**			**Table II Effluent Concentrations**		**Table III Releases to Sewers**
			Col. 1	**Col. 2**	**Col. 3**	**Col. 1**	**Col. 2**	**Monthly Average Concen-tration (µCi/ml)**
			Oral Ingestion ALI (µCi)	**Inhalation**		**Air (µCi/ml)**	**Water (µCi/ml)**	
				ALI (µCi)	**DAC (µCi/ml)**			
58	Cerium-135	W, see ^{134}Ce	2E+3	4E+3	2E-6	5E-9	2E-5	2E-4
		Y, see ^{134}Ce	-	4E+3	1E-6	5E-9	-	-
58	Cerium-137m	W, see ^{134}Ce	2E+3	4E+3	2E-6	6E-9	-	-
			LLI wall (2E+3)	-	-	-	3E-5	3E-4
		Y, see ^{134}Ce	-	4E+3	2E-6	5E-9	-	-
58	Cerium-137	W, see ^{134}Ce	5E+4	1E+5	6E-5	2E-7	7E-4	7E-3
		Y, see ^{134}Ce	-	1E+5	5E-5	2E-7	-	-
58	Cerium-139	W, see ^{134}Ce	5E+3	8E+2	3E-7	1E-9	7E-5	7E-4
		Y, see ^{134}Ce	-	7E+2	3E-7	9E-10	-	-
58	Cerium-141	W, see ^{134}Ce	2E+3	7E+2	3E-7	1E-9	-	-
			LLI wall (2E+3)	-	-	-	3E-5	3E-4
		Y, see ^{134}Ce	-	6E+2	2E-7	8E-10	-	-
58	Cerium-143	W, see ^{134}Ce	1E+3	2E+3	8E-7	3E-9	-	-
			LLI wall (1E+3)	-	-	-	2E-5	2E-4
		Y, see ^{134}Ce	-	2E+3	7E-7	2E-9	-	-
58	Cerium-144	W, see ^{134}Ce	2E+2	3E+1	1E-8	4E-11	-	-
			LLI wall (3E+2)	-	-	-	3E-6	3E-5
		Y, see ^{134}Ce	-	1E+1	6E-9	2E-11	-	-
59	Praseodymium-136[2]	W, all compounds except those given for Y	5E+4	2E+5	1E-4	3E-7	-	-
			St wall (7E+4)	-	-	-	1E-3	1E-2
		Y, oxides, hydroxides, carbides, and fluorides	-	2E+5	9E-5	3E-7		-
59	Praseodymium-137[2]	W, see ^{136}Pr	4E+4	2E+5	6E-5	2E-7	5E-4	5E-3
		Y, see ^{136}Pr	-	1E+5	6E-5	2E-7	-	-
59	Praseodymium-138m	W, see ^{136}Pr	1E+4	5E+4	2E-5	8E-8	1E-4	1E-3
		Y, see ^{136}Pr	-	4E+4	2E-5	6E-8	-	-
59	Praseodymium-139	W, see ^{136}Pr	4E+4	1E+5	5E-5	2E-7	6E-4	6E-3
		Y, see ^{136}Pr	-	1E+5	5E-5	2E-7	-	-
59	Praseodymium-142m[2]	W, see ^{136}Pr	8E+4	2E+5	7E-5	2E-7	1E-3	1E-2
		Y, see ^{136}Pr	-	1E+5	6E-5	2E-7	-	-
59	Praseodymium-142	W, see ^{136}Pr	1E+3	2E+3	9E-7	3E-9	1E-5	1E-4
		Y, see ^{136}Pr	-	2E+3	8E-7	3E-9	-	-
59	Praseodymium-143	W, see ^{136}Pr	9E+2	8E+2	3E-7	1E-9	-	-
			LLI wall (1E+3)	-	-	-	2E-5	2E-4
		Y, see ^{136}Pr	-	7E+2	3E-7	9E-10	-	-
59	Praseodymium-144[2]	W, see ^{136}Pr	3E+4	1E+5	5E-5	2E-7	-	-
			St wall (4E+4)	-	-	-	6E-4	6E-3
		Y, see ^{136}Pr	-	1E+5	5E-5	2E-7	-	-
59	Praseodymium-145	W, see ^{136}Pr	3E+3	9E+3	4E-6	1E-8	4E-5	4E-4
		Y, see ^{136}Pr	-	8E+3	3E-6	1E-8	-	-
59	Praseodymium-147[2]	W, see ^{136}Pr	5E+4	2E+5	8E-5	3E-7	-	-
			St wall (8E+4)	-	-	-	1E-3	1E-2
		Y, see ^{136}Pr	-	2E+5	8E-5	3E-7	-	-
60	Neodymium-136[2]	W, all compounds except those given for Y	1E+4	6E+4	2E-5	8E-8	2E-4	2E-3
		Y, oxides, hydroxides, carbides, and fluorides	-	5E+4	2E-5	8E-8	-	-
60	Neodymium-138	W, see ^{136}Nd	2E+3	6E+3	3E-6	9E-9	3E-5	3E-4
		Y, see ^{136}Nd	-	5E+3	2E-6	7E-9	-	-

Tables I, II, and III								
Atomic No.	Radionuclide	Class	Table I Occupational Values			Table II Effluent Concentrations		Table III Releases to Sewers
			Col. 1	Col. 2	Col. 3	Col. 1	Col. 2	Monthly Average Concen-tration (µCi/ml)
			Oral Ingestion ALI (µCi)	Inhalation ALI (µCi)	Inhalation DAC (µCi/ml)	Air (µCi/ml)	Water (µCi/ml)	
60	Neodymium-139m	W, see ^{136}Nd	5E+3	2E+4	7E-6	2E-8	7E-5	7E-4
		Y, see ^{136}Nd	-	1E+4	6E-6	2E-8	-	-
60	Neodymium-139[2]	W, see ^{136}Nd	9E+4	3E+5	1E-4	5E-7	1E-3	1E-2
		Y, see ^{136}Nd	-	3E+5	1E-4	4E-7	-	-
60	Neodymium-141	W, see ^{136}Nd	2E+5	7E+5	3E-4	1E-6	2E-3	2E-2
		Y, see ^{136}Nd	-	6E+5	3E-4	9E-7	-	-
60	Neodymium-147	W, see ^{136}Nd	1E+3	9E+2	4E-7	1E-9	-	-
			LLI wall (1E+3)	-	-	-	2E-5	2E-4
		Y, see ^{136}Nd	-	8E+2	4E-7	1E-9	-	-
60	Neodymium-149[2]	W, see ^{136}Nd	1E+4	3E+4	1E-5	4E-8	1E-4	1E-3
		Y, see ^{136}Nd	-	2E+4	1E-5	3E-8	-	-
60	Neodymium-151[2]	W, see ^{136}Nd	7E+4	2E+5	8E-5	3E-7	9E-4	9E-3
		Y, see ^{136}Nd	-	2E+5	8E-5	3E-7	-	-
61	Promethium-141[2]	W, all compounds except those given for Y	5E+4	2E+5	8E-5	3E-7	-	-
			St wall (6E+4)	-	-	-	8E-4	8E-3
		Y, oxides, hydroxides, carbides, and fluorides	-	2E+5	7E-5	2E-7	-	-
61	Promethium-143	W, see ^{141}Pm	5E+3	6E+2	2E-7	8E-10	7E-5	7E-4
		Y, see ^{141}Pm	-	7E+2	3E-7	1E-9	-	-
61	Promethium-144	W, see ^{141}Pm	1E+3	1E+2	5E-8	2E-10	2E-5	2E-4
		Y, see ^{141}Pm	-	1E+2	5E-8	2E-10	-	-
61	Promethium-145	W, see ^{141}Pm	1E+4	2E+2	7E-8	-	1E-4	1E-3
			-	Bone surf (2E+2)	-	3E-10	-	-
		Y, see ^{141}Pm	-	2E+2	8E-8	3E-10	-	-
61	Promethium-146	W, see ^{141}Pm	2E+3	5E+1	2E-8	7E-11	2E-5	2E-4
		Y, see ^{141}Pm	-	4E+1	2E-8	6E-11	-	-
61	Promethium-147	W, see ^{141}Pm	4E+3	1E+2	5E-8	-	-	-
			LLI wall (5E+3)	Bone surf (2E+2)	-	3E-10	7E-5	7E-4
		Y, see ^{141}Pm	-	1E+2	6E-8	2E-10	-	-
61	Promethium-148m	W, see ^{141}Pm	7E+2	3E+2	1E-7	4E-10	1E-5	1E-4
		Y, see ^{141}Pm	-	3E+2	1E-7	5E-10	-	-
61	Promethium-148	W, see ^{141}Pm	4E+2	5E+2	2E-7	8E-10	-	-
			LLI wall (5E+2)	-	-	-	7E-6	7E-5
		Y, see ^{141}Pm	-	5E+2	2E-7	7E-10	-	-
61	Promethium-149	W, see ^{141}Pm	1E+3	2E+3	8E-7	3E-9	-	-
			LLI wall (1E+3)	-	-	-	2E-5	2E-4
		Y, see ^{141}Pm	-	2E+3	8E-7	2E-9	-	-
61	Promethium-150	W, see ^{141}Pm	5E+3	2E+4	8E-6	3E-8	7E-5	7E-4
		Y, see ^{141}Pm	-	2E+4	7E-6	2E-8	-	-
61	Promethium-151	W, see ^{141}Pm	2E+3	4E+3	1E-6	5E-9	2E-5	2E-4
		Y, see ^{141}Pm	-	3E+3	1E-6	4E-9	-	-
62	Samarium-141m[2]	W, all compounds	3E+4	1E+5	4E-5	1E-7	4E-4	4E-3
62	Samarium-141[2]	W, all compounds	5E+4	2E+5	8E-5	2E-7	-	-
			St wall (6E+4)	-	-	-	8E-4	8E-3
62	Samarium-142[2]	W, all compounds	8E+3	3E+4	1E-5	4E-8	1E-4	1E-3
62	Samarium-145	W, all compounds	6E+3	5E+2	2E-7	7E-10	8E-5	8E-4
62	Samarium-146	W, all compounds	1E+1	4E+2	1E-11	-	-	-
			Bone surf (3E+1)	Bone surf (6E-2)	-	9E-14	3E-7	3E-6
62	Samarium-147	W, all compounds	2E+1	4E-2	2E-11	-	-	-
			Bone surf (3E+1)	Bone surf (7E-2)	-	1E-13	4E-7	4E-6

Tables I, II, and III								
Atomic No.	**Radionuclide**	**Class**	**Table I Occupational Values**			**Table II Effluent Concentrations**		**Table III Releases to Sewers**
			Col. 1	**Col. 2**	**Col. 3**	**Col. 1**	**Col. 2**	**Monthly Average Concen-tration (µCi/ml)**
			Oral Ingestion ALI (µCi)	**Inhalation**		**Air (µCi/ml)**	**Water (µCi/ml)**	
				ALI (µCi)	**DAC (µCi/ml)**			
62	Samarium-151	W, all compounds	1E+4	1E+2	4E-8	-	-	-
			LLI wall (1E+4)	Bone surf (2E+2)	-	2E-10	2E-4	2E-3
62	Samarium-153	W, all compounds	2E+3	3E+3	1E-6	4E-9	-	-
			LLI wall (2E+3)	-	-	-	3E-5	3E-4
62	Samarium-155[2]	W, all compounds	6E+4	2E+5	9E-5	3E-7	-	-
			St wall (8E+4)	-	-	-	1E-3	1E-2
62	Samarium-156	W, all compounds	5E+3	9E+3	4E-6	1E-8	7E-5	7E-4
63	Europium-145	W, all compounds	2E+3	2E+3	8E-7	3E-9	2E-5	2E-4
63	Europium-146	W, all compounds	1E+3	1E+3	5E-7	2E-9	1E-5	1E-4
63	Europium-147	W, all compounds	3E+3	2E+3	7E-7	2E-9	4E-5	4E-4
63	Europium-148	W, all compounds	1E+3	4E+2	1E-7	5E-10	1E-5	1E-4
63	Europium-149	W, all compounds	1E+4	3E+3	1E-6	4E-9	2E-4	2E-3
63	Europium-150 (12.62 h)	W, all compounds	3E+3	8E+3	4E-6	1E-8	4E-5	4E-4
63	Europium-150 (34.2 y)	W, all compounds	8E+2	2E+1	8E-9	3E-11	1E-5	1E-4
63	Europium-152m	W, all compounds	3E+3	6E+3	3E-6	9E-9	4E-5	4E-4
63	Europium-152	W, all compounds	8E+2	2E+1	1E-8	3E-11	1E-5	1E-4
63	Europium-154	W, all compounds	5E+2	2E+1	8E-9	3E-11	7E-6	7E-5
63	Europium-155	W, all compounds	4E+3	9E+1	4E-8	-	5E-5	5E-4
			-	Bone surf (1E+2)	-	2E-10	-	-
63	Europium-156	W, all compounds	6E+2	5E+2	2E-7	6E-10	8E-6	8E-5
63	Europium-157	W, all compounds	2E+3	5E+3	2E-6	7E-9	3E-5	3E-4
63	Europium-158[2]	W, all compounds	2E+4	6E+4	2E-5	8E-8	3E-4	3E-3
64	Gadolinium-145[2]	D, all compounds except those given for W	5E+4	2E+5	6E-5	2E-7	-	-
			St wall (5E+4)	-	-	-	6E-4	6E-3
		W, oxides, hydroxides, and fluorides	-	2E+5	7E-5	2E-7	-	-
64	Gadolinium-146	D, see ^{145}Gd	1E+3	1E+2	5E-8	2E-10	2E-5	2E-4
		W, see ^{145}Gd	-	3E+2	1E-7	4E-10	-	-
64	Gadolinium-147	D, see ^{145}Gd	2E+3	4E+3	2E-6	6E-9	3E-5	3E-4
		W, see ^{145}Gd	-	4E+3	1E-6	5E-9	-	-
64	Gadolinium-148	D, see ^{145}Gd	1E+1	8E+3	3E-12	-	-	-
			Bone surf (2E+1)	Bone surf (2E-2)	-	2E-14	3E-7	3E-6
		W, see ^{145}Gd	-	3E-2	1E-11	-	-	-
			-	Bone surf (6E-2)	-	8E-14	-	-
64	Gadolinium-149	D, see ^{145}Gd	3E+3	2E+3	9E-7	3E-9	4E-5	4E-4
		W, see ^{145}Gd	-	2E+3	1E-6	3E-9	-	-
64	Gadolinium-151	D, see ^{145}Gd	6E+3	4E+2	2E-7	-	9E-5	9E-4
			-	Bone surf (6E+2)	-	9E-10	-	-
		W, see ^{145}Gd	-	1E+3	5E-7	2E-9	-	-
64	Gadolinium-152	D, see ^{145}Gd	2E+1	1E-2	4E-12	-	-	-
			Bone surf (3E+1)	Bone surf (2E-2)	-	3E-14	4E-7	4E-6
		W, see ^{145}Gd	-	4E-2	2E-11	-	-	-
			-	Bone surf (8E-2)	-	1E-13	-	-
64	Gadolinium-153	D, see ^{145}Gd	5E+3	1E+2	6E-8	-	6E-5	6E-4
			-	Bone surf (2E+2)	-	3E-10	-	-
		W, see ^{145}Gd	-	6E+2	2E-7	8E-10	-	-

Tables I, II, and III								
Atomic No.	Radionuclide	Class	Table I Occupational Values			Table II Effluent Concentrations		Table III Releases to Sewers
			Col. 1	Col. 2	Col. 3	Col. 1	Col. 2	Monthly Average Concen-tration (µCi/ml)
			Oral Ingestion ALI (µCi)	Inhalation ALI (µCi)	Inhalation DAC (µCi/ml)	Air (µCi/ml)	Water (µCi/ml)	
64	Gadolinium-159	D, see ^{145}Gd	3E+3	8E+3	3E-6	1E-8	4E-5	4E-4
		W, see ^{145}Gd	-	6E+3	2E-6	8E-9	-	-
65	Terbium-147[2]	W, all compounds	9E+3	3E+4	1E-5	5E-8	1E-4	1E-3
65	Terbium-149	W, all compounds	5E+3	7E+2	3E-7	1E-9	7E-5	7E-4
65	Terbium-150	W, all compounds	5E+3	2E+4	9E-6	3E-8	7E-5	7E-4
65	Terbium-151	W, all compounds	4E+3	9E+3	4E-6	1E-8	5E-5	5E-4
65	Terbium-153	W, all compounds	5E+3	7E+3	3E-6	1E-8	7E-5	7E-4
65	Terbium-154	W, all compounds	2E+3	4E+3	2E-6	6E-9	2E-5	2E-4
65	Terbium-155	W, all compounds	6E+3	8E+3	3E-6	1E-8	8E-5	8E-4
65	Terbium-156m (5.0 h)	W, all compounds	2E+4	3E+4	1E-5	4E-8	2E-4	2E-3
65	Terbium-156m (24.4 h)	W, all compounds	7E+3	8E+3	3E-6	1E-8	1E-4	1E-3
65	Terbium-156	W, all compounds	1E+3	1E+3	6E-7	2E-9	1E-5	1E-4
65	Terbium-157	W, all compounds	5E+4	3E+2	1E-7	-	-	-
			LLI wall (5E+4)	Bone surf (6E+2)	-	8E-10	7E-4	7E-3
65	Terbium-158	W, all compounds	1E+3	2E+1	8E-9	3E-11	2E-5	2E-4
65	Terbium-160	W, all compounds	8E+2	2E+2	9E-8	3E-10	1E-5	1E-4
65	Terbium-161	W, all compounds	2E+3	2E+3	7E-7	2E-9	-	-
			LLI wall (2E+3)	-	-	-	3E-5	3E-4
66	Dysprosium-155	W, all compounds	9E+3	3E+4	1E-5	4E-8	1E-4	1E-3
66	Dysprosium-157	W, all compounds	2E+4	6E+4	3E-5	9E-8	3E-4	3E-3
66	Dysprosium-159	W, all compounds	1E+4	2E+3	1E-6	3E-9	2E-4	2E-3
66	Dysprosium-165	W, all compounds	1E+4	5E+4	2E-5	6E-8	2E-4	2E-3
66	Dysprosium-166	W, all compounds	6E+2	7E+2	3E-7	1E-9	-	-
			LLI wall (8E+2)	-	-	-	1E-5	1E-4
67	Holmium-155[2]	W, all compounds	4E+4	2E+5	6E-5	2E-7	6E-4	6E-3
67	Holmium-157[2]	W, all compounds	3E+5	1E+6	6E-4	2E-6	4E-3	4E-2
67	Holmium-159[2]	W, all compounds	2E+5	1E+6	4E-4	1E-6	3E-3	3E-2
67	Holmium-161	W, all compounds	1E+5	4E+5	2E-4	6E-7	1E-3	1E-2
67	Holmium-162m[2]	W, all compounds	5E+4	3E+5	1E-4	4E-7	7E-4	7E-3
67	Holmium-162[2]	W, all compounds	5E+5	2E+6	1E-3	3E-6	-	-
			St wall (8E+5)	-	-	-	1E-2	1E-1
67	Holmium-164m[2]	W, all compounds	1E+5	3E+5	1E-4	4E-7	1E-3	1E-2
67	Holmium-164[2]	W, all compounds	2E+5	6E+5	3E-4	9E-7	-	-
			St wall (2E+5)	-	-	-	3E-3	3E-2
67	Holmium-166m	W, all compounds	6E+2	7E+0	3E-9	9E-12	9E-6	9E-5
67	Holmium-166	W, all compounds	9E+2	2E+3	7E-7	2E-9	-	-
			LLI wall (9E+2)	-	-	-	1E-5	1E-4
67	Holmium-167	W, all compounds	2E+4	6E+4	2E-5	8E-8	2E-4	2E-3
68	Erbium-161	W, all compounds	2E+4	6E+4	3E-5	9E-8	2E-4	2E-3
68	Erbium-165	W, all compounds	6E+4	2E+5	8E-5	3E-7	9E-4	9E-3
68	Erbium-169	W, all compounds	3E+3	3E+3	1E-6	4E-9	-	-
			LLI wall (4E+3)	-	-	-	5E-5	5E-4
68	Erbium-171	W, all compounds	4E+3	1E+4	4E-6	1E-8	5E-5	5E-4
68	Erbium-172	W, all compounds	1E+3	1E+3	6E-7	2E-9	-	-
			LLI wall (1E+3)	-	-	-	2E-5	2E-4
69	Thulium-162[2]	W, all compounds	7E+4	3E+5	1E-4	4E-7	-	-
			St wall (7E+4)	-	-	-	1E-3	1E-2
69	Thulium-166	W, all compounds	4E+3	1E+4	6E-6	2E-8	6E-5	6E-4

Tables I, II, and III								
Atomic No.	**Radionuclide**	**Class**	**Table I Occupational Values**			**Table II Effluent Concentrations**		**Table III Releases to Sewers**
			Col. 1	**Col. 2**	**Col. 3**	**Col. 1**	**Col. 2**	**Monthly Average Concen-tration (µCi/ml)**
			Oral Ingestion ALI (µCi)	**Inhalation**		**Air (µCi/ml)**	**Water (µCi/ml)**	
				ALI (µCi)	**DAC (µCi/ml)**			
69	Thulium-167	W, all compounds	2E+3	2E+3	8E-7	3E-9	-	-
			LLI wall (2E+3)	-	-	-	3E-5	3E-4
69	Thulium-170	W, all compounds	8E+2	2E+2	9E-8	3E-10	-	-
			LLI wall (1E+3)	-	-	-	1E-5	1E-4
69	Thulium-171	W, all compounds	1E+4	3E+2	1E-7	-	-	-
			LLI wall (1E+4)	Bone surf (6E+2)	-	8E-10	2E-4	2E-3
69	Thulium-172	W, all compounds	7E+2	1E+3	5E-7	2E-9	-	-
			LLI wall (8E+2)	-	-	-	1E-5	1E-4
69	Thulium-173	W, all compounds	4E+3	1E+4	5E-6	2E-8	6E-5	6E-4
69	Thulium-175[2]	W, all compounds	7E+4	3E+5	1E-4	4E-7	-	-
			St wall (9E+4)	-	-	-	1E-3	1E-2
70	Ytterbium-162[2]	W, all compounds except those given for Y	7E+4	3E+5	1E-4	4E-7	1E-3	1E-2
		Y, oxides, hydroxides, and fluorides	-	3E+5	1E-4	4E-7	-	-
70	Ytterbium-166	W, see ^{162}Yb	1E+3	2E+3	8E-7	3E-9	2E-5	2E-4
		Y, see ^{162}Yb	-	2E+3	8E-7	3E-9	-	-
70	Ytterbium-167[2]	W, see ^{162}Yb	3E+5	8E+5	3E-4	1E-6	4E-3	4E-2
		Y, see ^{162}Yb	-	7E+5	3E-4	1E-6	-	-
70	Ytterbium-169	W, see ^{162}Yb	2E+3	8E+2	4E-7	1E-9	2E-5	2E-4
		Y, see ^{162Yb}	-	7E+2	3E-7	1E-9	-	-
70	Ytterbium-175	W, see ^{162}Yb	3E+3	4E+3	1E-6	5E-9	-	-
			LLI wall (3E+3)	-	-	-	4E-5	4E-4
		Y, see ^{162}Yb	-	3E+3	1E-6	5E-9	-	-
70	Ytterbium-177[2]	W, see ^{162}Yb	2E+4	5E+4	2E-5	7E-8	2E-4	2E-3
		Y, see ^{162}Yb	-	5E+4	2E-5	6E-8	-	-
70	Ytterbium-178[2]	W, see ^{162}Yb	1E+4	4E+4	2E-5	6E-8	2E-4	2E-3
		Y, see ^{162}Yb	-	4E+4	2E-5	5E-8	-	-
71	Lutetium-169	W, all compounds except those given for Y	3E+3	4E+3	2E-6	6E-9	3E-5	3E-4
		Y, oxides, hydroxides, and fluorides	-	4E+3	2E-6	6E-9	-	-
71	Lutetium-170	W, see ^{169}Lu	1E+3	2E+3	9E-7	3E-9	2E-5	2E-4
		Y, see ^{169}Lu	-	2E+3	8E-7	3E-9	-	-
71	Lutetium-171	W, see ^{169}Lu	2E+3	2E+3	8E-7	3E-9	3E-5	3E-4
		Y, see ^{169}Lu	-	2E+3	8E-7	3E-9	-	-
71	Lutetium-172	W, see ^{169}Lu	1E+3	1E+3	5E-7	2E-9	1E-5	1E-4
		Y, see ^{169}Lu	-	1E+3	5E-7	2E-9	-	-
71	Lutetium-173	W, see ^{169}Lu	5E+3	3E+2	1E-7	-	7E-5	7E-4
			-	Bone surf (5E+2)	-	6E-10	-	-
		Y, see ^{169}Lu	-	3E+2	1E-7	4E-10	-	-
71	Lutetium-174m	W, see ^{169}Lu	2E+3	2E+2	1E-7	-	-	-
			LLI wall (3E+3)	Bone surf (3E+2)	-	5E-10	4E-5	4E-4
		Y, see ^{169}Lu	-	2E+2	9E-8	3E-10	-	-
71	Lutetium-174	W, see ^{169}Lu	5E+3	1E+2	5E-8	-	7E-5	7E-4
			-	Bone surf (2E+2)	-	3E-10	-	-
		Y, see ^{169}Lu	-	2E+2	6E-8	2E-10	-	-
71	Lutetium-176m	W, see ^{169}Lu	8E+3	3E+4	1E-5	3E-8	1E-4	1E-3
		Y, see ^{169}Lu	-	2E+4	9E-6	3E-8	-	-

Tables I, II, and III								
Atomic No.	Radionuclide	Class	Table I Occupational Values			Table II Effluent Concentrations		Table III Releases to Sewers
			Col. 1	Col. 2	Col. 3	Col. 1	Col. 2	Monthly Average Concen-tration (µCi/ml)
			Oral Ingestion ALI (µCi)	Inhalation ALI (µCi)	Inhalation DAC (µCi/ml)	Air (µCi/ml)	Water (µCi/ml)	
71	Lutetium-176	W, see ^{169}Lu	7E+2	5E+0	2E-9	-	1E-5	1E-4
			-	Bone surf (1E+1)	-	2E-11	-	-
		Y, see ^{169}Lu	-	8E+0	3E-9	1E-11	-	-
71	Lutetium-177m	W, see ^{169}Lu	7E+2	1E+2	5E-8	-	1E-5	1E-4
			-	Bone surf (1E+2)	-	2E-10	-	-
		Y, see ^{169}Lu	-	8E+1	3E-8	1E-10	-	-
71	Lutetium-177	W, see ^{169}Lu	2E+3	2E+3	9E-7	3E-9	-	-
			LLI wall (3E+3)	-	-	-	4E-5	4E-4
		Y, see ^{169}Lu	-	2E+3	9E-7	3E-9	-	-
71	Lutetium-178m[2]	W, see ^{169}Lu	5E+4	2E+5	8E-5	3E-7	-	-
			St. wall (6E+4)	-	-	-	8E-4	8E-3
		Y, see ^{169}Lu	-	2E+5	7E-5	2E-7	-	-
71	Lutetium-178[2]	W, see ^{169}Lu	4E+4	1E+5	5E-5	2E-7	-	-
			St wall (4E+4)	-	-	-	6E-4	6E-3
		Y, see ^{169}Lu	-	1E+5	5E-5	2E-7	-	-
71	Lutetium-179	W, see ^{169}Lu	6E+3	2E+4	8E-6	3E-8	9E-5	9E-4
		Y, see ^{169}Lu	-	2E+4	6E-6	3E-8	-	-
72	Hafnium-170	D, all compounds except those given for W	3E+3	6E+3	2E-6	8E-9	4E-5	4E-4
		W, oxides, hydroxides, carbides, and nitrates	-	5E+3	2E-6	6E-9	-	-
72	Hafnium-172	D, see ^{170}Hf	1E+3	9E+0	4E-9	-	2E-5	2E-4
			-	Bone surf (2E+1)	-	3E-11	-	-
		W, see ^{170}Hf	-	4E+1	2E-8	-	-	-
			-	Bone surf (6E+1)	-	8E-11	-	-
72	Hafnium-173	D, see ^{170}Hf	5E+3	1E+4	5E-6	2E-8	7E-5	7E-4
		W, see ^{170}Hf	-	1E+4	5E-6	2E-8	-	-
72	Hafnium-175	D, see ^{170}Hf	3E+3	9E+2	4E-7	-	4E-5	4E-4
			-	Bone surf (1E+3)	-	1E-9	-	-
		W, see ^{170}Hf	-	1E+3	5E-7	2E-9	-	-
72	Hafnium-177m[2]	D, see ^{170}Hf	2E+4	6E+4	2E-5	8E-8	3E-4	3E-3
		W, see ^{170}Hf	-	9E+4	4E-5	1E-7	-	-
72	Hafnium-178m	D, see ^{170}Hf	3E+2	1E+0	5E-10	-	3E-6	3E-5
			-	Bone surf (2E+0)	-	3E-12	-	-
		W, see ^{170}Hf	-	5E+0	2E-9	-	-	-
			-	Bone surf (9E+0)	-	1E-11	-	-
72	Hafnium-179m	D, see ^{170}Hf	1E+3	3E+2	1E-7	-	1E-5	1E-4
			-	Bone surf (6E+2)	-	8E-10	-	-
		W, see ^{170}Hf	-	6E+2	3E-7	8E-10	-	-
72	Hafnium-180m	D, see ^{170}Hf	7E+3	2E+4	9E-6	3E-8	1E-4	1E-3
		W, see ^{170}Hf	-	3E+4	1E-5	4E-8	-	-
72	Hafnium-181	D, see ^{170}Hf	1E+3	2E+2	7E-8	-	2E-5	2E-4
			-	Bone surf (4E+2)	-	6E-10	-	-
		W, see ^{170}Hf	-	4E+2	2E-7	6E-10	-	-
72	Hafnium-182m[2]	D, see ^{170}Hf	4E+4	9E+4	4E-5	1E-7	5E-4	5E-3
		W, see ^{170}Hf	-	1E+5	6E-5	2E-7	-	-

Tables I, II, and III								
Atomic No.	**Radionuclide**	**Class**	**Table I Occupational Values**			**Table II Effluent Concentrations**		**Table III Releases to Sewers**
			Col. 1	**Col. 2**	**Col. 3**	**Col. 1**	**Col. 2**	**Monthly Average Concen-tration (µCi/ml)**
			Oral Ingestion ALI (µCi)	**Inhalation**		**Air (µCi/ml)**	**Water (µCi/ml)**	
				ALI (µCi)	**DAC (µCi/ml)**			
72	Hafnium-182	D, see ^{170}Hf	2E+2	8E-1	3E-10	-	-	-
			Bone surf (4E+2)	Bone surf (2E+0)	-	2E-12	5E-6	5E-5
		W, see ^{170}Hf	-	3E+0	1E-9	-	-	-
			-	Bone surf (7E+0)	-	1E-11	-	-
72	Hafnium-183[2]	D, see ^{170}Hf	2E+4	5E+4	2E-5	6E-8	3E-4	3E-3
		W, see ^{170}Hf	-	6E+4	2E-5	8E-8	-	-
72	Hafnium-184	D, see ^{170}Hf	2E+3	8E+3	3E-6	1E-8	3E-5	3E-4
		W, see ^{170}Hf	-	6E+3	3E-6	9E-9	-	-
73	Tantalum-172[2]	W, all compounds except those given for Y	4E+4	1E+5	5E-5	2E-7	5E-4	5E-3
		Y, elemental Ta, oxides, hydroxides, halides, carbides, nitrates, and nitrides	-	1E+5	4E-5	1E-7	-	-
73	Tantalum-173	W, see ^{172}Ta	7E+3	2E+4	8E-6	3E-8	9E-5	9E-4
		Y, see ^{172}Ta	-	2E+4	7E-6	2E-8	-	-
73	Tantalum-174[2]	W, see ^{172}Ta	3E+4	1E+5	4E-5	1E-7	4E-4	4E-3
		Y, see ^{172}Ta	-	9E+4	4E-5	1E-7	-	-
73	Tantalum-175	W, see ^{172}Ta	6E+3	2E+4	7E-6	2E-8	8E-5	8E-4
		Y, see ^{172}Ta	-	1E+4	6E-6	2E-8	-	-
73	Tantalum-176	W, see ^{172}Ta	4E+3	1E+4	5E-6	2E-8	5E-5	5E-4
		Y, see ^{172}Ta	-	1E+4	5E-6	2E-8	-	-
73	Tantalum-177	W, see ^{172}Ta	1E+4	2E+4	8E-6	3E-8	2E-4	2E-3
		Y, see ^{172}Ta	-	2E+4	7E-6	2E-8	-	-
73	Tantalum-178	W, see ^{172}Ta	2E+4	9E+4	4E-5	1E-7	2E-4	2E-3
		Y, see ^{172}Ta	-	7E+4	3E-5	1E-7	-	-
73	Tantalum-179	W, see ^{172}Ta	2E+4	5E+3	2E-6	8E-9	3E-4	3E-3
		Y, see ^{172}Ta	-	9E+2	4E-7	1E-9	-	-
73	Tantalum-180m	W, see ^{172}Ta	2E+4	7E+4	3E-5	9E-8	3E-4	3E-3
		Y, see ^{172}Ta	-	6E+4	2E-5	8E-8	-	-
73	Tantalum-180	W, see ^{172}Ta	1E+3	4E+2	2E-7	6E-10	2E-5	2E-4
		Y, see ^{172}Ta	-	2E+1	1E-8	3E-11	-	-
73	Tantalum-182m[2]	W, see ^{172}Ta	2E+5	5E+5	2E-4	8E-7	-	-
			St wall (2E+5)	-	-	-	3E-3	3E-2
		Y, see ^{172}Ta	-	4E+5	2E-4	6E-7	-	-
73	Tantalum-182	W, see ^{172}Ta	8E+2	3E+2	1E-7	5E-10	1E-5	1E-4
		Y, see ^{172}Ta	-	1E+2	6E-8	2E-10	-	-
73	Tantalum-183	W, see ^{172}Ta	9E+2	1E+3	5E-7	2E-9	-	-
			LLI wall (1E+3)	-	-	-	2E-5	2E-4
		Y, see ^{172}Ta	-	1E+3	4E-7	1E-9	-	-
73	Tantalum-184	W, see ^{172}Ta	2E+3	5E+3	2E-6	8E-9	3E-5	3E-4
		Y, see ^{172}Ta	-	5E+3	2E-6	7E-9	-	-
73	Tantalum-185[2]	W, see ^{172}Ta	3E+4	7E+4	3E-5	1E-7	4E-4	4E-3
		Y, see ^{172}Ta	-	6E+4	3E-5	9E-8	-	-
73	Tantalum-186[2]	W, see ^{172}Ta	5E+4	2E+5	1E-4	3E-7	-	-
			St wall (7E+4)	-	-	-	1E-3	1E-2
		Y, see ^{172}Ta	-	2E+5	9E-5	3E-7	-	-
74	Tungsten-176	D, all compounds	1E+4	5E+4	2E-5	7E-8	1E-4	1E-3
74	Tungsten-177	D, all compounds	2E+4	9E+4	4E-5	1E-7	3E-4	3E-3
74	Tungsten-178	D, all compounds	5E+3	2E+4	8E-6	3E-8	7E-5	7E-4
74	Tungsten-179[2]	D, all compounds	5E+5	2E+6	7E-4	2E-6	7E-3	7E-2
74	Tungsten-181	D, all compounds	2E+4	3E+4	1E-5	5E-8	2E-4	2E-3
74	Tungsten-185	D, all compounds	2E+3	7E+3	3E-6	9E-9	-	-
			LLI wall (3E+3)	-	-	-	4E-5	4E-4

Tables I, II, and III								
Atomic No.	**Radionuclide**	**Class**	**Table I Occupational Values**			**Table II Effluent Concentrations**		**Table III Releases to Sewers**
			Col. 1	**Col. 2**	**Col. 3**	**Col. 1**	**Col. 2**	**Monthly Average Concen-tration (µCi/ml)**
			Oral Ingestion ALI (µCi)	**Inhalation**		**Air (µCi/ml)**	**Water (µCi/ml)**	
				ALI (µCi)	**DAC (µCi/ml)**			
74	Tungsten-187	D, all compounds	2E+3	9E+3	4E-6	1E-8	3E-5	3E-4
74	Tungsten-188	D, all compounds	4E+2	1E+3	5E-7	2E-9	-	-
			LLI wall (5E+2)	-	-	-	7E-6	7E-5
75	Rhenium-177[2]	D, all compounds except those given for W	9E+4	3E+5	1E-4	4E-7	-	-
			St wall (1E+5)	-	-	-	2E-3	2E-2
		W, oxides, hydroxides, and nitrates	-	4E+5	1E-4	5E-7	-	-
75	Rhenium-178[2]	D, see ^{177}Re	7E+4	3E+5	1E-4	4E-7	-	-
			St wall (1E+5)	-	-	-	1E-3	1E-2
		W, see ^{177}Re	-	3E+5	1E-4	4E-7	-	-
75	Rhenium-181	D, see ^{177}Re	5E+3	9E+3	4E-6	1E-8	7E-5	7E-4
		W, see ^{177}Re	-	9E+3	4E-6	1E-8	-	-
75	Rhenium-182 (12.7 h)	D, see ^{177}Re	7E+3	1E+4	5E-6	2E-8	9E-5	9E-4
		W, see ^{177}Re	-	2E+4	6E-6	2E-8	-	-
75	Rhenium-182 (64.0 h)	D, see ^{177}Re	1E+3	2E+3	1E-6	3E-9	2E-5	2E-4
		W, see ^{177}Re	-	2E+3	9E-7	3E-9	-	-
75	Rhenium-184m	D, see ^{177}Re	2E+3	3E+3	1E-6	4E-9	3E-5	3E-4
		W, see ^{177}Re	-	4E+2	2E-7	6E-10	-	-
75	Rhenium-184	D, see ^{177}Re	2E+3	4E+3	1E-6	5E-9	3E-5	3E-4
		W, see ^{177}Re	-	1E+3	6E-7	2E-9	-	-
75	Rhenium-186m	D, see ^{177}Re	1E+3	2E+3	7E-7	-	-	-
			St wall (2E+3)	St wall (2E+3)	-	3E-9	2E-5	2E-4
		W, see ^{177}Re	-	2E+2	6E-8	2E-10	-	-
75	Rhenium-186	D, see ^{177}Re	2E+3	3E+3	1E-6	4E-9	3E-5	3E-4
		W, see ^{177}Re	-	2E+3	7E-7	2E-9	-	-
75	Rhenium-187	D, see ^{177}Re	6E+5	8E+5	4E-4	-	8E-3	8E-2
			-	St wall (9E+5)	-	1E-6	-	-
		W, see ^{177}Re	-	1E+5	4E-5	1E-7	-	-
75	Rhenium-188m[2]	D, see ^{177}Re	8E+4	1E+5	6E-5	2E-7	1E-3	1E-2
		W, see ^{177}Re	-	1E+5	6E-5	2E-7	-	-
75	Rhenium-188	D, see ^{177}Re	2E+3	3E+3	1E-6	4E-9	2E-5	2E-4
		W, see ^{177}Re	-	3E+3	1E-6	4E-9	-	-
75	Rhenium-189	D, see ^{177}Re	3E+3	5E+3	2E-6	7E-9	4E-5	4E-4
		W, see ^{177}Re	-	4E+3	2E-6	6E-9	-	-
76	Osmium-180[2]	D, all compounds except those given for W and Y	1E+5	4E+5	2E-4	5E-7	1E-3	1E-2
		W, halides and nitrates	-	5E+5	2E-4	7E-7	-	-
		Y, oxides and hydroxides	-	5E+5	2E-4	6E-7	-	-
76	Osmium-181[2]	D, see ^{180}Os	1E+4	4E+4	2E-5	6E-8	2E-4	2E-3
		W, see ^{180}Os	-	5E+4	2E-5	6E-8	-	-
		Y, see ^{180}Os	-	4E+4	2E-5	6E-8	-	-
76	Osmium-182	D, see ^{180}Os	2E+3	6E+3	2E-6	8E-9	3E-5	3E-4
		W, see ^{180}Os	-	4E+3	2E-6	6E-9	-	-
		Y, see ^{180}Os	-	4E+3	2E-6	6E-9	-	-
76	Osmium-185	D, see ^{180}Os	2E+3	5E+2	2E-7	7E-10	3E-5	3E-4
		W, see ^{180}Os	-	8E+2	3E-7	1E-9	-	-
		Y, see ^{180}Os	-	8E+2	3E-7	1E-9	-	-
76	Osmium-189m	D, see ^{180}Os	8E+4	2E+5	1E-4	3E-7	1E-3	1E-2
		W, see ^{180}Os	-	2E+5	9E-5	3E-7	-	-
		Y, see ^{180}Os	-	2E+5	7E-5	2E-7	-	-

Tables I, II, and III								
Atomic No.	**Radionuclide**	**Class**	**Table I Occupational Values**			**Table II Effluent Concentrations**		**Table III Releases to Sewers**
			Col. 1	**Col. 2**	**Col. 3**	**Col. 1**	**Col. 2**	**Monthly Average Concen-tration (µCi/ml)**
			Oral Ingestion ALI (µCi)	**Inhalation**		**Air (µCi/ml)**	**Water (µCi/ml)**	
				ALI (µCi)	**DAC (µCi/ml)**			
76	Osmium-191m	D, see ^{180}Os	1E+4	3E+4	1E-5	4E-8	2E-4	2E-3
		W, see ^{180}Os	-	2E+4	8E-6	3E-8	-	-
		Y, see ^{180}Os	-	2E+4	7E-6	2E-8	-	-
76	Osmium-191	D, see ^{180}Os	2E+3	2E+3	9E-7	3E-9	-	-
			LLI wall (3E+3)	-	-	-	3E-5	3E-4
		W, see ^{180}Os	-	2E+3	7E-7	2E-9	-	-
		Y, see ^{180}Os	-	1E+3	6E-7	2E-9	-	-
76	Osmium-193	D, see ^{180}Os	2E+3	5E+3	2E-6	6E-9	-	-
			LLI wall (2E+3)	-	-	-	2E-5	2E-4
		W, see ^{180}Os	-	3E+3	1E-6	4E-9	-	-
		Y, see ^{180}Os	-	3E+3	1E-6	4E-9	-	-
76	Osmium-194	D, see ^{180}Os	4E+2	4E+1	2E-8	6E-11	-	-
			LLI wall (6E+2)	-	-	-	8E-6	8E-5
		W, see ^{180}Os	-	6E+1	2E-8	8E-11	-	-
		Y, see ^{180}Os	-	8E+0	3E-9	1E-11	-	-
77	Iridium-182[2]	D, all compounds except those given for W and Y	4E+4	1E+5	6E-5	2E-7	-	-
			St wall (4E+4)	-	-	-	6E-4	6E-3
		W, halides, nitrates, and metallic iridium	-	2E+5	6E-5	2E-7	-	-
		Y, oxides and hydroxides	-	1E+5	5E-5	2E-7	-	-
77	Iridium-184	D, see ^{182}Ir	8E+3	2E+4	1E-5	3E-8	1E-4	1E-3
		W, see ^{182}Ir	-	3E+4	1E-5	5E-8	-	-
		Y, see ^{182}Ir	-	3E+4	1E-5	4E-8	-	-
77	Iridium-185	D, see ^{182}Ir	5E+3	1E+4	5E-6	2E-8	7E-5	7E-4
		W, see ^{182}Ir	-	1E+4	5E-6	2E-8	-	-
		Y, see ^{182}Ir	-	1E+4	4E-6	1E-8	-	-
77	Iridium-186	D, see ^{182}Ir	2E+3	8E+3	3E-6	1E-8	3E-5	3E-4
		W, see ^{182}Ir	-	6E+3	3E-6	9E-9	-	-
		Y, see ^{182}Ir	-	6E+3	2E-6	8E-9	-	-
77	Iridium-187	D, see ^{182}Ir	1E+4	3E+4	1E-5	5E-8	1E-4	1E-3
		W, see ^{182}Ir	-	3E+4	1E-5	4E-8	-	-
		Y, see ^{182}Ir	-	3E+4	1E-5	4E-8	-	-
77	Iridium-188	D, see ^{182}Ir	2E+3	5E+3	2E-6	6E-9	3E-5	3E-4
		W, see ^{182}Ir	-	4E+3	1E-6	5E-9	-	-
		Y, see ^{182}Ir	-	3E+3	1E-6	5E-9	-	-
77	Iridium-189	D, see ^{182}Ir	5E+3	5E+3	2E-6	7E-9	-	-
			LLI wall (5E+3)	-	-	-	7E-5	7E-4
		W, see ^{182}Ir	-	4E+3	2E-6	5E-9	-	-
		Y, see ^{182}Ir	-	4E+3	1E-6	5E-9	-	-
77	Iridium-190m[2]	D, see ^{182}Ir	2E+5	2E+5	8E-5	3E-7	2E-3	2E-2
		W, see ^{182}Ir	-	2E+5	9E-5	3E-7	-	-
		Y, see ^{182}Ir	-	2E+5	8E-5	3E-7	-	-
77	Iridium-190	D, see ^{182}Ir	1E+3	9E+2	4E-7	1E-9	1E-5	1E-4
		W, see ^{182}Ir	-	1E+3	4E-7	1E-9	-	-
		Y, see ^{182}Ir	-	9E+2	4E-7	1E-9	-	-
77	Iridium-192m	D, see ^{182}Ir	3E+3	9E+1	4E-8	1E-10	4E-5	4E-4
		W, see ^{182}Ir	-	2E+2	9E-8	3E-10	-	-
		Y, see ^{182}Ir	-	2E+1	6E-9	2E-11	-	-
77	Iridium-192	D, see ^{182}Ir	9E+2	3E+2	1E-7	4E-10	1E-5	1E-4
		W, see ^{182}Ir	-	4E+2	2E-7	6E-10	-	-
		Y, see ^{182}Ir	-	2E+2	9E-8	3E-10	-	-
77	Iridium-194m	D, see ^{182}Ir	6E+2	9E+1	4E-8	1E-10	9E-6	9E-5
		W, see ^{182}Ir	-	2E+2	7E-8	2E-10	-	-
		Y, see ^{182}Ir	-	1E+2	4E-8	1E-10	-	-

Tables I, II, and III								
Atomic No.	Radionuclide	Class	Table I Occupational Values			Table II Effluent Concentrations		Table III Releases to Sewers
			Col. 1	Col. 2	Col. 3	Col. 1	Col. 2	Monthly Average Concen-tration (µCi/ml)
			Oral Ingestion ALI (µCi)	Inhalation ALI (µCi)	Inhalation DAC (µCi/ml)	Air (µCi/ml)	Water (µCi/ml)	
77	Iridium-194	D, see ^{182}Ir	1E+3	3E+3	1E-6	4E-9	1E-5	1E-4
		W, see ^{182}Ir	-	2E+3	9E-7	3E-9	-	-
		Y, see ^{182}Ir	-	2E+3	8E-7	3E-9	-	-
77	Iridium-195m	D, see ^{182}Ir	8E+3	2E+4	1E-5	3E-8	1E-4	1E-3
		W, see ^{182}Ir	-	3E+4	1E-5	4E-8	-	-
		Y, see ^{182}Ir	-	2E+4	9E-6	3E-8	-	-
77	Iridium-195	D, see ^{182}Ir	1E+4	4E+4	2E-5	6E-8	2E-4	2E-3
		W, see ^{182}Ir	-	5E+4	2E-5	7E-8	-	-
		Y, see ^{182}Ir	-	4E+4	2E-5	6E-8	-	-
78	Platinum-186	D, all compounds	1E+4	4E+4	2E-5	5E-8	2E-4	2E-3
78	Platinum-188	D, all compounds	2E+3	2E+3	7E-7	2E-9	2E-5	2E-4
78	Platinum-189	D, all compounds	1E+4	3E+4	1E-5	4E-8	1E-4	1E-3
78	Platinum-191	D, all compounds	4E+3	8E+3	4E-6	1E-8	5E-5	5E-4
78	Platinum-193m	D, all compounds	3E+3	6E+3	3E-6	8E-9	-	-
			LLI wall (3E+4)	-	-	-	4E-5	4E-4
78	Platinum-193	D, all compounds	4E+4	2E+4	1E-5	3E-8	-	-
			LLI wall (5E+4)	-	-	-	6E-4	6E-3
78	Platinum-195m	D, all compounds	2E+3	4E+3	2E-6	6E-9	-	-
			LLI wall (2E+3)	-	-	-	3E-5	3E-4
78	Platinum-197m[2]	D, all compounds	2E+4	4E+4	2E-5	6E-8	2E-4	2E-3
78	Platinum-197	D, all compounds	3E+3	1E+4	4E-6	1E-8	4E-5	4E-4
78	Platinum-199[2]	D, all compounds	5E+4	1E+5	6E-5	2E-7	7E-4	7E-3
78	Platinum-200	D, all compounds	1E+3	3E+3	1E-6	5E-9	2E-5	2E-4
79	Gold-193	D, all compounds except those given for W and Y	9E+3	3E+4	1E-5	4E-8	1E-4	1E-3
		W, halides and nitrates	-	2E+4	9E-6	3E-8	-	-
		Y, oxides and hydroxides	-	2E+4	8E-6	3E-8	-	-
79	Gold-194	D, see ^{193}Au	3E+3	8E+3	3E-6	1E-8	4E-5	4E-4
		W, see ^{193}Au	-	5E+3	2E-6	8E-9	-	-
		Y, see ^{193}Au	-	5E+3	2E-6	7E-9	-	-
79	Gold-195	D, see ^{193}Au	5E+3	1E+4	5E-6	2E-8	7E-5	7E-4
		W, see ^{193}Au	-	1E+3	6E-7	2E-9	-	-
		Y, see ^{193}Au	-	4E+2	2E-7	6E-10	-	-
79	Gold-198m	D, see ^{193}Au	1E+3	3E+3	1E-6	4E-9	1E-5	1E-4
		W, see ^{193}Au	-	1E+3	5E-7	2E-9	-	-
		Y, see ^{193}Au	-	1E+3	5E-7	2E-9	-	-
79	Gold-198	D, see ^{193}Au	1E+3	4E+3	2E-6	5E-9	2E-5	2E-4
		W, see ^{193}Au	-	2E+3	8E-7	3E-9	-	-
		Y, see ^{193}Au	-	2E+3	7E-7	2E-9	-	-
79	Gold-199	D, see ^{193}Au	3E+3	9E+3	4E-6	1E-8	-	-
			LLI wall (3E+3)	-	-	-	4E-5	4E-4
		W, see ^{193}Au	-	4E+3	2E-6	6E-9	-	-
		Y, see ^{193}Au	-	4E+3	2E-6	5E-9	-	-
79	Gold-200m	D, see ^{193}Au	1E+3	4E+3	1E-6	5E-9	2E-5	2E-4
		W, see ^{193}Au	-	3E+3	1E-6	4E-9	-	-
		Y, see ^{193}Au	-	2E+4	1E-6	3E-9	-	-
79	Gold-200[2]	D, see ^{193}Au	3E+4	6E+4	3E-5	9E-8	4E-4	4E-3
		W, see ^{193}Au	-	8E+4	3E-5	1E-7	-	-
		Y, see ^{193}Au	-	7E+4	3E-5	1E-7	-	-
79	Gold-201[2]	D, see ^{193}Au	7E+4	2E+5	9E-5	3E-7	-	-
			St wall (9E+4)	-	-	-	1E-3	1E-2
		W, see ^{193}Au	-	2E+5	1E-4	3E-7	-	-
		Y, see ^{193}Au	-	2E+5	9E-5	3E-7	-	-

Tables I, II, and III								
Atomic No.	Radionuclide	Class	Table I Occupational Values			Table II Effluent Concentrations		Table III Releases to Sewers
			Col. 1	Col. 2	Col. 3	Col. 1	Col. 2	Monthly Average Concen-tration (µCi/ml)
			Oral Ingestion ALI (µCi)	Inhalation ALI (µCi)	Inhalation DAC (µCi/ml)	Air (µCi/ml)	Water (µCi/ml)	
80	Mercury-193m	Vapor	-	8E+3	4E-6	1E-8	-	-
		Organic D	4E+3	1E+4	5E-6	2E-8	6E-5	6E-4
		D, sulfates	3E+3	9E+3	4E-6	1E-8	4E-5	4E-4
		W, oxides, hydroxides, halides, nitrates, and sulfides	-	8E+3	3E-6	1E-8	-	-
80	Mercury-193	Vapor	-	3E+4	1E-5	4E-8	-	-
		Organic D	2E+4	6E+4	3E-5	9E-8	3E-4	3E-3
		D, see ^{193m}Hg	2E+4	4E+4	2E-5	6E-8	2E-4	2E-3
		W, see ^{193m}Hg	-	4E+4	2E-5	6E-8	-	-
80	Mercury-194	Vapor	-	3E+1	1E-8	4E-11	-	-
		Organic D	2E+1	3E+1	1E-8	4E-11	2E-7	2E-6
		D, see ^{193m}Hg	8E+2	4E+1	2E-8	6E-11	1E-5	1E-4
		W, see ^{193m}Hg	-	1E+2	5E-8	2E-10	-	-
80	Mercury-195m	Vapor	-	4E+3	2E-6	6E-9	-	-
		Organic D	3E+3	6E+3	3E-6	8E-9	4E-5	4E-4
		D, see ^{193m}Hg	2E+3	5E+3	2E-6	7E-9	3E-5	3E-4
		W, see ^{193m}Hg	-	4E+3	2E-6	5E-9	-	-
80	Mercury-195	Vapor	-	3E+4	1E-5	4E-8	-	-
		Organic D	2E+4	5E+4	2E-5	6E-8	2E-4	2E-3
		D, see ^{193m}Hg	1E+4	4E+4	1E-5	5E-8	2E-4	2E-3
		W, see ^{193m}Hg	-	3E+4	1E-5	5E-8	-	-
80	Mercury-197m	Vapor	-	5E+3	2E-6	7E-9	-	-
		Organic D	4E+3	9E+3	4E-6	1E-8	5E-5	5E-4
		D, see ^{193m}Hg	3E+3	7E+3	3E-6	1E-8	4E-5	4E-4
		W, see ^{193m}Hg	-	5E+3	2E-6	7E-9	-	-
80	Mercury-197	Vapor	-	8E+3	4E-6	1E-8	-	-
		Organic D	7E+3	1E+4	6E-6	2E-8	9E-5	9E-4
		D, see ^{193m}Hg	6E+3	1E+4	5E-6	2E-8	8E-5	8E-4
		W, see ^{193m}Hg	-	9E+3	4E-6	1E-8	-	-
80	Mercury-199m[2]	Vapor	-	8E+4	3E-5	1E-7	-	-
		Organic D	6E+4	2E+5	7E-5	2E-7	-	-
			St wall (1E+5)	-	-	-	1E-3	1E-2
		D, see ^{193m}Hg	6E+4	1E+5	6E-5	2E-7	8E-4	8E-3
		W, see ^{193m}Hg	-	2E+5	7E-5	2E-7	-	-
80	Mercury-203	Vapor	-	8E+2	4E-7	1E-9	-	-
		Organic D	5E+2	8E+2	3E-7	1E-9	7E-6	7E-5
		D, see ^{193m}Hg	2E+3	1E+3	5E-7	2E-9	3E-5	3E-4
		W, see ^{193m}Hg	-	1E+3	5E-7	2E-9	-	-
81	Thallium-194m[2]	D, all compounds	5E+4	2E+5	6E-5	2E-7	-	-
			St wall (7E+4)	-	-	-	1E-3	1E-2
81	Thallium-194[2]	D, all compounds	3E+5	6E+5	2E-4	8E-7	-	-
			St wall (3E+5)	-	-	-	4E-3	4E-2
81	Thallium-195[2]	D, all compounds	6E+4	1E+5	5E-5	2E-7	9E-4	9E-3
81	Thallium-197	D, all compounds	7E+4	1E+5	5E-5	2E-7	1E-3	1E-2
81	Thallium-198m[2]	D, all compounds	3E+4	5E+4	2E-5	8E-8	4E-4	4E-3
81	Thallium-198	D, all compounds	2E+4	3E+4	1E-5	5E-8	3E-4	3E-3
81	Thallium-199	D, all compounds	6E+4	8E+4	4E-5	1E-7	9E-4	9E-3
81	Thallium-200	D, all compounds	8E+3	1E+4	5E-6	2E-8	1E-4	1E-3
81	Thallium-201	D, all compounds	2E+4	2E+4	9E-6	3E-8	2E-4	2E-3
81	Thallium-202	D, all compounds	4E+3	5E+3	2E-6	7E-9	5E-5	5E-4
81	Thallium-204	D, all compounds	2E+3	2E+3	9E-7	3E-9	2E-5	2E-4
82	Lead-195m[2]	D, all compounds	6E+4	2E+5	8E-5	3E-7	8E-4	8E-3
82	Lead-198	D, all compounds	3E+4	6E+4	3E-5	9E-8	4E-4	4E-3
82	Lead-199[2]	D, all compounds	2E+4	7E+4	3E-5	1E-7	3E-4	3E-3
82	Lead-200	D, all compounds	3E+3	6E+3	3E-6	9E-9	4E-5	4E-4
82	Lead-201	D, all compounds	7E+3	2E+4	8E-6	3E-8	1E-4	1E-3
82	Lead-202m	D, all compounds	9E+3	3E+4	1E-5	4E-8	1E-4	1E-3

Tables I, II, and III								
Atomic No.	Radionuclide	Class	Table I Occupational Values			Table II Effluent Concentrations		Table III Releases to Sewers
			Col. 1	Col. 2	Col. 3	Col. 1	Col. 2	Monthly Average Concen-tration (µCi/ml)
			Oral Ingestion ALI (µCi)	Inhalation ALI (µCi)	Inhalation DAC (µCi/ml)	Air (µCi/ml)	Water (µCi/ml)	
82	Lead-202	D, all compounds	1E+2	5E+1	2E-8	7E-11	2E-6	2E-5
82	Lead-203	D, all compounds	5E+3	9E+3	4E-6	1E-8	7E-5	7E-4
82	Lead-205	D, all compounds	4E+3	1E+3	6E-7	2E-9	5E-5	5E-4
82	Lead-209	D, all compounds	2E+4	6E+4	2E-5	8E-8	3E-4	3E-3
82	Lead-210	D, all compounds	6E-1	2E-1	1E-10	-	-	-
			Bone surf (1E+0)	Bone surf (4E-1)	-	6E-13	1E-8	1E-7
82	Lead-211[2]	D, all compounds	1E+4	6E+2	3E-7	9E-10	2E-4	2E-3
82	Lead-212	D, all compounds	8E+1	3E+1	1E-8	5E-11	-	-
			Bone surf (1E+2)	-	-	-	2E-6	2E-5
82	Lead-214[2]	D, all compounds	9E+3	8E+2	3E-7	1E-9	1E-4	1E-3
83	Bismuth-200[2]	D, nitrates	3E+4	8E+4	4E-5	1E-7	4E-4	4E-3
		W, all other compounds	-	1E+5	4E-5	1E-7	-	-
83	Bismuth-201[2]	D, see ^{200}Bi	1E+4	3E+4	1E-5	4E-8	2E-4	2E-3
		W, see ^{200}Bi	-	4E+4	2E-5	5E-8	-	-
83	Bismuth-202[2]	D, see ^{200}Bi	1E+4	4E+4	2E-5	6E-8	2E-4	2E-3
		W, see ^{200}Bi	-	8E+4	3E-5	1E-7	-	-
83	Bismuth-203	D, see ^{200}Bi	2E+3	7E+3	3E-6	9E-9	3E-5	3E-4
		W, see ^{200}Bi	-	6E+3	3E-6	9E-9	-	-
83	Bismuth-205	D, see ^{200}Bi	1E+3	3E+3	1E-6	3E-9	2E-5	2E-4
		W, see ^{200}Bi	-	1E+3	5E-7	2E-9	-	-
83	Bismuth-206	D, see ^{200}Bi	6E+2	1E+3	6E-7	2E-9	9E-6	9E-5
		W, see ^{200}Bi	-	9E+2	4E-7	1E-9	-	-
83	Bismuth-207	D, see ^{200}Bi	1E+3	2E+3	7E-7	2E-9	1E-5	1E-4
		W, see ^{200}Bi	-	4E+2	1E-7	5E-10	-	-
83	Bismuth-210m	D, see ^{200}Bi	4E+1	5E+0	2E-9	-	-	-
			Kidneys (6E+1)	Kidneys (6E+0)	-	9E-12	8E-7	8E-6
		W, see ^{200}Bi	-	7E-1	3E-10	9E-13	-	-
83	Bismuth-210	D, see ^{200}Bi	8E+2	2E+2	1E-7	-	1E-5	1E-4
			-	Kidneys (4E+2)	-	5E-10	-	-
		W, see ^{200}Bi	-	3E+1	1E-8	4E-11	-	-
83	Bismuth-212[2]	D, see ^{200}Bi	5E+3	2E+2	1E-7	3E-10	7E-5	7E-4
		W, see ^{200}Bi	-	3E+2	1E-7	4E-10	-	-
83	Bismuth-213[2]	D, see ^{200}Bi	7E+3	3E+2	1E-7	4E-10	1E-4	1E-3
		W, see ^{200}Bi	-	4E+2	1E-7	5E-10	-	-
83	Bismuth-214[2]	D, see ^{200}Bi	2E+4	8E+2	3E-7	1E-9	-	-
			St wall (2E+4)	-	-	-	3E-4	3E-3
		W, see ^{200}Bi	-	9E-2	4E-7	1E-9	-	-
84	Polonium-203[2]	D, all compounds except those given for W	3E+4	6E+4	3E-5	9E-8	3E-4	3E-3
		W, oxides, hydroxides, and nitrates	-	9E+4	4E-5	1E-7	-	-
84	Polonium-205[2]	D, see ^{203}Po	2E+4	4E+4	2E-5	5E-8	3E-4	3E-3
		W, see ^{203}Po	-	7E+4	3E-5	1E-7	-	-
84	Polonium-207	D, see ^{203}Po	8E+3	3E+4	1E-5	3E-8	1E-4	1E-3
		W, see ^{203}Po	-	3E+4	1E-5	4E-8	-	-
84	Polonium-210	D, see ^{203}Po	3E+0	6E-1	3E-10	9E-13	4E-8	4E-7
		W, see ^{203}Po	-	6E-1	3E-10	9E-13	-	-
85	Astatine-207[2]	D, halides	6E+3	3E+3	1E-6	4E-9	8E-5	8E-4
		W	-	2E+3	9E-7	3E-9	-	-
85	Astatine-211	D, halides	1E+2	8E+1	3E-8	1E-10	2E-6	2E-5
		W	-	5E+1	2E-8	8E-11	-	-

Tables I, II, and III								
Atomic No.	**Radionuclide**	**Class**	**Table I Occupational Values**			**Table II Effluent Concentrations**		**Table III Releases to Sewers**
			Col. 1	**Col. 2**	**Col. 3**	**Col. 1**	**Col. 2**	**Monthly Average Concen-tration (µCi/ml)**
			Oral Ingestion ALI (µCi)	**Inhalation**		**Air (µCi/ml)**	**Water (µCi/ml)**	
				ALI (µCi)	**DAC (µCi/ml)**			
86	Radon-220	With daughters removed	-	2E+4	7E-6	2E-8	-	-
		With daughters present	-	2E+1	9E-9	3E-11	-	-
				(or 12 working level months)		(or 1.0 working level)		
86	Radon-222	With daughters removed	-	1E+4	4E-6	1E-8	-	-
		With daughters present	-	1E+2	3E-8	1E-10	-	-
				(or 4 working level months)		(or 0.33 working level)		
87	Francium-222[2]	D, all compounds	2E+3	5E+2	2E-7	6E-10	3E-5	3E-4
87	Francium-223[2]	D, all compounds	6E+2	8E+2	3E-7	1E-9	8E-6	8E-5
88	Radium-223	W, all compounds	5E+0	7E-1	3E-10	9E-13	-	-
			Bone surf (9E+0)	-	-	-	1E-7	1E-6
88	Radium-224	W, all compounds	8E+0	2E+0	7E-10	2E-12	-	-
			Bone surf (2E+1)	-	-	-	2E-7	2E-6
88	Radium-225	W, all compounds	8E+0	7E-1	3E-10	9E-13	-	-
			Bone surf (2E+1)	-	-	-	2E-7	2E-6
88	Radium-226	W, all compounds	2E+0	6E-1	3E-10	9E-13	-	-
			Bone surf (5E+0)	-	-	-	6E-8	6E-7
88	Radium-227[2]	W, all compounds	2E+4	1E+4	6E-6	-	-	-
			Bone surf (2E+4)	Bone surf (2E+4)	-	3E-8	3E-4	3E-3
88	Radium-228	W, all compounds	2E+0	1E+0	5E-10	2E-12	-	-
			Bone surf (4E+0)	-	-	-	6E-8	6E-7
89	Actinium-224	D, all compounds except those given for W and Y	2E+3	3E+1	1E-8	-	-	-
			LLI wall (2E+3)	Bone surf (4E+1)	-	5E-11	3E-5	3E-4
		W, halides and nitrates	-	5E+1	2E-8	7E-11	-	-
		Y, oxides and hydroxides	-	5E+1	2E-8	6E-11	-	-
89	Actinium-225	D, see ^{224}Ac	5E+1	3E-1	1E-10	-	-	-
			LLI wall (5E+1)	Bone surf (5E-1)	-	7E-13	7E-7	7E-6
		W, see ^{224}Ac	-	6E-1	3E-10	9E-13	-	-
		Y, see ^{224}Ac	-	6E-1	3E-10	9E-13	-	-
89	Actinium-226	D, see ^{224}Ac	1E+2	3E+0	1E-9	-	-	-
			LLI wall (1E+2)	Bone surf (4E+0)	-	5E-12	2E-6	2E-5
		W, see ^{224}Ac	-	5E+0	2E-9	7E-12	-	-
		Y, see ^{224}Ac	-	5E+0	2E-9	6E-12	-	-
89	Actinium-227	D, see ^{224}Ac	2E-1	4E-4	2E-13	-	-	-
			Bone surf (4E-1)	Bone surf (8E-4)	-	1E-15	5E-9	5E-8
		W, see ^{224}Ac	-	2E-3	7E-13	-	-	-
			-	Bone surf (3E-3)	-	4E-15	-	-
		Y, see ^{224}Ac	-	4E-3	2E-12	6E-15	-	-
89	Actinium-228	D, see ^{224}Ac	2E+3	9E+0	4E-9	-	3E-5	3E-4
			-	Bone surf (2E+1)	-	2E-11	-	-
		W, see ^{224}Ac	-	4E+1	2E-8	-	-	-
			-	Bone surf (6E+1)	-	8E-11	-	-
		Y, see ^{224}Ac	-	4E+1	2E-8	6E-11	-	-

Tables I, II, and III								
Atomic No.	**Radionuclide**	**Class**	**Table I Occupational Values**			**Table II Effluent Concentrations**		**Table III Releases to Sewers**
			Col. 1	**Col. 2**	**Col. 3**	**Col. 1**	**Col. 2**	**Monthly Average Concen-tration (µCi/ml)**
			Oral Ingestion ALI (µCi)	**Inhalation**		**Air (µCi/ml)**	**Water (µCi/ml)**	
				ALI (µCi)	**DAC (µCi/ml)**			
90	Thorium-226[2]	W, all compounds except those given for Y	5E+3	2E+2	6E-8	2E-10	-	-
			St wall (5E+3)	-	-	-	7E-5	7E-4
		Y, oxides and hydroxides	-	1E+2	6E-8	2E-10	-	-
90	Thorium-227	W, see ^{226}Th	1E+2	3E-1	1E-10	5E-13	2E-6	2E-5
		Y, see ^{226}Th	-	3E-1	1E-10	5E-13	-	-
90	Thorium-228	W, see ^{226}Th	6E+0	1E-2	4E-12	-	-	-
			Bone surf (1E+1)	Bone surf (2E-2)	-	3E-14	2E-7	2E-6
		Y, see ^{226}Th	-	2E-2	7E-12	2E-14	-	-
90	Thorium-229	W, see ^{226}Th	6E-1	9E-4	4E-13	-	-	-
			Bone surf (1E+0)	Bone surf (2E-3)	-	3E-15	2E-8	2E-7
		Y, see ^{226}Th	-	2E-3	1E-12	-	-	-
			-	Bone surf (3E-3)	-	4E-15	-	-
90	Thorium-230	W, see ^{226}Th	4E+0	6E-3	3E-12	-	-	-
			Bone surf (9E+0)	Bone surf (2E-2)	-	2E-14	1E-7	1E-6
		Y, see ^{226}Th	-	2E-2	6E-12	-	-	-
			-	Bone surf (2E-2)	-	3E-14	-	-
90	Thorium-231	W, see ^{226}Th	4E+3	6E+3	3E-6	9E-9	5E-5	5E-4
		Y, see ^{226}Th	-	6E+3	3E-6	9E-9	-	-
90	Thorium-232	W, see ^{226}Th	7E-1	1E-3	5E-13	-	-	-
			Bone surf (2E+0)	Bone surf (3E-3)	-	4E-15	3E-8	3E-7
		Y, see ^{226}Th	-	3E-3	1E-12	-	-	-
			-	Bone surf (4E-3)	-	6E-15	-	-
90	Thorium-234	W, see ^{226}Th	3E+2	2E+2	8E-8	3E-10	-	-
			LLI wall (4E+2)	-	-	-	5E-6	5E-5
		Y, see ^{226}Th	-	2E+2	6E-8	2E-10	-	-
91	Protactinium-227[2]	W, all compounds except those given for Y	4E+3	1E+2	5E-8	2E-10	5E-5	5E-4
		Y, oxides and hydroxides	-	1E+2	4E-8	1E-10	-	-
91	Protactinium-228	W, see ^{227}Pa	1E+3	1E+1	5E-9	-	2E-5	2E-4
			-	Bone surf (2E+1)	-	3E-11	-	-
		Y, see ^{227}Pa	-	1E+1	5E-9	2E-11	-	-
91	Protactinium-230	W, see ^{227}Pa	6E+2	5E+0	2E-9	7E-12	-	-
			Bone surf (9E+2)	-	-	-	1E-5	1E-4
		Y, see ^{227}Pa	-	4E+0	1E-9	5E-12	-	-
91	Protactinium-231	W, see ^{227}Pa	2E-1	2E-3	6E-13	-	-	-
			Bone surf (5E-1)	Bone surf (4E-3)	-	6E-15	6E-9	6E-8
		Y, see ^{227}Pa	-	4E-3	2E-12	-	-	-
			-	Bone surf (6E-3)	-	8E-15	-	-
91	Protactinium-232	W, see ^{227}Pa	1E+3	2E+1	9E-9	-	2E-5	2E-4
			-	Bone surf (6E+1)	-	8E-11	-	-
		Y, see ^{227}Pa	-	6E+1	2E-8	-	-	-
			-	Bone surf (7E+1)	-	1E-10	-	-

Tables I, II, and III								
Atomic No.	**Radionuclide**	**Class**	**Table I Occupational Values**			**Table II Effluent Concentrations**		**Table III Releases to Sewers**
			Col. 1	**Col. 2**	**Col. 3**	**Col. 1**	**Col. 2**	**Monthly Average Concen-tration (µCi/ml)**
			Oral Ingestion ALI (µCi)	**Inhalation**		**Air (µCi/ml)**	**Water (µCi/ml)**	
				ALI (µCi)	**DAC (µCi/ml)**			
91	Protactinium-233	W, see ^{227}Pa	1E+3	7E+2	3E-7	1E-9	-	-
			LLI wall (2E+3)	-	-	-	2E-5	2E-4
		Y, see ^{227}Pa	-	6E+2	2E-7	8E-10	-	-
91	Protactinium-234	W, see ^{227}Pa	2E+3	8E+3	3E-6	1E-8	3E-5	3E-4
		Y, see ^{227}Pa	-	7E+3	3E-6	9E-9	-	-
92	Uranium-230	D, UF_6, UO_2F_2, $UO_2(NO_3)_2$	4E+0	4E-1	2E-10	-	-	-
			Bone surf (6E+0)	Bone surf (6E-1)	-	8E-13	8E-8	8E-7
		W, UO_3, UF_4, UC_{l4}	-	4E-1	1E-10	5E-13	-	-
		Y, UO_2, U_3O_8	-	3E-1	1E-10	4E-13	-	-
92	Uranium-231	D, see ^{230}U	5E+3	8E+3	3E-6	1E-8	-	-
			LLI wall (4E+3)	-	-	-	6E-5	6E-4
		W, see ^{230}U	-	6E+3	2E-6	8E-9	-	-
		Y, see ^{230}U	-	5E+3	2E-6	6E-9	-	-
92	Uranium-232	D, see ^{230}U	2E+0	2E-1	9E-11	-	-	-
			Bone surf (4E+0)	Bone surf (4E-1)	-	6E-13	6E-8	6E-7
		W, see ^{230}U	-	4E-1	2E-10	5E-13	-	-
		Y, see ^{230}U	-	8E-3	3E-12	1E-14	-	-
92	Uranium-233	D, see ^{230}U	1E+1	1E+0	5E-10	-	-	-
			Bone surf (2E+1)	Bone surf (2E+0)	-	3E-12	3E-7	3E-6
		W, see ^{230}U	-	7E-1	3E-10	1E-12	-	-
		Y, see ^{230}U	-	4E-2	2E-11	5E-14	-	-
92	Uranium-234[3]	D, see ^{230}U	1E+1	1E+0	5E-10	-	-	-
			Bone surf (2E+1)	Bone surf (2E+0)	-	3E-12	3E-7	3E-6
		W, see ^{230}U	-	7E-1	3E-10	1E-12	-	-
		Y, see ^{230}U	-	4E-2	2E-11	5E-14	-	-
92	Uranium-235[3]	D, see ^{230}U	1E+1	1E+0	6E-10	-	-	-
			Bone surf (2E+1)	Bone surf (2E+0)	-	3E-12	3E-7	3E-6
		W, see ^{230}U	-	8E-1	3E-10	1E-12	-	-
		Y, see ^{230}U	-	4E-2	2E-11	6E-14	-	-
92	Uranium-236	D, see ^{230}U	1E+1	1E+0	5E-10	-	-	-
			Bone surf (2E+1)	Bone surf (2E+0)	-	3E-12	3E-7	3E-6
		W, see ^{230}U	-	8E-1	3E-10	1E-12	-	-
		Y, see ^{230}U	-	4E-2	2E-11	6E-14	-	-
92	Uranium-237	D, see ^{230}U	2E+3	3E+3	1E-6	4E-9	-	-
			LLI wall (2E+3)	-	-	-	3E-5	3E-4
		W, see ^{230}U	-	2E+3	7E-7	2E-9	-	-
		Y, see ^{230}U	-	2E+3	6E-7	2E-9	-	-
92	Uranium-238[3]	D, see ^{230}U	1E+1	1E+0	6E-10	-	-	-
			Bone surf (2E+1)	Bone surf (2E+0)	-	3E-12	3E-7	3E-6
		W, see ^{230}U	-	8E-1	3E-10	1E-12	-	-
		Y, see ^{230}U	-	4E-2	2E-11	6E-14	-	-
92	Uranium-239[2]	D, see ^{230}U	7E+4	2E+5	8E-5	3E-7	9E-4	9E-3
		W, see ^{230}U	-	2E+5	7E-5	2E-7	-	-
		Y, see ^{230}U	-	2E+5	6E-5	2E-7	-	-
92	Uranium-240	D, see ^{230}U	1E+3	4E+3	2E-6	5E-9	2E-5	2E-4
		W, see ^{230}U	-	3E+3	1E-6	4E-9	-	-
		Y, see ^{230}U	-	2E+3	1E-6	3E-9	-	-

Tables I, II, and III								
Atomic No.	Radionuclide	Class	Table I Occupational Values			Table II Effluent Concentrations		Table III Releases to Sewers
			Col. 1	Col. 2	Col. 3	Col. 1	Col. 2	Monthly Average Concen-tration (µCi/ml)
			Oral Ingestion ALI (µCi)	Inhalation ALI (µCi)	Inhalation DAC (µCi/ml)	Air (µCi/ml)	Water (µCi/ml)	
92	Uranium-natural[3]	D, see ^{230}U	1E+1	1E+0	5E-10	-	-	-
			Bone surf (2E+1)	Bone surf (2E+0)	-	3E-12	3E-7	3E-6
		W, see ^{230}U	-	8E-1	3E-10	9E-13	-	-
		Y, see ^{230}U	-	5E-2	2E-11	9E-14	-	-
93	Neptunium-232[2]	W, all compounds	1E+5	2E+3	7E-7	-	2E-3	2E-2
			-	Bone surf (5E+2)	-	6E-9	-	-
93	Neptunium-233[2]	W, all compounds	8E+5	3E+6	1E-3	4E-6	1E-2	1E-1
93	Neptunium-234	W, all compounds	2E+3	3E+3	1E-6	4E-9	3E-5	3E-4
93	Neptunium-235	W, all compounds	2E+4	8E+2	3E-7	-	-	-
			LLI wall (2E+4)	Bone surf (1E+3)	-	2E-9	3E-4	3E-3
93	Neptunium-236 (1.15E+5 y)	W, all compounds	3E+0	2E-2	9E-12	-	-	-
			Bone surf (6E+0)	Bone surf (5E-2)	-	8E-14	9E-8	9E-7
93	Neptunium-236m (22.5 h)	W, all compounds	3E+3	3E+1	1E-8	-	-	-
			Bone surf (4E+3)	Bone surf (7E+1)	-	1E-10	5E-5	5E-4
93	Neptunium-237	W, all compounds	5E-1	4E-3	2E-12	-	-	-
			Bone surf (1E+0)	Bone surf (1E-2)	-	1E-14	2E-8	2E-7
93	Neptunium-238	W, all compounds	1E+3	6E+1	3E-8	-	2E-5	2E-4
			-	Bone surf (2E+2)	-	2E-10	-	-
93	Neptunium-239	W, all compounds	2E+3	2E+3	9E-7	3E-9	-	-
			LLI wall (2E+3)	-	-	-	2E-5	2E-4
93	Neptunium-240[2]	W, all compounds	2E+4	8E+4	3E-5	1E-7	3E-4	3E-3
94	Plutonium-234	W, all compounds except PuO_2	8E+3	2E+2	9E-8	3E-10	1E-4	1E-3
		Y, PuO_2	-	2E+2	8E-8	3E-10	-	-
94	Plutonium-235[2]	W, see ^{234}Pu	9E+5	3E+6	1E-3	4E-6	1E-2	1E-1
		Y, see ^{234}Pu	-	3E+6	1E-3	3E-6	-	-
94	Plutonium-236	W, see ^{234}Pu	2E+0	2E-2	8E-12	-	-	-
			Bone surf (4E+0)	Bone surf (4E-2)	-	5E-14	6E-8	6E-7
		Y, see ^{234}Pu	-	4E-2	2E-11	6E-14	-	-
94	Plutonium-237	W, see ^{234}Pu	1E+4	3E+3	1E-6	5E-9	2E-4	2E-3
		Y, see ^{234}Pu	-	3E+3	1E-6	4E-9	-	-
94	Plutonium-238	W, see ^{234}Pu	9E-1	7E-3	3E-12	-	-	-
			Bone surf (2E+0)	Bone surf (1E-2)	-	2E-14	2E-8	2E-7
		Y, see ^{234}Pu	-	2E-2	8E-12	2E-14	-	-
94	Plutonium-239	W, see ^{234}Pu	8E-1	6E-3	3E-12	-	-	-
			Bone surf (1E+0)	Bone surf (1E-2)	-	2E-14	2E-8	2E-7
		Y, see ^{234}Pu	-	2E-2	7E-12	-	-	-
			-	Bone surf (2E-2)	-	2E-14	-	-
94	Plutonium-240	W, see ^{234}Pu	8E-1	6E-3	3E-12	-	-	-
			Bone surf (1E+0)	Bone surf (1E-2)	-	2E-14	2E-8	2E-7
		Y, see ^{234}Pu	-	2E-2	7E-12	-	-	-
			-	Bone surf (2E-2)	-	2E-14	-	-
94	Plutonium-241	W, see ^{234}Pu	4E+1	3E-1	1E-10	-	-	-
			Bone surf (7E+1)	Bone surf (6E-1)	-	8E-13	1E-6	1E-5
		Y, see ^{234}Pu	-	8E-1	3E-10	-	-	-
			-	Bone surf (1E+0)	-	1E-12	-	-

Tables I, II, and III								
Atomic No.	**Radionuclide**	**Class**	**Table I Occupational Values**			**Table II Effluent Concentrations**		**Table III Releases to Sewers**
			Col. 1	**Col. 2**	**Col. 3**	**Col. 1**	**Col. 2**	**Monthly Average Concen-tration (µCi/ml)**
			Oral Ingestion ALI (µCi)	**Inhalation**		**Air (µCi/ml)**	**Water (µCi/ml)**	
				ALI (µCi)	**DAC (µCi/ml)**			
94	Plutonium-242	W, see ^{234}Pu	8E-1	7E-3	3E-12	-	-	-
			Bone surf (1E+0)	Bone surf (1E-2)	-	2E-14	2E-8	2E-7
		Y, see ^{234}Pu	-	2E-2	7E-12	-	-	-
			-	Bone surf (2E-2)	-	2E-14	-	-
94	Plutonium-243	W, see ^{234}Pu	2E+4	4E+4	2E-5	5E-8	2E-4	2E-3
		Y, see ^{234}Pu	-	4E+4	2E-5	5E-8	-	-
94	Plutonium-244	W, see ^{234}Pu	8E-1	7E-3	3E-12	-	-	-
			Bone surf (2E+0)	Bone surf (1E-2)	-	2E-14	2E-8	2E-7
		Y, see ^{234}Pu	-	2E-2	7E-12	-	-	-
			-	Bone surf (2E-2)	-	2E-14	-	-
94	Plutonium-245	W, see ^{234}Pu	2E+3	5E+3	2E-6	6E-9	3E-5	3E-4
		Y, see ^{234}Pu	-	4E+3	2E-6	6E-9	-	-
94	Plutonium-246	W, see ^{234}Pu	4E+2	3E+2	1E-7	4E-10	-	-
			LLI wall (4E+2)	-	-	-	6E-6	6E-5
		Y, see ^{234}Pu	-	3E+2	1E-7	4E-10	-	-
95	Americium-237[2]	W, all compounds	8E+4	3E+5	1E-4	4E-7	1E-3	1E-2
95	Americium-238[2]	W, all compounds	4E+4	3E+3	1E-6	-	5E-4	5E-3
			-	Bone surf (6E+3)	-	9E-9	-	-
95	Americium-239	W, all compounds	5E+3	1E+4	5E-6	2E-8	7E-5	7E-4
95	Americium-240	W, all compounds	2E+3	3E+3	1E-6	4E-9	3E-5	3E-4
95	Americium-241	W, all compounds	8E-1	6E-3	3E-12	-	-	-
			Bone surf (1E+0)	Bone surf (1E-2)	-	2E-14	2E-8	2E-7
95	Americium-242m	W, all compounds	8E-1	6E-3	3E-12	-	-	-
			Bone surf (1E+0)	Bone surf (1E-2)	-	2E-14	2E-8	2E-7
95	Americium-242	W, all compounds	4E+3	8E+1	4E-8	-	5E-5	5E-4
			-	Bone surf (9E+1)	-	1E-10	-	-
95	Americium-243	W, all compounds	8E-1	6E-3	3E-12	-	-	-
			Bone surf (1E+0)	Bone surf (1E-2)	-	2E-14	2E-8	2E-7
95	Americium-244m[2]	W, all compounds	6E+4	4E+3	2E-6	-	-	-
			St wall (8E+4)	Bone surf (7E+3)	-	1E-8	1E-3	1E-2
95	Americium-244	W, all compounds	3E+3	2E+2	8E-8	-	4E-5	4E-4
			-	Bone surf (3E+2)	-	4E-10	-	-
95	Americium-245	W, all compounds	3E+4	8E+4	3E-5	1E-7	4E-4	4E-3
95	Americium-246m[2]	W, all compounds	5E+4	2E+5	8E-5	3E-7	-	-
			St wall (6E+4)	-	-	-	8E-4	8E-3
95	Americium-246[2]	W, all compounds	3E+4	1E+5	4E-5	1E-7	4E-4	4E-3
96	Curium-238	W, all compounds	2E+4	1E+3	5E-7	2E-9	2E-4	2E-3
96	Curium-240	W, all compounds	6E+1	6E-1	2E-10	-	-	-
			Bone surf (8E+1)	Bone surf (6E-1)	-	9E-13	1E-6	1E-5
96	Curium-241	W, all compounds	1E+3	3E+1	1E-8	-	2E-5	2E-4
			-	Bone surf (4E+1)	-	5E-11	-	-
96	Curium-242	W, all compounds	3E+1	3E-1	1E-10	-	-	-
			Bone surf (5E+1)	Bone surf (3E-1)	-	4E-13	7E-7	7E-6
96	Curium-243	W, all compounds	1E+0	9E-3	4E-12	-	-	-
			Bone surf (2E+0)	Bone surf (2E-2)	-	2E-14	3E-8	3E-7

Tables I, II, and III								
Atomic No.	Radionuclide	Class	Table I Occupational Values			Table II Effluent Concentrations		Table III Releases to Sewers
			Col. 1	Col. 2	Col. 3	Col. 1	Col. 2	Monthly Average Concen-tration (µCi/ml)
			Oral Ingestion ALI (µCi)	Inhalation ALI (µCi)	Inhalation DAC (µCi/ml)	Air (µCi/ml)	Water (µCi/ml)	
96	Curium-244	W, all compounds	1E+0	1E-2	5E-12	-	-	-
			Bone surf (3E+0)	Bone surf (2E-2)	-	3E-14	3E-8	3E-7
96	Curium-245	W, all compounds	7E-1	6E-3	3E-12	-	-	-
			Bone surf (1E+0)	Bone surf (1E-2)	-	2E-14	2E-8	2E-7
96	Curium-246	W, all compounds	7E-1	6E-3	3E-12	-	-	-
			Bone surf (1E+0)	Bone surf (1E-2)	-	2E-14	2E-8	2E-7
96	Curium-247	W, all compounds	8E-1	6E-3	3E-12	-	-	-
			Bone surf (1E+0)	Bone surf (1E-2)	-	2E-14	2E-8	2E-7
96	Curium-248	W, all compounds	2E-1	2E-3	7E-13	-	-	-
			Bone surf (4E-1)	Bone surf (3E-3)	-	4E-15	5E-9	5E-8
96	Curium-249[2]	W, all compounds	5E+4	2E+4	7E-6	-	7E-4	7E-3
			-	Bone surf (3E+4)	-	4E-8	-	-
96	Curium-250	W, all compounds	4E-2	3E-4	1E-13	-	-	-
			Bone surf (6E-2)	Bone surf (5E-4)	-	8E-16	9E-10	9E-9
97	Berkelium-245	W, all compounds	2E+3	1E+3	5E-7	2E-9	3E-5	3E-4
97	Berkelium-246	W, all compounds	3E+3	3E+3	1E-6	4E-9	4E-5	4E-4
97	Berkelium-247	W, all compounds	5E-1	4E-3	2E-12	-	-	-
			Bone surf (1E+0)	Bone surf (9E-3)	-	1E-14	2E-8	2E-7
97	Berkelium-249	W, all compounds	2E+2	2E+0	7E-10	-	-	-
			Bone surf (5E+2)	Bone surf (4E+0)	-	5E-12	6E-6	6E-5
97	Berkelium-250	W, all compounds	9E+3	3E+2	1E-7	-	1E-4	1E-3
			-	Bone surf (7E+2)	-	1E-9	-	-
98	Californium-244[2]	W, all compounds except those given for Y	3E+4	6E+2	2E-7	8E-10	-	-
			St wall (3E+4)	-	-	-	4E-4	4E-3
		Y, oxides and hydroxides	-	6E+2	2E-7	8E-10	-	-
98	Californium-246	W, see ^{244}Cf	4E+2	9E+0	4E-9	1E-11	5E-6	5E-5
		Y, see ^{244}Cf	-	9E+0	4E-9	1E-11	-	-
98	Californium-248	W, see ^{244}Cf	8E+0	6E-2	3E-11	-	-	-
			Bone surf (2E+1)	Bone surf (1E-1)	-	2E-13	2E-7	2E-6
		Y, see ^{244}Cf	-	1E-1	4E-11	1E-13	-	-
98	Californium-249	W, see ^{244}Cf	5E-1	4E-3	2E-12	-	-	-
			Bone surf (1E+0)	Bone surf (9E-3)	-	1E-14	2E-8	2E-7
		Y, see ^{244}Cf	-	1E-2	4E-12	-	-	-
			-	Bone surf (1E-2)	-	2E-14	-	-
98	Californium-250	W, see ^{244}Cf	1E+0	9E-3	4E-12	-	-	-
			Bone surf (2E+0)	Bone surf (2E-2)	-	3E-14	3E-8	3E-7
		Y, see ^{244}Cf	-	3E-2	1E-11	4E-14	-	-
98	Californium-251	W, see ^{244}Cf	5E-1	4E-3	2E-12	-	-	-
			Bone surf (1E+0)	Bone surf (9E-3)	-	1E-14	2E-8	2E-7
		Y, see ^{244}Cf	-	1E-2	4E-12	-	-	-
			-	Bone surf (1E-2)	-	2E-14	-	-

Tables I, II, and III								
Atomic No.	**Radionuclide**	**Class**	**Table I Occupational Values**			**Table II Effluent Concentrations**		**Table III Releases to Sewers**
			Col. 1	**Col. 2**	**Col. 3**	**Col. 1**	**Col. 2**	**Monthly Average Concen-tration (µCi/ml)**
			Oral Ingestion ALI (µCi)	**Inhalation**		**Air (µCi/ml)**	**Water (µCi/ml)**	
				ALI (µCi)	**DAC (µCi/ml)**			
98	Californium-252	W, see ^{244}Cf	2E+0	2E-2	8E-12	-	-	-
			Bone surf (5E+0)	Bone surf (4E-2)	-	5E-14	7E-8	7E-7
		Y, see ^{244}Cf	-	3E-2	1E-11	5E-14	-	-
98	Californium-253	W, see ^{244}Cf	2E+2	2E+0	8E-10	3E-12	-	-
			Bone surf (4E+2)	-	-	-	5E-6	5E-5
		Y, see ^{244}Cf	-	2E+0	7E-10	2E-12	-	-
98	Californium-254	W, see ^{244}Cf	2E+0	2E-2	9E-12	3E-14	3E-8	3E-7
		Y, see ^{244}Cf	-	2E-2	7E-12	2E-14	-	-
99	Einsteinium-250	W, all compounds	4E+4	5E+2	2E-7	-	6E-4	6E-3
			-	Bone surf (1E+3)	-	2E-9	-	-
99	Einsteinium-251	W, all compounds	7E+3	9E+2	4E-7	-	1E-4	1E-3
			-	Bone surf (1E+3)	-	2E-9	-	-
99	Einsteinium-253	W, all compounds	2E+2	1E+0	6E-10	2E-12	2E-6	2E-5
99	Einsteinium-254m	W, all compounds	3E+2	1E+1	4E-9	1E-11	-	-
			LLI wall (3E+2)	-	-	-	4E-6	4E-5
99	Einsteinium-254	W, all compounds	8E+0	7E-2	3E-11	-	-	-
			Bone surf (2E+1)	Bone surf (1E-1)	-	2E-13	2E-7	2E-6
100	Fermium-252	W, all compounds	5E+2	1E+1	5E-9	2E-11	6E-6	6E-5
100	Fermium-253	W, all compounds	1E+3	1E+1	4E-9	1E-11	1E-5	1E-4
100	Fermium-254	W, all compounds	3E+3	9E+1	4E-8	1E-10	4E-5	4E-4
100	Fermium-255	W, all compounds	5E+2	2E+1	9E-9	3E-11	7E-6	7E-5
100	Fermium-257	W, all compounds	2E+1	2E-1	7E-11	-	-	-
			Bone surf (4E+1)	Bone surf (2E-1)	-	3E-13	5E-7	5E-6
101	Mendelevium-257	W, all compounds	7E+3	8E+1	4E-8	-	1E-4	1E-3
			-	Bone surf (9E+1)	-	1E-10	-	-
101	Mendelevium-258	W, all compounds	3E+1	2E-1	1E-10	-	-	-
			Bone surf (5E+1)	Bone surf (3E-1)	-	5E-13	6E-7	6E-6
-	Any single radionuclide not listed above with decay mode other than alpha emission or spontaneous fission and with radioactive half-life less than 2 hours	Submersion[1]	-	2E+2	1E-7	1E-9	-	-
-	Any single radionuclide not listed above with decay mode other than alpha emission or spontaneous fission and with radioactive half-life greater than 2 hours		-	2E-1	1E-10	1E-12	1E-8	1E-7

Tables I, II, and III								
Atomic No.	Radionuclide	Class	Table I Occupational Values			Table II Effluent Concentrations		Table III Releases to Sewers
			Col. 1	Col. 2	Col. 3	Col. 1	Col. 2	Monthly Average Concen-tration (µCi/ml)
			Oral Ingestion ALI (µCi)	Inhalation ALI (µCi)	Inhalation DAC (µCi/ml)	Air (µCi/ml)	Water (µCi/ml)	
-	Any single radionuclide not listed above that decays by alpha emission or spontaneous fission, or any mixture for which either the identity or the concentration of any radionuclide in the mixture is not known	-	-	4E-4	2E-13	1E-15	2E-9	2E-8

ENDNOTES:

[1]"Submersion" means that values given are for submersion in a hemispherical semi-infinite cloud of airborne material.

[2] These radionuclides have radiological half-lives of less than 2 hours. The total effective dose equivalent received during operations with these radionuclides might include a significant contribution from external exposure. The DAC values for all radionuclides, other than those designated Class "Submersion," are based upon the committed effective dose equivalent due to the intake of the radionuclide into the body and do not include potentially significant contributions to dose equivalent from external exposures. The licensee may substitute 1E-7 µCi/ml for the listed DAC to account for the submersion dose prospectively, but should use individual monitoring devices or other radiation measuring instruments that measure external exposure to demonstrate compliance with the limits. (See LAC 33:XV.412)

[3] For soluble mixtures of U-238, U-234, and U-235 in air, chemical toxicity may be the limiting factor (see LAC 33:XV.410.E). If the percent by weight (enrichment) of U-235 is not greater than 5, the concentration value for a 40-hour workweek is 0.2 milligrams uranium per cubic meter of air average. For any enrichment, the product of the average concentration and time of exposure during a 40-hour workweek shall not exceed 8E-3 (SA) µCi-hr/ml, where SA is the specific activity of the uranium inhaled. The specific activity for natural uranium is 6.77E-7 curies per gram U. The specific activity for other mixtures of U-238, U-235, and U-234, if not known, shall be:

SA = 3.6E-7 curies/gram U U-depleted

$$SA = [0.4 + 0.38\ (\text{enrichment}) + 0.0034\ (\text{enrichment})^2]\ E - 6, \quad \text{enrichment} \geq 0.72$$

where enrichment is the percentage by weight of U-235, expressed as percent.

NOTE:

1. If the identity of each radionuclide in a mixture is known but the concentration of one or more of the radionuclides in the mixture is not known, the DAC for the mixture shall be the most restrictive DAC of any radionuclide in the mixture.

2. If the identity of each radionuclide in the mixture is not known, but it is known that certain radionuclides specified in this Appendix are not present in the mixture, the inhalation ALI, DAC, and effluent and sewage concentrations for the mixture are the lowest values specified in this Appendix for any radionuclide that is not known to be absent from the mixture; or

Tables I, II, and III								
Atomic No.	**Radionuclide**	**Class**	**Table I Occupational Values**			**Table II Effluent Concentrations**		**Table III Releases to Sewers**
			Col. 1	**Col. 2**	**Col. 3**	**Col. 1**	**Col. 2**	**Monthly Average Concentration (µCi/ml)**
			Oral Ingestion ALI (µCi)	**Inhalation**		**Air (µCi/ml)**	**Water (µCi/ml)**	
				ALI (µCi)	**DAC (µCi/ml)**			
If it is known that Ac-227-D and Cm-250-W are not present			-	7E-4	3E-13	-	-	-
If, in addition, it is known that Ac-227-W,Y, Th-229-W,Y, Th-230-W, Th-232-W,Y, Pa-231-W,Y, Np-237-W, Pu-239-W, Pu-240-W, Pu-242-W, Am-241-W, Am-242m-W, Am-243-W, Cm-245-W, Cm-246-W, Cm-247-W, Cm-248-W, Bk-247-W, Cf-249-W, and Cf-251-W are not present			-	7E-3	3E-12	-	-	-
If, in addition, it is known that Sm-146-W, Sm-147-W, Gd-148-D,W, Gd-152-D,W, Th-228-W,Y, Th-230-Y, U-232-Y, U-233-Y, U-234-Y, U-235-Y, U-236-Y, U-238-Y, Np-236-W, Pu-236-W,Y, Pu-238-W,Y, Pu-239-Y, Pu-240-Y, Pu-242-Y, Pu-244-W,Y, Cm-243-W, Cm-244-W, Cf-248-W, Cf-249-Y, Cf-250-W,Y, Cf-251-Y, Cf-252-W,Y, and Cf-254-W,Y are not present			-	7E-2	3E-11	-	-	-
If, in addition, it is known that Pb-210-D, Bi-210m-W, Po-210-D,W, Ra-223-W, Ra-225-W, Ra-226-W, Ac-225-D,W,Y, Th-227-W,Y, U-230-D,W,Y, U-232-D,W, Pu-241-W, Cm-240-W, Cm-242-W, Cf-248-Y, Es-254-W, Fm-257-W, and Md-258-W are not present			-	7E-1	3E-10	-	-	-
If, in addition, it is known that Si-32-Y, Ti-44-Y, Fe-60-D, Sr-90-Y, Zr-93-D, Cd-113m-D, Cd-113-D, In-115-D,W, La-138-D, Lu-176-W, Hf-178m-D,W, Hf-182-D,W, Bi-210m-D, Ra-224-W, Ra-228-W, Ac-226-D,W,Y, Pa-230-W,Y, U-233-D,W, U-234-D,W, U-235-D,W, U-236-D,W, U-238-D,W, Pu-241-Y, Bk-249-W, Cf-253-W,Y, and Es-253-W are not present			-	7E+0	3E-9	-	-	-
If it is known that Ac-227-D,W,Y, Th-229-W,Y, Th-232-W,Y, Pa-231-W,Y, Cm-248-W, and Cm-250-W are not present			-	-	-	-	1E-14	-
If, in addition, it is known that Sm-146-W, Gd-148-D,W, Gd-152-D, Th-228-W,Y, Th-230-W,Y, U-232-Y, U-233-Y, U-234-Y, U-235-Y, U-236-Y, U-238-Y, U-Nat-Y, Np-236-W, Np-237-W, Pu-236-W,Y, Pu-238-W,Y, Pu-239-W,Y, Pu-240-W,Y, Pu-242-W,Y, Pu-244-W,Y, Am-241-W, Am-242m-W, Am-243-W, Cm-243-W, Cm-244-W, Cm-245-W, Cm-246-W, Cm-247-W, Bk-247-W, Cf-249-W,Y, Cf-250-W,Y, Cf-251-W,Y, Cf-252-W,Y, and Cf-254-W,Y are not present			-	-	-	1E-13	-	-
If, in addition, it is known that Sm-147-W, Gd-152-W, Pb-210-D, Bi-210m-W, Po-210-D,W, Ra-223-W, Ra-225-W, Ra-226-W, Ac-225-D,W,Y, Th-227-W,Y, U-230-D,W,Y, U-232-D,W, U-Nat-W, Pu-241-W, Cm-240-W, Cm-242-W, Cf-248-W,Y, Es-254-W, Fm-257-W, and Md-258-W are not present			-	-	-	-	1E-12	-
If, in addition it is known that Fe-60, Sr-90, Cd-113m, Cd-113, In-115, I-129, Cs-134, Sm-145, Sm-147, Gd-148, Gd-152, Hg-194 (organic), Bi-210m, Ra-223, Ra-224, Ra-225, Ac-225, Th-228, Th-230, U-233, U-234, U-235, U-236, U-238, U-Nat, Cm-242, Cf-248, Es-254, Fm-257, and Md-258 are not present			-	-	-	-	1E-6	1E-5

3. If a mixture of radionuclides consists of uranium and its daughters in ore dust (10 µm AMAD particle distribution assumed) prior to chemical separation of the uranium from the ore, the following values may be used for the DAC of the mixture: 6E-11 µCi of gross alpha activity from uranium-238, uranium-234, thorium-230, and radium-226 per milliliter of air; 3E-11 µCi of natural uranium per milliliter of air; or 45 micrograms of natural uranium per cubic meter of air.

4. If the identity and concentration of each radionuclide in a mixture are known, the limiting values should be derived as follows: determine, for each radionuclide in the mixture, the ratio between the

concentration present in the mixture and the concentration otherwise established in Appendix B of this Chapter for the specific radionuclide when not in a mixture. The sum of such ratios for all of the radionuclides in the mixture may not exceed "1" (i.e., "unity").

Example: If radionuclides "A," "B," and "C" are present in concentrations C_A, C_B, and C_C, and if the applicable DACs are DAC_A, DAC_B, and DAC_C, respectively, then the concentrations shall be limited so that the following relationship exists:

$$\frac{C_A}{DAC_A} + \frac{C_B}{DAC_B} + \frac{C_C}{DAC_C} \leq 1$$

Appendix C
Quantities[1] of Licensed or Registered Sources of Radiation Requiring Labeling

Radionuclide	Quantity (µCi)*
Hydrogen-3	1,000
Beryllium-7	1,000
Beryllium-10	1
Carbon-11	1,000
Carbon-14	100
Fluorine-18	1,000
Sodium-22	10
Sodium-24	100
Magnesium-28	100
Aluminum-26	10
Silicon-31	1,000
Silicon-32	1
Phosphorus-32	10
Phosphorus-33	100
Sulfur-35	100
Chlorine-36	10
Chlorine-38	1,000
Chlorine-39	1,000
Argon-39	1,000
Argon-41	1,000
Potassium-40	100
Potassium-42	1,000
Potassium-43	1,000
Potassium-44	1,000
Potassium-45	1,000
Calcium-41	100
Calcium-45	100
Calcium-47	100
Scandium-43	1,000
Scandium-44m	100
Scandium-44	100
Scandium-46	10
Scandium-47	100
Scandium-48	100
Scandium-49	1,000
Titanium-44	1
Titanium-45	1,000
Vanadium-47	1,000
Vanadium-48	100
Vanadium-49	1,000
Chromium-48	1,000
Chromium-49	1,000
Chromium-51	1,000
Manganese-51	1,000
Manganese-52m	1,000
Manganese-52	100
Manganese-53	1,000
Manganese-54	100

Appendix C
Quantities[1] of Licensed or Registered Sources of Radiation Requiring Labeling

Radionuclide	Quantity (µCi)*
Manganese-56	1,000
Iron-52	100
Iron-55	100
Iron-59	10
Iron-60	1
Cobalt-55	100
Cobalt-56	10
Cobalt-57	100
Cobalt-58m	1,000
Cobalt-58	100
Cobalt-60m	1,000
Cobalt-60	1
Cobalt-61	1,000
Cobalt-62m	1,000
Nickel-56	100
Nickel-57	100
Nickel-59	100
Nickel-63	100
Nickel-65	1,000
Nickel-66	10
Copper-60	1,000
Copper-61	1,000
Copper-64	1,000
Copper-67	1,000
Zinc-62	100
Zinc-63	1,000
Zinc-65	10
Zinc-69m	100
Zinc-69	1,000
Zinc-71m	1,000
Zinc-72	100
Gallium-65	1,000
Gallium-66	100
Gallium-67	1,000
Gallium-68	1,000
Gallium-70	1,000
Gallium-72	100
Gallium-73	1,000
Germanium-66	1,000
Germanium-67	1,000
Germanium-68	10
Germanium-69	1,000
Germanium-71	1,000
Germanium-75	1,000
Germanium-77	1,000
Germanium-78	1,000
Arsenic-69	1,000
Arsenic-70	1,000
Arsenic-71	100
Arsenic-72	100
Arsenic-73	100
Arsenic-74	100
Arsenic-76	100
Arsenic-77	100
Arsenic-78	1,000
Selenium-70	1,000
Selenium-73m	1,000
Selenium-73	100
Selenium-75	100
Selenium-79	100
Selenium-81m	1,000
Selenium-81	1,000
Selenium-83	1,000
Bromine-74m	1,000

Appendix C Quantities[1] of Licensed or Registered Sources of Radiation Requiring Labeling	
Radionuclide	**Quantity (µCi)***
Bromine-74	1,000
Bromine-75	1,000
Bromine-76	100
Bromine-77	1,000
Bromine-80m	1,000
Bromine-80	1,000
Bromine-82	100
Bromine-83	1,000
Bromine-84	1,000
Krypton-74	1,000
Krypton-76	1,000
Krypton-77	1,000
Krypton-79	1,000
Krypton-81	1,000
Krypton-83m	1,000
Krypton-85m	1,000
Krypton-85	1,000
Krypton-87	1,000
Krypton-88	1,000
Rubidium-79	1,000
Rubidium-81m	1,000
Rubidium-81	1,000
Rubidium-82m	1,000
Rubidium-83	100
Rubidium-84	100
Rubidium-86	100
Rubidium-87	100
Rubidium-88	1,000
Rubidium-89	1,000
Strontium-80	100
Strontium-81	1,000
Strontium-83	100
Strontium-85m	1,000
Strontium-85	100
Strontium-87m	1,000
Strontium-89	10
Strontium-90	0.1
Strontium-91	100
Strontium-92	100
Yttrium-86m	1,000
Yttrium-86	100
Yttrium-87	100
Yttrium-88	10
Yttrium-90m	1,000
Yttrium-90	10
Yttrium-91m	1,000
Yttrium-91	10
Yttrium-92	100
Yttrium-93	100
Yttrium-94	1,000
Yttrium-95	1,000
Zirconium-86	100
Zirconium-88	10
Zirconium-89	100
Zirconium-93	1
Zirconium-95	10
Zirconium-97	100
Niobium-88	1,000
Niobium-89m (66 min)	1,000
Niobium-89 (122 min)	1,000
Niobium-90	100
Niobium-93m	10
Niobium-94	1
Niobium-95m	100

Appendix C Quantities[1] of Licensed or Registered Sources of Radiation Requiring Labeling	
Radionuclide	**Quantity (µCi)***
Niobium-95	100
Niobium-96	100
Niobium-97	1,000
Niobium-98	1,000
Molybdenum-90	100
Molybdenum-93m	100
Molybdenum-93	10
Molybdenum-99	100
Molybdenum-101	1,000
Technetium-93m	1,000
Technetium-93	1,000
Technetium-94m	1,000
Technetium-94	1,000
Technetium-96m	1,000
Technetium-96	100
Technetium-97m	100
Technetium-97	1,000
Technetium-98	10
Technetium-99m	1,000
Technetium-99	100
Technetium-101	1,000
Technetium-104	1,000
Ruthenium-94	1,000
Ruthenium-97	1,000
Ruthenium-103	100
Ruthenium-105	1,000
Ruthenium-106	1
Rhodium-99m	1,000
Rhodium-99	100
Rhodium-100	100
Rhodium-101m	1,000
Rhodium-101	10
Rhodium-102m	10
Rhodium-102	10
Rhodium-103m	1,000
Rhodium-105	100
Rhodium-106m	1,000
Rhodium-107	1,000
Palladium-100	100
Palladium-101	1,000
Palladium-103	100
Palladium-107	10
Palladium-109	100
Silver-102	1,000
Silver-103	1,000
Silver-104m	1,000
Silver-104	1,000
Silver-105	100
Silver-106m	100
Silver-106	1,000
Silver-108m	1
Silver-110m	10
Silver-111	100
Silver-112	100
Silver-115	1,000
Cadmium-104	1,000
Cadmium-107	1,000
Cadmium-109	1
Cadmium-113m	0.1
Cadmium-113	100
Cadmium-115m	10
Cadmium-115	100
Cadmium-117m	1,000
Cadmium-117	1,000

Appendix C Quantities[1] of Licensed or Registered Sources of Radiation Requiring Labeling	
Radionuclide	**Quantity (µCi)***
Indium-109	1,000
Indium-110m (69.1min.)	1,000
Indium-110 (4.9h)	1,000
Indium-111	100
Indium-112	1,000
Indium-113m	1,000
Indium-114m	10
Indium-115m	1,000
Indium-115	100
Indium-116m	1,000
Indium-117m	1,000
Indium-117	1,000
Indium-119m	1,000
Tin-110	100
Tin-111	1,000
Tin-113	100
Tin-117m	100
Tin-119m	100
Tin-121m	100
Tin-121	1,000
Tin-123m	1,000
Tin-123	10
Tin-125	10
Tin-126	10
Tin-127	1,000
Tin-128	1,000
Antimony-115	1,000
Antimony-116m	1,000
Antimony-116	1,000
Antimony-117	1,000
Antimony-118m	1,000
Antimony-119	1,000
Antimony-120 (16min.)	1,000
Antimony-120 (5.76d)	100
Antimony-122	100
Antimony-124m	1,000
Antimony-124	10
Antimony-125	100
Antimony-126m	1,000
Antimony-126	100
Antimony-127	100
Antimony-128 (10.4min.)	1,000
Antimony-128 (9.01h)	100
Antimony-129	100
Antimony-130	1,000
Antimony-131	1,000
Tellurium-116	1,000
Tellurium-121m	10
Tellurium-121	100
Tellurium-123m	10
Tellurium-123	100
Tellurium-125m	10
Tellurium-127m	10
Tellurium-127	1,000
Tellurium-129m	10
Tellurium-129	1,000
Tellurium-131m	10
Tellurium-131	100
Tellurium-132	10
Tellurium-133m	100
Tellurium-133	1,000
Tellurium-134	1,000
Iodine-120m	1,000
Iodine-120	100

Appendix C Quantities[1] of Licensed or Registered Sources of Radiation Requiring Labeling	
Radionuclide	**Quantity (µCi)***
Iodine-121	1,000
Iodine-123	100
Iodine-124	10
Iodine-125	1
Iodine-126	1
Iodine-128	1,000
Iodine-129	1
Iodine-130	10
Iodine-131	1
Iodine-132m	100
Iodine-132	100
Iodine-133	10
Iodine-134	1,000
Iodine-135	100
Xenon-120	1,000
Xenon-121	1,000
Xenon-122	1,000
Xenon-123	1,000
Xenon-125	1,000
Xenon-127	1,000
Xenon-129m	1,000
Xenon-131m	1,000
Xenon-133m	1,000
Xenon-133	1,000
Xenon-135m	1,000
Xenon-135	1,000
Xenon-138	1,000
Cesium-125	1,000
Cesium-127	1,000
Cesium-129	1,000
Cesium-130	1,000
Cesium-131	1,000
Cesium-132	100
Cesium-134m	1,000
Cesium-134	10
Cesium-135m	1,000
Cesium-135	100
Cesium-136	10
Cesium-137	10
Cesium-138	1,000
Barium-126	1,000
Barium-128	100
Barium-131m	1,000
Barium-131	100
Barium-133m	100
Barium-133	100
Barium-135m	100
Barium-139	1,000
Barium-140	100
Barium-141	1,000
Barium-142	1,000
Lanthanum-131	1,000
Lanthanum-132	100
Lanthanum-135	1,000
Lanthanum-137	10
Lanthanum-138	100
Lanthanum-140	100
Lanthanum-141	100
Lanthanum-142	1,000
Lanthanum-143	1,000
Cerium-134	100
Cerium-135	100
Cerium-137m	100
Cerium-137	1,000

Appendix C Quantities[1] of Licensed or Registered Sources of Radiation Requiring Labeling	
Radionuclide	**Quantity (µCi)***
Cerium-139	100
Cerium-141	100
Cerium-143	100
Cerium-144	1
Praseodymium-136	1,000
Praseodymium-137	1,000
Praseodymium-138m	1,000
Praseodymium-139	1,000
Praseodymium-142m	1,000
Praseodymium-142	100
Praseodymium-143	100
Praseodymium-144	1,000
Praseodymium-145	100
Praseodymium-147	1,000
Neodymium-136	1,000
Neodymium-138	100
Neodymium-139m	1,000
Neodymium-139	1,000
Neodymium-141	1,000
Neodymium-147	100
Neodymium-149	1,000
Neodymium-151	1,000
Promethium-141	1,000
Promethium-143	100
Promethium-144	10
Promethium-145	10
Promethium-146	1
Promethium-147	10
Promethium-148m	10
Promethium-148	10
Promethium-149	100
Promethium-150	1,000
Promethium-151	100
Samarium-141m	1,000
Samarium-141	1,000
Samarium-142	1,000
Samarium-145	100
Samarium-146	1
Samarium-147	100
Samarium-151	10
Samarium-153	100
Samarium-155	1,000
Samarium-156	1,000
Europium-145	100
Europium-146	100
Europium-147	100
Europium-148	10
Europium-149	100
Europium-150 (12.62h)	100
Europium-150 (34.2y)	1
Europium-152m	100
Europium-152	1
Europium-154	1
Europium-155	10
Europium-156	100
Europium-157	100
Europium-158	1,000
Gadolinium-145	1,000
Gadolinium-146	10
Gadolinium-147	100
Gadolinium-148	0.001
Gadolinium-149	100
Gadolinium-151	10
Gadolinium-152	100

Appendix C Quantities[1] of Licensed or Registered Sources of Radiation Requiring Labeling	
Radionuclide	**Quantity (µCi)***
Gadolinium-153	10
Gadolinium-159	100
Terbium-147	1,000
Terbium-149	100
Terbium-150	1,000
Terbium-151	100
Terbium-153	1,000
Terbium-154	100
Terbium-155	1,000
Terbium-156m (5.0h)	1,000
Terbium-156m (24.4h)	1,000
Terbium-156	100
Terbium-157	10
Terbium-158	1
Terbium-160	10
Terbium-161	100
Dysprosium-155	1,000
Dysprosium-157	1,000
Dysprosium-159	100
Dysprosium-165	1,000
Dysprosium-166	100
Holmium-155	1,000
Holmium-157	1,000
Holmium-159	1,000
Holmium-161	1,000
Holmium-162m	1,000
Holmium-162	1,000
Holmium-164m	1,000
Holmium-164	1,000
Holmium-166m	1
Holmium-166	100
Holmium-167	1,000
Erbium-161	1,000
Erbium-165	1,000
Erbium-169	100
Erbium-171	100
Erbium-172	100
Thulium-162	1,000
Thulium-166	100
Thulium-167	100
Thulium-170	10
Thulium-171	10
Thulium-172	100
Thulium-173	100
Thulium-175	1,000
Ytterbium-162	1,000
Ytterbium-166	100
Ytterbium-167	1,000
Ytterbium-169	100
Ytterbium-175	100
Ytterbium-177	1,000
Ytterbium-178	1,000
Lutetium-169	100
Lutetium-170	100
Lutetium-171	100
Lutetium-172	100
Lutetium-173	10
Lutetium-174m	10
Lutetium-174	10
Lutetium-176m	1,000
Lutetium-176	100
Lutetium-177m	10
Lutetium-177	100
Lutetium-178m	1,000

Appendix C Quantities[1] of Licensed or Registered Sources of Radiation Requiring Labeling	
Radionuclide	**Quantity (µCi)***
Lutetium-178	1,000
Lutetium-179	1,000
Hafnium-170	100
Hafnium-172	1
Hafnium-173	1,000
Hafnium-175	100
Hafnium-177m	1,000
Hafnium-178m	0.1
Hafnium-179m	10
Hafnium-180m	1,000
Hafnium-181	10
Hafnium-182m	1,000
Hafnium-182	0.1
Hafnium-183	1,000
Hafnium-184	100
Tantalum-172	1,000
Tantalum-173	1,000
Tantalum-174	1,000
Tantalum-175	1,000
Tantalum-176	100
Tantalum-177	1,000
Tantalum-178	1,000
Tantalum-179	100
Tantalum-180m	1,000
Tantalum-180	100
Tantalum-182m	1,000
Tantalum-182	10
Tantalum-183	100
Tantalum-184	100
Tantalum-185	1,000
Tantalum-186	1,000
Tungsten-176	1,000
Tungsten-177	1,000
Tungsten-178	1,000
Tungsten-179	1,000
Tungsten-181	1,000
Tungsten-185	100
Tungsten-187	100
Tungsten-188	10
Rhenium-177	1,000
Rhenium-178	1,000
Rhenium-181	1,000
Rhenium-182 (12.7h)	1,000
Rhenium-182 (64.0h)	100
Rhenium-184m	10
Rhenium-184	100
Rhenium-186m	10
Rhenium-186	100
Rhenium-187	1,000
Rhenium-188m	1,000
Rhenium-188	100
Rhenium-189	100
Osmium-180	1,000
Osmium-181	1,000
Osmium-182	100
Osmium-185	100
Osmium-189m	1,000
Osmium-191m	1,000
Osmium-191	100
Osmium-193	100
Osmium-194	1
Iridium-182	1,000
Iridium-184	1,000
Iridium-185	1,000

Appendix C Quantities[1] of Licensed or Registered Sources of Radiation Requiring Labeling	
Radionuclide	**Quantity (µCi)***
Iridium-186	100
Iridium-187	1,000
Iridium-188	100
Iridium-189	100
Iridium-190m	1,000
Iridium-190	100
Iridium-192 (73.8d)	1
Iridium-192m (1.4min.)	10
Iridium-194m	10
Iridium-194	100
Iridium-195m	1,000
Iridium-195	1,000
Platinum-186	1,000
Platinum-188	100
Platinum-189	1,000
Platinum-191	100
Platinum-193m	100
Platinum-193	1,000
Platinum-195m	100
Platinum-197m	1,000
Platinum-197	100
Platinum-199	1,000
Platinum-200	100
Gold-193	1,000
Gold-194	100
Gold-195	10
Gold-198m	100
Gold-198	100
Gold-199	100
Gold-200m	100
Gold-200	1,000
Gold-201	1,000
Mercury-193m	100
Mercury-193	1,000
Mercury-194	1
Mercury-195m	100
Mercury-195	1,000
Mercury-197m	100
Mercury-197	1,000
Mercury-199m	1,000
Mercury-203	100
Thallium-194m	1,000
Thallium-194	1,000
Thallium-195	1,000
Thallium-197	1,000
Thallium-198m	1,000
Thallium-198	1,000
Thallium-199	1,000
Thallium-200	1,000
Thallium-201	1,000
Thallium-202	100
Thallium-204	100
Lead-195m	1,000
Lead-198	1,000
Lead-199	1,000
Lead-200	100
Lead-201	1,000
Lead-202m	1,000
Lead-202	10
Lead-203	1,000
Lead-205	100
Lead-209	1,000
Lead-210	0.01
Lead-211	100

Appendix C
Quantities[1] of Licensed or Registered Sources of Radiation Requiring Labeling

Radionuclide	Quantity (μCi)*
Lead-212	1
Lead-214	100
Bismuth-200	1,000
Bismuth-201	1,000
Bismuth-202	1,000
Bismuth-203	100
Bismuth-205	100
Bismuth-206	100
Bismuth-207	10
Bismuth-210m	0.1
Bismuth-210	1
Bismuth-212	10
Bismuth-213	10
Bismuth-214	100
Polonium-203	1,000
Polonium-205	1,000
Polonium-207	1,000
Polonium-210	0.1
Astatine-207	100
Astatine-211	10
Radon-220	1
Radon-222	1
Francium-222	100
Francium-223	100
Radium-223	0.1
Radium-224	0.1
Radium-225	0.1
Radium-226	0.1
Radium-227	1,000
Radium-228	0.1
Actinium-224	1
Actinium-225	0.01
Actinium-226	0.1
Actinium-227	0.001
Actinium-228	1
Thorium-226	10
Thorium-227	0.01
Thorium-228	0.001
Thorium-229	0.001
Thorium-230	0.001
Thorium-231	100
Thorium-232	100
Thorium-234	10
Thorium-natural	100
Protactinium-227	10
Protactinium-228	1
Protactinium-230	0.1
Protactinium-231	0.001
Protactinium-232	1
Protactinium-233	100
Protactinium-234	100
Uranium-230	0.01
Uranium-231	100
Uranium-232	0.001
Uranium-233	0.001
Uranium-234	0.001
Uranium-235	0.001
Uranium-236	0.001
Uranium-237	100
Uranium-238	100
Uranium-239	1,000
Uranium-240	100
Uranium-natural	100
Neptunium-232	100

Appendix C
Quantities[1] of Licensed or Registered Sources of Radiation Requiring Labeling

Radionuclide	Quantity (μCi)*
Neptunium-233	1,000
Neptunium-234	100
Neptunium-235	100
Neptunium-236 (1.15×10^5 y)	0.001
Neptunium-236 (22.5h)	1
Neptunium-237	0.001
Neptunium-238	10
Neptunium-239	100
Neptunium-240	1,000
Plutonium-234	10
Plutonium-235	1,000
Plutonium-236	0.001
Plutonium-237	100
Plutonium-238	0.001
Plutonium-239	0.001
Plutonium-240	0.001
Plutonium-241	0.01
Plutonium-242	0.001
Plutonium-243	1,000
Plutonium-244	0.001
Plutonium-245	100
Americium-237	1,000
Americium-238	100
Americium-239	1,000
Americium-240	100
Americium-241	0.001
Americium-242m	0.001
Americium-242	10
Americium-243	0.001
Americium-244m	100
Americium-244	10
Americium-245	1,000
Americium-246m	1,000
Americium-246	1,000
Curium-238	100
Curium-240	0.1
Curium-241	1
Curium-242	0.01
Curium-243	0.001
Curium-244	0.001
Curium-245	0.001
Curium-246	0.001
Curium-247	0.001
Curium-248	0.001
Curium-249	1,000
Berkelium-245	100
Berkelium-246	100
Berkelium-247	0.001
Berkelium-249	0.1
Berkelium-250	10
Californium-244	100
Californium-246	1
Californium-248	0.01
Californium-249	0.001
Californium-250	0.001
Californium-251	0.001
Californium-252	0.001
Californium-253	0.1
Californium-254	0.001
Any alpha emitting radionuclide not listed above or mixtures of alpha emitters of unknown composition	0.001
Einsteinium-250	100
Einsteinium-251	100

Appendix C Quantities[1] of Licensed or Registered Sources of Radiation Requiring Labeling	
Radionuclide	**Quantity (μCi)***
Einsteinium-253	0.1
Einsteinium-254m	1
Einsteinium-254	0.01
Fermium-252	1
Fermium-253	1
Fermium-254	10
Fermium-255	1
Fermium-257	0.01
Mendelevium-257	10
Mendelevium-258	0.01
Any radionuclide other than alpha emitting radionuclides not listed above, or mixtures of beta emitters of unknown composition	0.01

* To convert μCi to kBq, multiply the μCi value by 37.

[NOTE: For purposes of LAC 33:XV.451.E, 454.A, and 485.A where there is involved a combination of radionuclides in known amounts, the limit for the combination shall be derived as follows: determine, for each radionuclide in the combination, the ratio between the quantity present in the combination and the limit otherwise established for the specific radionuclide when not in combination. The sum of such ratios for all radionuclides in the combination may not exceed "1" or unity.]

[1]The quantities listed above were derived by taking 1/10th of the most restrictive ALI listed in Table I, Columns 1 and 2, of LAC 33:XV.499.Appendix B, rounding to the nearest factor of 10, and constraining the values listed between 37 Bq and 37 MBq (0.001 and 1,000 μCi). Values of 3.7 MBq (100 μCi) have been assigned for radionuclides having a radioactive half-life in excess of E+9 years, except rhenium, 37 MBq or 1,000 μCi, to take into account their low specific activity.

Appendix D
Requirements for Transfer of Low-Level Radioactive Waste for Disposal at Land Disposal Facilities and Manifests

A. Manifest. A waste generator, collector, or processor who transports, or offers for transportation, low-level radioactive waste intended for ultimate disposal at a licensed low-level radioactive waste land disposal facility shall prepare a manifest (OMB Control Numbers 3150-0164,-0165, and-0166) reflecting information requested on applicable NRC Forms 540 (Uniform Low-Level Radioactive Waste Manifest [Shipping Paper]) and 541 (Uniform Low-Level Radioactive Waste Manifest [Container and Waste Description]) and, if necessary, on an applicable NRC Form 542 (Uniform Low-Level Radioactive Waste Manifest [Manifest Index and Regional Compact Tabulation]). NRC Forms 540 and 540A shall be completed and shall physically accompany the pertinent low-level waste shipment. Upon agreement between shipper and consignee, NRC Forms 541, 541A, 542, and 542A may be completed, transmitted, and stored in electronic media with the capability for producing legible, accurate, and complete records on the respective forms.

1. Licensees are not required by the department to comply with the manifesting requirements of this Appendix when they ship:

a. LLW (Low-Level Waste) for processing and expect its return (i.e., for storage under their license) prior to disposal at a licensed land disposal facility;

b. LLW that is being returned to the licensee who is the *waste generator* or *generator*, as defined in this Appendix; or

c. radioactively contaminated material to a *waste processor* that becomes the processor's *residual waste*.

B. For guidance in completing these forms, refer to the instructions that accompany the forms. Copies of manifests required by this Appendix may be legible carbon copies, photocopies, or computer printouts that reproduce the data in the format of the uniform manifest.

C. NRC Forms 540, 540A, 541, 541A, 542, and 542A, and the accompanying instructions in hard copy, may be obtained from the Information and Records Management Branch, Office of Information Resources Management, U.S. Nuclear Regulatory Commission, Washington, DC 20555, telephone (301) 415-7232.

D. This Appendix includes information requirements of the Department of Transportation, as codified in 49 CFR Part 172. Information on hazardous, medical, or other waste, required to meet Environmental Protection Agency regulations, as codified in 40 CFR Parts 259, 261, or elsewhere, is not addressed in this Appendix, and shall be provided on the required EPA forms. However, the required EPA forms shall accompany the Uniform Low-Level Radioactive Waste Manifest required by this Appendix and LAC 33:XV.Chapter 4.

E. As used in this Appendix, the following definitions apply:

Chelating Agent—see definition in LAC 33:XV.102.

Chemical Description—a description of the principal chemical characteristics of a low-level radioactive waste.

Computer-Readable Medium—a medium from which the department's computer can transfer the information from the medium into its memory. This medium shall be in an ASCII compatible format.

Consignee—the designated receiver of the shipment of low-level radioactive waste.

Decontamination Facility—a facility operating under a department, Nuclear Regulatory Commission, or agreement state license whose principal purpose is decontamination of equipment or materials to accomplish recycle, reuse, or other waste management objectives and, for purposes of this Appendix, is not considered to be a consignee for LLW shipments.

Disposal Container—a container principally used to confine low-level radioactive waste during disposal operations at a land disposal facility (also see *high integrity container*). Note that for some shipments, the disposal container may be the transport package.

Electronic Media—media from which the department's computer can transfer the information from the media into its memory. This media shall be in an ASCII compatible format.

EPA Identification Number—the number received by a transporter following application to the Administrator of EPA as required by 40 CFR Part 263.

Generator—a licensee operating under a department, Nuclear Regulatory Commission, or agreement state license who is a *waste generator* as defined in this Appendix, or is the licensee to whom waste can be attributed within the context of the Low-Level Radioactive Waste Policy Amendments Act of 1985 (e.g., waste generated as a result of decontamination or recycle activities).

High Integrity Container (HIC)—a container commonly designed to meet the structural stability requirements of LAC 33:XV.499.Appendix E and to meet Department of Transportation requirements for a Type A package.

Land Disposal Facility—see definition in LAC 33:XV.1302.

Low-Level Waste (LLW)—see definition of *waste* in LAC 33:XV.102.

NRC Forms 540, 540A, 541, 541A, 542, and *542A*—official NRC forms referenced in this Appendix. Licensees need not use originals of these NRC forms as long as any substitute forms are equivalent to the original documentation in respect to content, clarity, size, and location of information. Upon agreement between the shipper and consignee, NRC Forms 541 (and 541A) and NRC Forms 542 (and 542A) may be completed, transmitted, and stored in electronic media. The electronic media shall have the capability for producing legible, accurate, and complete records in the format of the uniform manifest.

Package—the assembly of components necessary to ensure compliance with the packaging requirements of DOT regulations, together with its radioactive contents, as presented for transport.

Physical Description—the items called for on NRC Form 541 to describe a low-level radioactive waste.

Residual Waste—low-level radioactive waste resulting from processing or decontamination activities that cannot be easily separated into distinct batches attributable to specific waste generators. This waste is attributable to the processor or decontamination facility, as applicable.

Shipper—the licensed entity (i.e., the waste generator, waste collector, or waste processor) who offers low-level radioactive waste for transportation, typically consigning this type of waste to a licensed waste collector, waste processor, or land disposal facility operator.

Shipping Paper—NRC Form 540 and, if required, NRC Form 540A, which includes the information required by DOT in 49 CFR Part 172.

Source Material—see definition in LAC 33:XV.102.

Special Nuclear Material—see definition in LAC 33:XV.102.

Uniform Low-level Radioactive Waste Manifest or *Uniform Manifest*—the combination of NRC Forms 540, 541, and, if necessary, 542, and their respective continuation sheets as needed, or equivalent.

Waste—see definition in LAC 33.XV.102

Waste Collector—an entity, operating under a department, Nuclear Regulatory Commission, or agreement state license, whose principal purpose is to collect and consolidate waste generated by others, and to transfer this waste, without processing or repackaging the collected waste, to another licensed waste collector, licensed waste processor, or licensed land disposal facility.

Waste Description—the physical, chemical, and radiological description of a low-level radioactive waste as called for on NRC Form 541.

Waste Generator—an entity, operating under a department, Nuclear Regulatory Commission, or agreement state license, who possesses any material or component that contains radioactivity or is radioactively contaminated for which the licensee foresees no further use and transfers this material or component to a licensed land disposal facility or to a licensed waste collector or processor for handling or treatment prior to disposal. A licensee performing processing or decontamination services may be a *waste generator* if the transfer of low-level radioactive waste from its facility is defined as *residual waste*.

Waste Processor—an entity, operating under a department, Nuclear Regulatory Commission, or agreement state license, whose principal purpose is to process, repackage, or otherwise treat low-level radioactive material or waste generated by others prior to eventual transfer of waste to a licensed low-level radioactive waste land disposal facility.

Waste Type—a waste within a disposal container having a unique physical description (i.e., a specific waste descriptor code or description or a waste sorbed on or solidified in a specifically defined media).

F. Information Requirements

1. General Information. The shipper of the radioactive waste shall provide the following information on the uniform manifest:

a. the name, facility address, and telephone number of the licensee shipping the waste;

b. an explicit declaration indicating whether the shipper is acting as a waste generator, collector, processor, or a combination of these identifiers for purposes of the manifested shipment; and

c. the name, address, and telephone number or the name and EPA identification number for the carrier transporting the waste.

2. Shipment Information. The shipper of the radioactive waste shall provide the following information regarding the waste shipment on the uniform manifest:

a. the date of the waste shipment;

b. the total number of packages/disposal containers;

c. the total disposal volume and disposal weight in the shipment;

d. the total radionuclide activity in the shipment;

e. the activity of each of the radionuclides, H-3, C-14, Tc-99, and I-129, contained in the shipment; and

f. the total masses of U-233, U-235, and plutonium in special nuclear material, and the total mass of uranium and thorium in source material.

3. Disposal Container and Waste Information. The shipper of the radioactive waste shall provide the following information on the uniform manifest regarding the waste and each disposal container of waste in the shipment:

a. an alphabetic or numeric identification that uniquely identifies each disposal container in the shipment;

b. a physical description of the disposal container, including the manufacturer and model of any high integrity container;

c. the volume displaced by the disposal container;

d. the gross weight of the disposal container, including the waste;

e. for waste consigned to a disposal facility, the maximum radiation level at the surface of each disposal container;

f. a physical and chemical description of the waste;

g. the total weight percentage of chelating agent for any waste containing more than 0.1 percent chelating agent by weight, plus the identity of the principal chelating agent;

h. the approximate volume of waste within a container;

i. the sorbing or solidification media, if any, and the identity of the solidification media vendor and brand name;

j. the identities and activities of individual radionuclides contained in each container, the masses of U-233, U-235, and plutonium in special nuclear material, and the masses of uranium and thorium in source material. For discrete waste types (i.e., activated materials, contaminated equipment, mechanical filters, sealed source/devices, and wastes in solidification/stabilization media), the identities and activities of individual radionuclides associated with or contained on these waste types within a disposal container shall be reported;

k. the total radioactivity within each container; and

l. for wastes consigned to a disposal facility, the classification of the waste in accordance with LAC 33:XV.499.Appendix E. Waste not meeting the structural stability requirements of LAC 33:XV.499.Appendix E shall be identified.

4. Uncontainerized Waste Information. The shipper of the radioactive waste shall provide the following information on the uniform manifest regarding a waste shipment delivered without a disposal container:

a. the approximate volume and weight of the waste;

b. a physical and chemical description of the waste;

c. the total weight percentage of chelating agent if the chelating agent exceeds 0.1 percent by weight, plus the identity of the principal chelating agent;

d. for waste consigned to a disposal facility, the classification of the waste in accordance with LAC 33:XV.499.Appendix E. Waste not meeting the structural stability requirements of LAC 33:XV.499.Appendix E shall be identified;

e. the identities and activities of individual radionuclides contained in the waste, the masses of U-233, U-235, and plutonium in special nuclear material, and the masses of uranium and thorium in source material; and

f. for wastes consigned to a disposal facility, the maximum radiation levels at the surface of the waste.

5. Multi-Generator Disposal Container Information. This Paragraph applies to disposal containers enclosing mixtures of waste originating from different generators. (Note*:* The origin of the LLW resulting from a processor's activities may be attributable to one or more *generators*, including *waste generators*, as defined in this Appendix.) It also applies to mixtures of wastes shipped in an uncontainerized form, for which portions of the mixture within the shipment originate from different generators. The shipper of radioactive waste shall provide the following information on the manifest regarding waste shipments containing mixtures of waste originating from multiple generators:

a. for homogeneous mixtures of waste, such as incinerator ash, the waste description applicable to the mixture and the volume of the waste attributed to each generator;

b. for heterogeneous mixtures of waste, such as the combined products from a large compactor, identify each generator contributing waste to the disposal container and, for discrete waste types (e.g., activated materials, contaminated equipment, mechanical filters, sealed source/devices, and wastes in solidification/stabilization media), the identities and activities of individual radionuclides contained on these waste types within the disposal container. For each generator, provide the following:

i. the volume of waste within the disposal container;

ii. a physical and chemical description of the waste, including the solidification agent, if any;

iii. the total weight percentage of chelating agents for any disposal container containing more than 0.1 percent chelating agent by weight, plus the identity of the principal chelating agent;

iv. the sorbing or solidification media, if any, and the identity of the solidification media vendor and brand name if the media is claimed to meet stability requirements in LAC 33:XV.499.Appendix E; and

v. radionuclide identities and activities contained in the waste, the masses of U-233, U-235, and plutonium in special nuclear material, and the masses of uranium and thorium in source material if contained in the waste.

G. Certification. An authorized representative of the waste generator, processor, or collector shall certify, by signing and dating the shipment manifest, that the transported materials are properly classified, described, packaged, marked, and labeled and are in proper condition for transportation according to the applicable regulations of the U.S. Department of Transportation and the department. A collector, in signing the certification, is certifying that nothing has been done to the collected waste that would invalidate the waste generator's certification.

H. Control and Tracking

1. Any licensee who transfers radioactive waste to a land disposal facility or a licensed waste collector or any licensee who transfers waste to a licensed waste processor for waste treatment or repackaging shall comply with the following requirements:

a. prepare all wastes so that the waste is classified and meets the waste characteristics requirements according to LAC 33:XV.499.Appendix E;

b. label each disposal container (or transport package if potential radiation hazards preclude labeling of the individual disposal container) of waste to identify whether it is Class A waste, Class B waste, Class C waste, or greater than Class C waste, in accordance with LAC 33:XV.499.Appendix E;

c. conduct a quality assurance program to assure compliance with LAC 33:XV.499.Appendix E (the program shall include management evaluation of audits);

d. prepare the NRC Uniform Low-Level Radioactive Waste Manifest as required by this Appendix;

e. forward a copy or electronically transfer the Uniform Low-Level Radioactive Waste Manifest to the intended consignee so that either: receipt of the manifest precedes the LLW shipment; or the manifest is delivered to the consignee with the waste at the time the waste is transferred to the consignee. Using both options is also acceptable;

f. include NRC Form 540 (and NRC Form 540A, if required) with the shipment regardless of the option chosen in Subparagraph H.1.e of this Appendix;

g. receive acknowledgement of the receipt of the shipment in the form of a signed copy of NRC Form 540;

h. retain a copy of or electronically store the Uniform Low-Level Radioactive Waste Manifest and documentation of acknowledgement of receipt as the record of transfer of licensed material as required by LAC 33:XV.Chapter 3; and

i. for any shipments or any part of a shipment for which acknowledgement of receipt has not been received within the times set forth in this Appendix, conduct an investigation in accordance with Paragraph H.5 of this Appendix.

2. Any waste collector licensee who handles only prepackaged waste shall:

a. acknowledge receipt of the waste from the shipper within one week of receipt by returning a signed copy of NRC Form 540;

b. prepare a new manifest to reflect consolidated shipments that meet the requirements of this Appendix. The waste collector shall ensure that, for each container of waste in the shipment, the manifest identifies the generator of that container of waste;

c. forward a copy or electronically transfer the Uniform Low-Level Radioactive Waste Manifest to the intended consignee so that either: receipt of the manifest precedes the LLW shipment; or the manifest is delivered to the consignee with the waste at the time the waste is transferred to the consignee. Using both options is also acceptable;

d. include NRC Form 540 (and NRC Form 540A, if required) with the shipment regardless of the option chosen in Subparagraph H.2.c of this Appendix;

e. receive acknowledgement of the receipt of the shipment in the form of a signed copy of NRC Form 540;

f. retain a copy of or electronically store the Uniform Low-Level Radioactive Waste Manifest and documentation of acknowledgement of receipt as the record of transfer of licensed material, as required by LAC 33:XV.Chapter 3;

g. for any shipments or any part of a shipment for which acknowledgement of receipt has not been received within the times set forth in this Appendix, conduct an investigation in accordance with Paragraph H.5 of this Appendix; and

h. notify the shipper and the Office of Environmental Compliance, Emergency and Radiological Services Division, when any shipment, or part of a shipment, has not arrived within 60 days after receipt of an advance manifest, unless notified by the shipper that the shipment has been canceled.

3. Any licensed waste processor who treats or repackages waste shall:

a. acknowledge receipt of the waste from the shipper within one week of receipt by returning a signed copy of NRC Form 540;

b. prepare a new manifest that meets the requirements of this Appendix. Preparation of the new manifest reflects that the processor is responsible for meeting these requirements. For each container of waste in the shipment, the manifest shall identify the waste generators, the preprocessed waste volume, and the other information as required in Paragraph F.5 of this Appendix;

c. prepare all wastes so that the waste is classified and meets the waste characteristics requirements according to LAC 33:XV.499.Appendix E;

d. label each package of waste to identify whether it is Class A waste, Class B waste, or Class C waste, in accordance with LAC 33:XV.499.Appendix E;

e. conduct a quality assurance program to assure compliance with LAC 33:XV.499.Appendix E (the program shall include management evaluation of audits);

f. forward a copy or electronically transfer the Uniform Low-Level Radioactive Waste Manifest to the intended consignee so that either: receipt of the manifest precedes the LLW shipment; or the manifest is delivered to the consignee with the waste at the time the waste is transferred to the consignee. Using both options is also acceptable;

g. include NRC Form 540 (and NRC Form 540A, if required) with the shipment regardless of the option chosen in Subparagraph H.3.f of this Appendix;

h. receive acknowledgement of the receipt of the shipment in the form of a signed copy of NRC Form 540;

i. retain a copy of or electronically store the Uniform Low-Level Radioactive Waste Manifest and documentation of acknowledgement of receipt as the record of transfer of licensed material, as required by LAC 33:XV.Chapter 3;

j. for any shipment or any part of a shipment for which acknowledgement of receipt has not been received within the times set forth in this Appendix, conduct an investigation in accordance with Paragraph H.5 of this Appendix; and

k. notify the shipper and the Office of Environmental Compliance, Emergency and Radiological Services Division, when any shipment, or part of a shipment, has not arrived within 60 days after receipt of an advance manifest, unless notified by the shipper that the shipment has been canceled.

4. The land disposal facility operator shall:

a. acknowledge receipt of the waste within one week of receipt by returning, as a minimum, a signed copy of NRC Form 540 to the shipper. The shipper to be notified is the licensee who last possessed the waste and transferred the waste to the operator. If any discrepancy exists between materials listed on the Uniform Low-Level Radioactive Waste Manifest and materials received, copies or electronic transfer of the affected forms shall be returned indicating the discrepancy;

b. maintain copies of all completed manifests and electronically store the information required by LAC 33:XV.1333.G until the department terminates the license; and

c. notify the shipper and the Office of Environmental Compliance, Emergency and Radiological Services Division, when any shipment, or part of a shipment, has not arrived within 60 days after receipt of an advance manifest, unless notified by the shipper that the shipment has been canceled.

5. Any shipment or part of a shipment for which acknowledgement is not received within the times set forth in this Appendix shall:

a. be investigated by the shipper if the shipper has not received notification or receipt within 20 days after transfer; and

b. be traced and reported. The investigation shall include tracing the shipment and filing a report with the Office of Environmental Compliance, Emergency and Radiological Services Division. Each licensee who conducts a trace investigation shall file a written report with the Office of Environmental Compliance, Emergency and Radiological Services Division, within two weeks of completion of the investigation.

Appendix E
Classification and Characteristics of Low-Level Radioactive Waste

A. Classification of Radioactive Waste for Land Disposal

1. Considerations. Determination of the classification of radioactive waste involves two considerations. First, consideration must be given to the concentration of long-lived radionuclides (and their shorter-lived precursors) whose potential hazard will persist long after such precautions as institutional controls, improved waste form, and deeper disposal have ceased to be effective. These precautions delay the time when long-lived radionuclides could cause exposures. In addition, the magnitude of the potential dose is limited by the concentration and availability of the radionuclide at the time of exposure. Second, consideration must be given to the concentration of shorter-lived radionuclides for which requirements on institutional controls, waste form, and disposal methods are effective.

2. Classes of Waste

a. Class A waste is waste that is usually segregated from other waste classes at the disposal site. The physical form and characteristics of Class A waste must meet the minimum requirements set forth in Paragraph B.1 of this Appendix. If Class A waste also meets the stability requirements set forth in Paragraph B.2 of this Appendix, it is not necessary to segregate the waste for disposal.

b. Class B waste is waste that must meet more rigorous requirements on waste form to ensure stability after disposal. The physical form and characteristics of Class B waste must meet both the minimum and stability requirements set forth in Subsection B of this Appendix.

c. Class C waste is waste that not only must meet more rigorous requirements on waste form to ensure stability but also requires additional measures at the disposal facility to protect against inadvertent intrusion. The physical form and characteristics of Class C waste must meet both the minimum and stability requirements set forth in Subsection B of this Appendix.

3. Classification Determined by Long-Lived Radionuclides. If the radioactive waste contains only radionuclides listed in Table I, classification shall be determined as follows:

a. if the concentration does not exceed 0.1 times the value in Table I, the waste is Class A;

b. if the concentration exceeds 0.1 times the value in Table I, but does not exceed the value in Table I, the waste is Class C;

c. if the concentration exceeds the value in Table I, the waste is not generally acceptable for land disposal; or

d. for wastes containing mixtures of radionuclides listed in Table I, the total concentration shall be determined by the sum of fractions rule described in Paragraph A.7 of this Appendix.

Table I

Radionuclide	Concentration	
	curie/cubic meter[a]	nanocurie/ gram[b]
C-14	8	
C-14 in activated metal	80	
Ni-59 in activated metal	220	
Nb-94 in activated metal	0.2	
Tc-99	3	
I-129	0.08	
Alpha emitting transuranic radionuclides with half-life greater than five years		100
Pu-241		3,500
Cm-242		20,000
Ra-226		100

[a]To convert the Ci/m^3 values to gigabecquerel (GBq) per cubic meter, multiply the Ci/m^3 value by 37.

[b]To convert the nCi/g values to becquerel (Bq) per gram, multiply the nCi/g value by 37.

4. Classification Determined by Short-lived Radionuclides. If the waste does not contain any of the radionuclides listed in Table I, classification shall be determined based on the concentrations shown in Table II. However, as specified in Paragraph A.6 of this Appendix, if radioactive waste does not contain any nuclides listed in either Table I or II, it is Class A. Determine classification as follows:

a. if the concentration does not exceed the value in Column 1, the waste is Class A;

b. if the concentration exceeds the value in Column 1 but does not exceed the value in Column 2, the waste is Class B;

c. if the concentration exceeds the value in Column 2 but does not exceed the value in Column 3, the waste is Class C;

d. if the concentration exceeds the value in Column 3, the waste is not generally acceptable for near-surface disposal; or

e. For wastes containing mixtures of the radionuclides listed in Table II, the total concentration shall be determined by the sum of fractions rule described in Paragraph A.7 of this Appendix.

Table II			
Radionuclide	**Concentration (curie/cubic meter*)**		
	Column 1	**Column 2**	**Column 3**
Total of all radionuclides with less than 5-year half-life	700	*	*
H-3	40	*	*
Co-60	700	*	*
Ni-63	3.5	70	700
Ni-63 in activated metal	35	700	7000
Sr-90	0.04	150	7000
Cs-137	1	44	4600

*NOTE: To convert the Ci/m^3 value to gigabecquerel (GBq) per cubic meter, multiply the Ci/m^3 value by 37. There are no limits established for these radionuclides in Class B or C wastes. Practical considerations such as the effects of external radiation and internal heat generation on transportation, handling, and disposal will limit the concentrations for these wastes. These wastes shall be Class B unless the concentrations of other radionuclides in Table II determine the waste to be Class C independent of these radionuclides.

5. Classification Determined by Both Long- and Short-lived Radionuclides. If the radioactive waste contains a mixture of radionuclides, some of which are listed in Table I and some of which are listed in Table II, classification shall be determined as follows:

a. if the concentration of a radionuclide listed in Table I is less than 0.1 times the value listed in Table I, the class shall be that determined by the concentration of radionuclides listed in Table II; or

b. if the concentration of a radionuclide listed in Table I is equal to or exceeds 0.1 times the value listed in Table I, but does not exceed the value in Table I, the waste shall be Class C, provided the concentration of radionuclides listed in Table II does not exceed the value shown in Column 3 of Table II.

6. Classification of Wastes with Radionuclides Other Than Those Listed in Tables I and II. If the waste does not contain any radionuclides listed in either Table I or II, it is Class A.

7. The Sum of the Fractions Rule for Mixtures of Radionuclides. For determining classification for waste that contains a mixture of radionuclides, it is necessary to determine the sum of fractions by dividing each radionuclide's concentration by the appropriate limit and adding the resulting values. The appropriate limits must all be taken from the same column of the same table. The sum of the fractions for the column must be less than 1.0 if the waste class is to be determined by that column. Example: A waste contains Sr-90 in a concentration of 1.85 TBq/m^3 (50 Ci/m^3) and Cs-137 in a concentration of 814 GBq/m^3 (22 Ci/m^3). Since the concentrations both exceed the values in Column 1, Table II, they must be compared to Column 2 values. For Sr-90 fraction, 50/150 = 0.33., for Cs-137 fraction, 22/44 = 0.5; the sum of the fractions = 0.83. Since the sum is less than 1.0, the waste is Class B.

8. Determination of Concentrations in Wastes. The concentration of a radionuclide may be determined by indirect methods such as use of scaling factors which relate the inferred concentration of one radionuclide to another that is measured, or radionuclide material accountability, if there is reasonable assurance that the indirect methods can be correlated with actual measurements. The concentration of a radionuclide may be averaged over the volume of the waste, or weight of the waste if the units are expressed as becquerel (nanocurie) per gram.

B. Radioactive Waste Characteristics

1. The following are minimum requirements for all classes of waste and are intended to facilitate handling and provide protection of health and safety of personnel at the disposal site:

a. wastes shall be packaged in conformance with the conditions of the license issued to the site operator to which the waste will be shipped. Where the conditions of the site license are more restrictive than the provisions of this Chapter, the site license conditions shall govern;

b. wastes shall not be packaged for disposal in cardboard or fiberboard boxes;

c. liquid waste shall be packaged in sufficient absorbent material to absorb twice the volume of the liquid;

d. solid waste containing liquid shall contain as little free-standing and non-corrosive liquid as is reasonably achievable, but in no case shall the liquid exceed one percent of the volume;

e. waste shall not be readily capable of detonation or of explosive decomposition or reaction at normal pressures and temperatures, or of explosive reaction with water;

f. waste shall not contain, or be capable of generating, quantities of toxic gases, vapors, or fumes harmful to persons transporting, handling, or disposing of the waste. This does not apply to radioactive gaseous waste packaged in accordance with Subparagraph B.1.h of this Appendix;

g. waste must not be pyrophoric. Pyrophoric materials contained in wastes shall be treated, prepared, and packaged to be nonflammable[1];

h. wastes in a gaseous form shall be packaged at an absolute pressure that does not exceed 1.5 atmospheres at 20°C. Total activity shall not exceed 3.7 TBq (100 Ci) per container; and

i. wastes containing hazardous, biological, pathogenic, or infectious material shall be treated to reduce to the maximum extent practicable the potential hazard from the non-radiological materials.

2. Stability is intended to ensure that the waste does not degrade and affect overall stability of the site through slumping, collapse, or other failure of the disposal unit and thereby lead to water infiltration. Stability is also a factor in limiting exposure to an inadvertent intruder, since it provides a recognizable and nondispersible waste. The following requirements are intended to provide stability of the waste:

a. waste shall have structural stability. A structurally stable waste form will generally maintain its physical dimensions and its form, under the expected disposal conditions such as weight of overburden and compaction equipment, the presence of moisture, and microbial activity and internal factors such as radiation effects and chemical changes. Structural stability can be provided by the waste form itself, processing the waste to a stable form, or placing the waste in a disposal container or structure that provides stability after disposal;

b. notwithstanding the provisions in Subparagraphs B.1.c and d of this Appendix, liquid wastes, or wastes containing liquid, shall be converted into a form that contains as little freestanding and noncorrosive liquid as is reasonably achievable, but in no case shall the liquid exceed 1 percent of the volume of the waste when the waste is in a disposal container designed to ensure stability, or 0.5 percent of the volume of the waste for waste processed to a stable form; and

c. void spaces within the waste and between the waste and its package shall be reduced to the extent practicable.

C. Labeling. Each package of waste shall be clearly labeled to identify whether it is Class A, Class B, or Class C waste, in accordance with Subsection A of this Appendix.

[1] See LAC 33:XV.102 for definition of pyrophoric.

AUTHORITY NOTE: Promulgated in accordance with R.S. 30:2001 et seq., and in particular 2104.

HISTORICAL NOTE: Promulgated by the Department of Environmental Quality, Nuclear Energy Division, LR 13:569 (October 1987), amended by the Office of Air Quality and Radiation Protection, Radiation Protection Division, LR 19:1421 (November 1993), LR 20:653 (June 1994), LR 22:973 (October 1996), LR 24:2096 (November 1998), amended by the Office of Environmental Assessment, Environmental Planning Division, LR 26:2580 (November 2000), LR 28:1012 (May 2002), amended by the Office of Environmental Assessment, LR 31:48 (January 2005),

amended by the Office of the Secretary, Legal Affairs Division, LR 31:2530 (October 2005).

Chapter 5. Radiation Safety Requirements for Industrial Radiographic Operations

§501. Purpose

A. The regulations in this Chapter establish radiation safety requirements for persons utilizing sources of radiation for industrial radiography. The requirements of this Chapter are in addition to, and not in substitution for, applicable requirements of LAC 33:XV.Chapters 1, 2, 3, 4, 10, and 15.

AUTHORITY NOTE: Promulgated in accordance with R.S. 30:2001 et seq.

HISTORICAL NOTE: Promulgated by the Department of Environmental Quality, Nuclear Energy Division, LR 13:569 (October 1987), amended by the Office of Air Quality and Radiation Protection, Radiation Protection Division, LR 20:653 (June 1994).

§502. Scope

A. The regulations in this Chapter apply to all licensees or registrants who use sources of radiation for industrial radiography. Radiation machines and sealed radioactive sources are both covered by this Chapter, except for sections applicable only to sealed radioactive sources.

AUTHORITY NOTE: Promulgated in accordance with R.S. 30:2001 et seq.

HISTORICAL NOTE: Promulgated by the Department of Environmental Quality, Nuclear Energy Division, LR 13:569 (October 1987), amended by the Office of Air Quality and Radiation Protection, Radiation Protection Division, LR 20:653 (June 1994).

§503. Definitions

A. As used in this Chapter, the following definitions apply.

Annual Refresher Safety Training—a review conducted or provided by the licensee for its employees on radiation safety aspects of industrial radiography. The review may include, as appropriate, the results of internal inspections, new procedures or equipment, new or revised regulations, and accidents or errors that have been observed, and should also provide opportunities for employees to ask safety questions.

Associated Equipment—equipment that is used in conjunction with a radiographic exposure device to make radiographic exposures, that drives, guides, or comes in contact with the source (e.g., guide tube, control tube, control [drive] cable, removable source stop, "J" tube, and collimator when it is used as an exposure head).

Cabinet Radiography—industrial radiography conducted in an enclosure or cabinet so shielded that every location on the exterior meets the conditions specified in LAC 33:XV.421 for an unrestricted area.

Cabinet X-Ray System—an X-ray system with the X-ray tube installed in an enclosure (hereinafter termed *Cabinet*) that, independently of existing architectural structures except the floor on which it may be placed, is intended to contain at least that portion of a material being irradiated, provides radiation attenuation, and excludes personnel from its interior during generation of X-radiation. Included are all X-ray systems designed primarily for the inspection of carry-on baggage at airline, railroad, and bus terminals and in similar facilities. An X-ray tube used within a shielded part of a building, or X-ray equipment that may temporarily or occasionally incorporate portable shielding, is not considered a cabinet X-ray system.

Certified Cabinet X-Ray System—a cabinet X-ray system that has been certified in accordance with 21 CFR 1010.2 as having been manufactured, assembled, and maintained pursuant to the provisions of 21 CFR 1020.40.

Certifying Entity—an independent certifying organization meeting the requirements in 10 CFR 34 Appendix A, or an agreement state meeting the requirements in 10 CFR 34 Appendix A, Parts II and III.

Collimator—a device used to limit the size, shape, and direction of the primary radiation beam.

Control (Drive) Cable—the cable that is connected to the source assembly and used to drive the source to and from the exposure location.

Control Drive Mechanism—a device that enables the source assembly to be moved to and from the exposure device.

Control Tube—a protective sheath for guiding the control cable. The control tube connects the control drive mechanism to the radiographic exposure device.

Enclosed Radiography—industrial radiography conducted in an enclosed cabinet or room, including cabinet radiography and shielded room radiography.

Exposure Head—a device that locates the gamma radiography sealed source in the selected working position. (An exposure head is also known as a source stop.)

Field Station—a facility where licensed material may be stored or used and from which equipment is dispatched.

Guide Tube (Projection Sheath)—a flexible or rigid tube (i.e., "J" tube) for guiding the source assembly and the attached control cable from the exposure device to the exposure head. The guide tube may also include the connections necessary for attachment to the exposure device and to the exposure head.

Hands-On Experience—experience in all of those areas considered to be directly involved in the radiography process.

Independent Certifying Organization—an independent organization that meets all of the criteria of LAC 33:XV.599.Appendix A.

Industrial Radiography—the examination of the macroscopic structure of materials by nondestructive

methods utilizing sources of radiation to produce radiographic images.

Instructor—any individual who has been authorized by the department to provide instruction to radiographer trainees in accordance with LAC 33:XV.575.A.

Lay-Barge Radiography—industrial radiography performed on any water vessel used for laying pipe.

Lixiscope—a portable light-intensified imaging device using a sealed source.

Offshore Platform Radiography—industrial radiography conducted from a platform over a body of water.

Permanent Radiographic Installation—an enclosed shielded room, cell, or vault, not located at a temporary jobsite, in which radiography is performed.

Personal Supervision—guidance and instruction provided to a radiographer trainee by an instructor who is physically present while sources of radiation are being used.

Practical Examination—a demonstration through practical application of the safety rules and principles in industrial radiography, including use of all appropriate equipment and procedures.

Radiation Safety Officer for Industrial Radiography—an individual with the responsibility for the overall radiation safety program on behalf of the licensee and who meets the requirements of LAC 33:XV.573.E.

Radiographer—any individual who has successfully completed the training, testing, and documentation requirements contained in LAC 33:XV.575.A.

Radiographer Trainee—any individual who has satisfied the conditions of LAC 33:XV.575.B.

Radiographic Exposure Device—an X-ray tube or any instrument containing a sealed source fastened or contained therein, in which the sealed source or shielding thereof may be moved, or otherwise changed, from a shielded to unshielded position for purposes of making a radiographic exposure.

Radiographic Operations—all activities associated with the presence of radioactive sources in a radiographic exposure device during use of the device or transport (except when being transported by a common or contract transport), to include surveys to confirm the adequacy of boundaries, setting up equipment, and any activity inside restricted area boundaries.

Radiographic Personnel—any radiographer, radiographer instructor, or radiographer trainee.

Residential Location—any area where structures in which people lodge or live are located, and the grounds on which such structures are located including, but not limited to, houses, apartments, condominiums, and garages.

S-Tube—a tube through which the radioactive source travels when inside a radiographic exposure device.

Shielded Position—the location within the radiographic exposure device or storage container that, by manufacturer's design, is the proper location for storage of the sealed source.

Shielded-Room Radiography—industrial radiography conducted in a room so shielded that every location on the exterior meets the conditions specified in LAC 33:XV.421 for an unrestricted area.

Source Assembly—an assembly that consists of the sealed source and a connector that attaches the source to the control cable. The source assembly may also include a stop ball used to secure the source in the shielded position.

Source Changer—a device designed and used for replacement of sealed sources in radiographic exposure devices, including those source changers also used for transporting and storage of sealed sources.

Storage Area—any location, facility, or vehicle that is used to store, to transport, or to secure a radiographic exposure device, a storage container, or a sealed source when it is not in use and that is locked or has a physical barrier to prevent accidental exposure, tampering with, or unauthorized removal of the device, container, or source.

Storage Container—a device in which one or more sealed sources are transported or stored.

Temporary Job Site—any location where industrial radiography is performed other than the location(s) listed in a specific license or registration certificate for non-licensed sources of radiation.

Transport Container—a package that is designed to provide radiation safety and security when sealed sources are transported and which meets all applicable requirements of the U.S. Department of Transportation.

Underwater Radiography—industrial radiography performed when the radiographic exposure device and/or related equipment are beneath the surface of the water.

AUTHORITY NOTE: Promulgated in accordance with R.S. 30:2001 et seq.

HISTORICAL NOTE: Promulgated by the Department of Environmental Quality, Nuclear Energy Division, LR 13:569 (October 1987), amended by the Office of Air Quality and Radiation Protection, Radiation Protection Division, LR 20:653 (June 1994), LR 23:1138 (September 1997), amended by the Office of Environmental Assessment, Environmental Planning Division, LR 26:2581 (November 2000), LR 26:2772 (December 2000), LR 27:1231 (August 2001), LR 29:34 (January 2003), LR 30:1189 (June 2004).

§504. Exemptions

A. Except for the requirements of LAC 33:XV.589.B and C, certified cabinet X-ray systems designed to exclude individuals from the interior of the cabinet are exempt from the requirements of this Chapter.

B. Industrial uses of lixiscopes are exempt from the requirements of this Chapter.

AUTHORITY NOTE: Promulgated in accordance with R.S. 30:2001 et seq.

HISTORICAL NOTE: Promulgated by the Department of Environmental Quality, Office of Air Quality and Radiation Protection, Radiation Protection Division, LR 20:653 (June 1994).

§505. Form of Records

A. Each record required by this Chapter must be legible throughout the specified retention period. The record may be the original or a reproduced copy or a microform provided that the copy or microform is authenticated by authorized personnel and that the microform is capable of reproducing a clear copy throughout the required retention period. The record may also be stored in electronic media with the capability for producing legible, accurate, and complete records during the required retention period. Records, such as letters, drawings, and specifications, must include all pertinent information, such as stamps, initials, and signatures. The licensee or registrant shall maintain adequate safeguards against tampering with and loss of records.

AUTHORITY NOTE: Promulgated in accordance with R.S. 30:2101 et seq.

HISTORICAL NOTE: Promulgated by the Department of Environmental Quality, Office of Environmental Assessment, Environmental Planning Division, LR 27:1232 (August 2001).

Subchapter A. Equipment Control

§540. Limits on Levels of Radiation for Radiographic Source Changers and Storage Containers

A. The maximum exposure rate limits for storage containers and source changers are 2 millisieverts (200 millirem) per hour at any exterior surface and 0.1 millisieverts (10 millirem) per hour at 1 meter from any exterior surface with the sealed source in the shielded position.

AUTHORITY NOTE: Promulgated in accordance with R.S. 30:2001 et seq.

HISTORICAL NOTE: Promulgated by the Department of Environmental Quality, Nuclear Energy Division, LR 13:569 (October 1987), amended by the Office of Air Quality and Radiation Protection, Radiation Protection Division, LR 20:653 (June 1994), amended by the Office of Environmental Assessment, Environmental Planning Division, LR 27:1232 (August 2001).

§541. Locking of Sources of Radiation

A. Each radiographic exposure device must have a lock or outer locked container designed to prevent unauthorized or accidental removal of the sealed source from its shielded position. The exposure device and/or its container must be kept locked, with the key removed at all times for a keyed-lock, when not under the direct surveillance of a radiographer or a trainee except at permanent radiographic installations in accordance with LAC 33:XV.585. In addition, during radiographic operations the sealed source assembly must be secured in the shielded position each time the source is returned to that position.

B. Each sealed source storage container and source changer must have a lock or outer locked container designed to prevent unauthorized or accidental removal of the sealed source from its shielded position. Storage containers and source changers must be kept locked, with the key removed at all times for a keyed-lock, when containing sealed sources, except when under the direct surveillance of a radiographer or trainee.

AUTHORITY NOTE: Promulgated in accordance with R.S. 30:2001 et seq.

HISTORICAL NOTE: Promulgated by the Department of Environmental Quality, Nuclear Energy Division, LR 13:569 (October 1987), amended by the Office of Air Quality and Radiation Protection, Radiation Protection Division, LR 20:653 (June 1994), amended by the Office of Environmental Assessment, Environmental Planning Division, LR 27:1232 (August 2001), LR 28:306 (February 2002), LR 30:1189 (June 2004).

§542. Storage and Transportation Precautions

A. Locked radiographic exposure devices, source changers, storage containers, and radiation machines shall be physically secured to prevent tampering or removal by unauthorized personnel. The licensee shall store radioactive material in a manner that will minimize danger from explosion or fire.

B. The licensee may not use a source changer or a container to store radioactive material unless the source changer or container has securely attached to it a durable, legible, and clearly visible label as specified in LAC 33.XV.453. Radiographic exposure devices, source changers, or transport containers that contain radioactive material shall not be stored in residential locations. This requirement does not apply to storage of radioactive material in a vehicle in transit for use at temporary job sites, if the licensee complies with Subsection C of this Section, and if the vehicle does not constitute a permanent storage location as described in Subsection D of this Section.

C. If a vehicle is to be used for storage of radioactive material, a vehicle survey shall be performed after securing radioactive material in the vehicle and before transport to ensure that radiation levels do not exceed the limits specified in LAC 33:XV.421.A at the exterior surface of the vehicle.

1. The licensee shall lock and physically secure the transport package containing licensed material in the transporting vehicle to prevent accidental loss, tampering, or unauthorized removal of the licensed material from the vehicle.

2. The licensee may not transport licensed material unless the material is packaged and the package is labeled, marked, and accompanied by appropriate shipping papers in accordance with LAC 33:XV.Chapter 15.

D. A storage or use location is permanent if radioactive material is stored at the location for more than 90 days and any one or more of the following applies to the location:

1. telephone service is established by the licensee;

2. industrial radiographic services are advertised for or from the location; or

3. industrial radiographic operations are conducted at other sites due to arrangements made from the location.

AUTHORITY NOTE: Promulgated in accordance with R.S. 30:2001 et seq.

HISTORICAL NOTE: Promulgated by the Department of Environmental Quality, Nuclear Energy Division, LR 13:569 (October 1987), amended by the Office of Air Quality and Radiation Protection, Radiation Protection Division, LR 20:653 (June 1994), amended by the Office of Environmental Assessment, Environmental Planning Division, LR 27:1232 (August 2001).

§543. Radiation Survey Instruments

A. The licensee or registrant shall maintain sufficient calibrated and operable radiation survey instruments at each location where radioactive material is present to make physical radiation surveys as required by this Chapter and LAC 33:XV.430. Instrumentation required by this Section shall have a range such that 0.02 millisieverts (2 millirems) per hour through 0.01 sievert (1 rem) per hour can be measured.

B. Each radiation survey instrument shall be calibrated:

1. at energies appropriate for use and at intervals not to exceed six months and after each instrument servicing;

2. such that accuracy within ±20 percent can be demonstrated; and

3. at two points located approximately 1/3 and 2/3 of full-scale on each scale for linear scale instruments; at midrange of each decade, and at two points of at least one decade for logarithmic scale instruments; and at three points between 0.02 and 10 millisieverts (2 and 1000 millirems) per hour for digital instruments.

C. Records of these calibrations shall be maintained for three years after the calibration date for inspection by the department.

D. Each radiation survey instrument shall be checked with a radiation source at the beginning of each day of use and at the beginning of each work shift to ensure it is operating properly. Records of the checks shall be maintained for three years. If equipment problems are found, the equipment must be removed from service until repaired.

AUTHORITY NOTE: Promulgated in accordance with R.S. 30:2001 et seq.

HISTORICAL NOTE: Promulgated by the Department of Environmental Quality, Nuclear Energy Division, LR 13:569 (October 1987), amended by the Office of Air Quality and Radiation Protection, Radiation Protection Division, LR 20:653 (June 1994), LR 23:1138 (September 1997), amended by the Office of Environmental Assessment, Environmental Planning Division, LR 26:2581 (November 2000), LR 27:1233 (August 2001), LR 29:1469 (August 2003).

§544. Leak Testing, Repair, Tagging, Opening, Modification, Replacement, and Records of Receipt and Transfer of Sealed Sources

A. The replacement of any sealed source fastened to or contained in a radiographic exposure device and leak testing, repair, tagging, opening, or any other modification of any sealed source shall be performed only by persons specifically authorized to do so by the administrative authority, the U.S. Nuclear Regulatory Commission, or any other agreement state.

B. Each sealed source shall be tested for leakage at intervals not to exceed six months. In the absence of a certificate from a transferor that a test has been made within the six-month period prior to the transfer, the sealed source shall not be put into use until tested.

C. The leak test shall be capable of detecting the presence of 0.005 microcurie (185 Bq) of removable contamination on the sealed source. An acceptable leak test for sealed sources in the possession of a radiography licensee would be to test at the nearest accessible point to the sealed source storage position, or other appropriate measuring point, by a procedure which has been approved in accordance with LAC 33:XV.326.E.1.e. Records of leak test results shall be kept in units of microcuries (becquerels) and maintained for inspection by the department for three years.

D. Any test conducted pursuant to LAC 33:XV.544.B and C that reveals the presence of 0.005 microcurie (185 Bq) or more of removable radioactive material shall be considered evidence that the sealed source is leaking. The licensee shall immediately withdraw the equipment involved from use and shall cause it to be decontaminated and repaired or to be disposed of in accordance with LAC 33:XV. Within five calendar days after obtaining results of the test, the licensee shall file a written report with the Office of Environmental Compliance describing the equipment involved, the test results, and the corrective action taken.

E. Each radiographic exposure device shall have permanently attached to it a durable label which has, as a minimum, the instruction: "Danger—Radioactive Material—Do Not Handle—Notify Civil Authorities if Found."

F. Each exposure device using depleted uranium (DU) shielding and an “S” tube configuration must be tested for DU contamination at intervals not to exceed 12 months. The analysis must be capable of detecting the presence of 0.005 microcuries (185 Bq) of radioactive material on the test sample and must be performed by a person specifically authorized by the administrative authority, U.S. Nuclear Regulatory Commission, or any other agreement state to perform the analysis. Should such testing reveal the presence of 0.005 microcuries (185 Bq) or more of removable DU contamination, the exposure device must be removed from use until an evaluation of the wear on the S-tube has been made. Should the evaluation reveal that the S-tube is worn through, the device may not be used again. DU shielded devices do not have to be tested for DU contamination while in storage and not in use. Before using or transferring such a device, however, the device must be tested for DU contamination if the interval of storage exceeded 12 months. A record of the DU leak test must be made in accordance with Subsection C of this Section.

G. Each licensee or registrant shall maintain records showing the receipts and transfers of sealed sources and devices using DU for shielding and retain each record for inspection by the department for three years. These records must include the date, the name of the individual making the record, radionuclide, number of becquerels (curies) or mass

(for DU), and manufacturer, model, and serial number of each source of radiation and/or device, as appropriate.

AUTHORITY NOTE: Promulgated in accordance with R.S. 30:2001 et seq.

HISTORICAL NOTE: Promulgated by the Department of Environmental Quality, Nuclear Energy Division, LR 13:569 (October 1987), amended by the Office of Air Quality and Radiation Protection, Radiation Protection Division, LR 20:653 (June 1994), amended by the Office of Environmental Assessment, Environmental Planning Division, LR 26:2582 (November 2000), LR 27:1233 (August 2001), LR 29:1469 (August 2003), LR 30:1667 (August 2004).

§545. Quarterly Inventory

A. Each licensee and registrant shall conduct a quarterly physical inventory to account for all sealed sources and licensed or registered devices received or possessed under his or her license or registration, including devices containing depleted uranium. The records of the inventories shall be maintained for inspection by the department for at least three consecutive years from the date of the inventory and shall include the quantities and kinds of radioactive material, the location of sealed sources and/or devices, the date of the inventory, the name of individual(s) performing the inventory, the manufacturer, the model number, and the serial number.

AUTHORITY NOTE: Promulgated in accordance with R.S. 30:2001 et seq.

HISTORICAL NOTE: Promulgated by the Department of Environmental Quality, Nuclear Energy Division, LR 13:569 (October 1987), amended by the Office of Air Quality and Radiation Protection, Radiation Protection Division, LR 20:653 (June 1994), amended by the Office of Environmental Assessment, Environmental Planning Division, LR 26:2582 (November 2000), LR 27:1233 (August 2001), LR 29:1816 (September 2003).

§546. Utilization Logs

A. Each licensee or registrant shall maintain current logs, which shall be kept available for inspection by the department for three consecutive years from the date of the recorded event, showing for each source of radiation the following information:

1. a unique identification describing the make, model, and serial number of each radiation machine, each radiographic exposure device, each transport or storage container in which the sealed source is located, and each sealed source;

2. the identity and signature of the radiographer to whom the source is assigned;

3. the locations and dates of use; and

4. the date(s) each source of radiation is removed from storage and returned to storage.

AUTHORITY NOTE: Promulgated in accordance with R.S. 30:2001 et seq.

HISTORICAL NOTE: Promulgated by the Department of Environmental Quality, Nuclear Energy Division, LR 13:569 (October 1987), amended by the Office of Air Quality and Radiation Protection, Radiation Protection Division, LR 20:653 (June 1994), amended by the Office of Environmental Assessment, Environmental Planning Division, LR 26:2582 (November 2000), LR 27:1234 (August 2001).

§547. Inspection and Maintenance of Radiographic Exposure Devices and Storage Containers

A. The licensee or registrant shall perform visual and operability checks on radiation machines, radiographic exposure devices, transport and storage containers, source changers, and associated equipment prior to each day's use, or work shift, to ensure that:

1. the equipment is in good condition;

2. the sources are adequately shielded; and

3. required labeling is present.

B. Each licensee or registrant shall have written procedures for and perform inspections at intervals not to exceed three months, or before first use thereafter, and routine maintenance of radiation machines, radiographic exposure devices, source changers, storage containers, and associated equipment to ensure proper functioning of components important to safety. All appropriate parts shall be maintained in accordance with manufacturer's specifications. The licensee's inspection and maintenance program must include procedures to ensure that Type B packages are shipped and maintained in accordance with the certificate of compliance or other approval.

C. Records of inspection and maintenance conducted in accordance with Subsections A and B of this Section shall be maintained for inspection by the department for three consecutive years from the date of the recorded event. The record of inspection must include the date of check or inspection, name of inspector, equipment involved, any problems found, and what repair and/or maintenance, if any, was done. If any inspection conducted in accordance with Subsections A and B of this Section reveals damage to components critical to radiation safety, the device shall be removed from service and labeled as defective until repairs have been made.

D. Each licensee or registrant shall provide a written report to the Office of Environmental Compliance within 30 days of the occurrence of any of the following incidents involving radiographic equipment:

1. unintentional disconnection of the source assembly from the control cable;

2. inability to retract the source assembly to its fully shielded position and secure it in this position; and

3. failure of any component (critical to safe operation of the device) to properly perform its intended function.

E. The licensee or registrant shall include the following information in each report required by Subsection D of this Section and in each report of overexposure submitted under LAC 33:XV.487 that involves failure of safety components of radiography equipment:

1. a description of the equipment problem;

2. cause of each incident, if known;

3. manufacturer and model number of equipment involved in the incident;

4. place, time, and date of the incident;

5. actions taken to establish normal operations;

6. corrective actions taken or planned to prevent recurrence; and

7. qualifications of personnel involved in the incident.

AUTHORITY NOTE: Promulgated in accordance with R.S. 30:2001 et seq.

HISTORICAL NOTE: Promulgated by the Department of Environmental Quality, Nuclear Energy Division, LR 13:569 (October 1987), amended by the Office of Air Quality and Radiation Protection, Radiation Protection Division, LR 20:653 (June 1994), amended by the Office of Environmental Assessment, Environmental Planning Division, LR 26:2582 (November 2000), LR 27:1234 (August 2001).

§548. Permanent Radiographic Installations

A. Permanent radiographic installations having high-radiation area entrance controls of the type described in LAC 33:XV.436.A and B shall also meet the following requirements:

1. each entrance that is used for personnel access to the high radiation area shall have both visible and audible warning signals to warn of the presence of radiation. The visible signal shall be activated by radiation. The audible signal shall be activated when an attempt is made to enter the installation while the source is exposed; and

2. the control device or alarm system as described in LAC 33:XV.436.A and B shall be tested for proper operation at the beginning of each day of equipment use. If a control device or alarm system is operating improperly, it shall be immediately labeled as defective and repaired before industrial radiographic operations are resumed. Records of these tests shall be maintained for inspection by the department for three consecutive years from the date of the event or until disposition is authorized.

AUTHORITY NOTE: Promulgated in accordance with R.S. 30:2001 et seq.

HISTORICAL NOTE: Promulgated by the Department of Environmental Quality, Nuclear Energy Division, LR 13:569 (October 1987), amended by the Office of Air Quality and Radiation Protection, Radiation Protection Division, LR 20:653 (June 1994), amended by the Office of Environmental Assessment, Environmental Planning Division, LR 26:2582 (November 2000), LR 27:1234 (August 2001).

§549. Vehicle Identification

A. The name of the licensee or registrant and the city or town where the licensee's or registrant's main business office is located shall be displayed with durable, clearly visible, and legible label on the sides of all vehicles used at temporary job sites.

AUTHORITY NOTE: Promulgated in accordance with R.S. 30:2001 et seq.

HISTORICAL NOTE: Promulgated by the Department of Environmental Quality, Nuclear Energy Division, LR 13:569 (October 1987), amended by the Office of Air Quality and Radiation Protection, Radiation Protection Division, LR 20:653 (June 1994).

§550. Performance Requirements for Radiography Equipment

A. Equipment serviced, maintained, or repaired by a licensee or registrant or used in industrial operations must meet the following minimum criteria:

1. each radiographic exposure device and all associated equipment shall meet the requirements specified in American National Standard (ANSI) N432-1980 *Radiological Safety for the Design and Construction of Apparatus for Gamma Radiography*, (published as NBS Handbook 136, issued January 1981). Engineering analyses may be submitted by an applicant or licensee to demonstrate the applicability of previously performed testing on similar individual radiography equipment components. Upon review, the department may find this an acceptable alternative to actual testing of the component in accordance with the referenced standard;

2. in addition to the requirements specified in Paragraph A.1 of this Section, the following requirements apply to radiographic exposure devices and associated equipment:

a. each radiographic exposure device must have attached to it, a durable, legible, clearly visible label bearing the following:

i. chemical symbol and mass number of the radionuclide in the device;

ii. activity and the date on which this activity was last measured;

iii. model number and serial number of the sealed source;

iv. manufacturer of the sealed source; and

v. the licensee's name, address, and telephone number;

b. radiographic exposure devices intended for use as Type B transport containers must meet the applicable requirements of LAC 33:XV.Chapter 15; and

c. modification of any exposure devices and associated equipment is prohibited, unless the design of any replacement component, including source holder, source assembly, controls, or guide tubes would not compromise the design safety features of the system;

3. in addition to the requirements specified in Paragraphs A.1 and 2 of this Section, the following requirements apply to radiographic exposure devices and associated equipment that allow the source to be moved out of the device for routine operation:

a. the coupling between the source assembly and the control cable must be designed in such a manner that the source assembly will not become disconnected if extended outside the guide tube. The coupling must be such that it

cannot be unintentionally disconnected under normal and reasonably foreseeable abnormal conditions;

b. the device must automatically secure the source assembly when it is retracted back into the fully shielded position within the device. This securing system may only be released by means of a deliberate operation on the exposure device;

c. the outlet fittings, lock box, and drive cable fittings on each radiographic exposure device must be equipped with safety plugs or covers which must be installed during storage and transportation to protect the source assembly from water, mud, sand, or other foreign matter;

d. each sealed source or source assembly must have attached to it or engraved in it, a durable, legible, visible label with the words: "DANGER-RADIOACTIVE." The label must not interfere with the safe operation of the exposure device or associated equipment;

e. the guide tube must have passed the crushing tests for the control tube as specified in ANSI N432 and a kinking resistance test that closely approximates the kinking forces likely to be encountered during use;

f. guide tubes must be used when moving the source out of the device;

g. an exposure head or similar device designed to prevent the source assembly from passing out of the end of the guide tube must be attached to the outermost end of the guide tube during radiographic operations;

h. the guide tube exposure head connection must be able to withstand the tensile test for control units specified in ANSI N432;

i. source changers must provide a system for assuring that the source will not be accidentally withdrawn from the changer when connecting or disconnecting the drive cable to or from a source assembly;

j. malfunction of any exposure device or associated equipment shall be reported to the Office of Environmental Compliance by telephone at (225) 765-0160 in accordance with the requirements of LAC 33:XV.341; and

k. notwithstanding Paragraphs A.1, 4, and 5 of this Section, equipment used in industrial radiographic operations need not comply with Section 8.9.2(c) of the Endurance Test in American National Standards Institute N432-1980, if the prototype equipment has been tested using a torque value representative of the torque that an individual using the radiography equipment can realistically exert on the lever or crankshaft of the drive mechanism;

4. all newly manufactured radiographic exposure devices and associated equipment acquired by licensees or registrants after the effective date of these regulations must comply with the requirements of LAC 33:XV.550; and

5. all radiographic exposure devices and associated equipment in use after January 10, 1996, must comply with the requirements of LAC 33:XV.550.

AUTHORITY NOTE: Promulgated in accordance with R.S. 30:2001 et seq.

HISTORICAL NOTE: Promulgated by the Department of Environmental Quality, Office of Air Quality and Radiation Protection, Radiation Protection Division, LR 20:653 (June 1994), amended LR 21:554 (June 1995), LR 23:1138 (September 1997), LR 24:2100 (November 1998), amended by the Office of Environmental Assessment, Environmental Planning Division, LR 26:2583 (November 2000).

Subchapter B. Personal Radiation Safety Requirements for Radiographers

§573. Conducting Industrial Radiographic Operations

A. Whenever radiography is performed at a location other than a permanent radiographic installation, the radiographer must be accompanied by at least one other qualified radiographer or, if the radiographer is a qualified instructor, a qualified radiographer trainee, as required by Subsection D of this Section. The additional qualified individual shall observe the operations and be capable of providing immediate assistance to prevent unauthorized entry. Radiography may not be performed if only one qualified individual is present.

B. All radiographic operations conducted at locations of use authorized on the license must be conducted in a permanent radiographic installation, unless specifically authorized by the department.

C. A licensee may conduct lay-barge, offshore platform, or underwater radiography only if procedures have been approved by the department, the Nuclear Regulatory Commission, or another agreement state.

D. At temporary job sites each licensee or registrant shall provide, as a minimum, two-person crews. Such crews shall consist of at least two qualified radiographers or an approved instructor directly supervising a qualified radiographer trainee.

E. A radiation safety officer (RSO) shall be designated for every industrial radiography license and certificate of registration, or license condition specifying such, issued by the department. The RSO's qualifications shall include:

1. possession of a high school diploma or certificate of high school equivalency based on the GED test;

2. completion of the training and testing requirements of LAC 33:XV.575; and

3. two years of documented radiation protection experience, including knowledge of industrial radiographic operations, with at least 40 hours of active participation in industrial radiographic operations.

AUTHORITY NOTE: Promulgated in accordance with R.S. 30:2001 et seq.

HISTORICAL NOTE: Promulgated by the Department of Environmental Quality, Office of Environmental Assessment, Environmental Planning Division, LR 27:1234 (August 2001), amended LR 28:1951 (September 2002), LR 29:34 (January 2003).

§575. Training and Testing

A. No licensee or registrant shall permit any individual to act as a *radiographer*, as defined in this Chapter, until such individual completes the following requirements.

1. The individual shall be instructed by a licensed instructor for at least 40 hours in the subjects outlined in LAC 33:XV.599.Appendix A. The course of instruction must be approved by the department prior to the time of instruction by submitting documentation of instructor licensure and course description.

a. The department must be notified by the licensee at least two weeks prior to presentation of the course.

b. The department must be notified of the cancellation of the course at least 24 hours prior to its scheduled time of presentation.

2. The individual shall complete on-the-job training supervised by one or more radiographer instructors.

a. The instructor shall be authorized on the license or registration certificate.

b. The on-the-job training shall include at least:

i. 200 hours of active participation in radioactive materials industrial radiography operations for an individual to perform industrial radiography utilizing radioactive materials; and/or

ii. 120 hours of active participation in X-ray industrial radiography operations for an individual to perform industrial radiography utilizing X-rays.

c. The hours of on-the-job training do not include safety meetings or classroom training or the use of a cabinet X-ray unit.

d. The current Form DRC-20, available from the department or the department's website, must be submitted to the Office of Environmental Compliance, Emergency and Radiological Services Division, documenting the on-the-job training.

3. The individual shall receive copies of and instruction in the regulations contained in this Chapter and the applicable sections of LAC 33:XV.Chapters 4 and 10, appropriate license, and the licensee's or registrant's operating and emergency procedures.

4. The individual shall demonstrate competence in accordance with Paragraphs A.5 and 6 of this Section to use the sources of radiation, radiographic exposure devices, related handling tools, and radiation survey instruments that may be employed in his assignment.

5. The individual shall successfully complete a company-specific written examination and field test covering the subjects listed in Paragraphs A.3 and 4 of this Section.

6. The individual shall successfully complete, within the last five years, a radiation safety examination administered by the department, another agreement state, the U.S. Nuclear Regulatory Commission, or the American Society of Non-Destructive Testing (ASNT). The examination must be successfully completed at least once every five years.

7. The individual shall have in his or her possession a valid radiographer I.D. card issued by the department, another agreement state, the U.S. Nuclear Regulatory Commission, or the American Society of Non-Destructive Testing (ASNT).

B. No licensee or registrant shall permit any individual to act as a *radiographer trainee*, as defined in this Chapter, until such individual completes the following requirements.

1. The requirements of Paragraph A.1 of this Section shall be met.

2. The individual shall complete on-the-job training supervised by one or more radiographer instructors.

a. The instructor shall be authorized on the license or registration certificate.

b. The on-the-job training, as part of a three-person crew composed of an instructor, a radiographer, and the radiographer trainee applicant, shall include at least:

i. 40 hours of active participation in radioactive materials industrial radiography operations for an individual to perform industrial radiography utilizing radioactive materials; and/or

ii. 40 hours of active participation in X-ray industrial radiography operations for an individual to perform industrial radiography utilizing X-rays.

c. The hours of on-the-job training do not include safety meetings or classroom training or the use of a cabinet X-ray unit.

3. The individual shall receive copies of and instruction in the regulations contained in this Chapter and the applicable sections of LAC 33:XV.Chapters 4 and 10, appropriate license, and the licensee's or registrant's operating and emergency procedures.

4. The individual shall demonstrate competence to use the sources of radiation, radiographic exposure devices, related handling tools, and radiation survey instruments that may be employed in his assignment.

5. The individual shall successfully complete a company-specific written examination and field test covering the subjects listed in Paragraphs B.3 and 4 of this Section.

6. The current Form DRC-20, available from the department or the department's website, must be submitted to the Office of Environmental Compliance, Emergency and Radiological Services Division, documenting the on-the-job training, instruction in the subjects outlined in Appendix A in this Chapter, and successful completion of a company-specific written examination.

7. The individual shall have in his or her possession, a valid radiographer trainee I.D. card issued by the department

or equivalent certification recognized by another agreement state or the U.S. Nuclear Regulatory Commission.

8. Each radiographer trainee I.D. card is valid for a five-year period, unless revoked or suspended in accordance with LAC 33:XV.579.

C. Each licensee or registrant shall maintain, for inspection by the department, until disposition is authorized by the department, the following records for each radiographer and radiographer trainee.

1. Records of Training and Certification. The records must include radiographer certification documents and verification of certification status, copies of written tests, dates and results of oral tests and field examinations, and the names of individuals conducting and receiving the oral and field examinations.

2. Records of Annual Refresher Safety Training and Semiannual Inspections of Job Performance. The records must list the topics discussed during the refresher safety training, the dates the annual refresher safety training was conducted, and the names of the instructors and attendees. For inspections of job performance, the records must also include a list showing the items checked and any noncompliance observed by the radiation safety officer or designee.

D. Each licensee or registrant shall conduct a program of internal audits, not to exceed every six months, to ensure that the Radiation Protection Regulations (LAC 33:XV), Louisiana radioactive material license conditions, and the licensee's or registrant's operating and emergency procedures are followed by each radiographer and radiographer trainee. Records of internal audits shall be maintained for review by the department for two consecutive years from the date of the audit. The internal audit program must include observation of the performance of each radiographer and radiographer trainee during actual industrial radiographic operations at intervals not to exceed six months. In those operations where a single individual serves as both radiographer and RSO, and performs all radiography operations, an internal audit program is not required.

E. The licensee or registrant shall provide annual refresher safety training to all radiographers and radiographer trainees at intervals not to exceed 12 months.

AUTHORITY NOTE: Promulgated in accordance with R.S. 30:2001 et seq.

HISTORICAL NOTE: Promulgated by the Department of Environmental Quality, Nuclear Energy Division, LR 13:569 (October 1987), amended by the Office of Air Quality and Radiation Protection, Radiation Protection Division, LR 20:653 (June 1994), LR 20:999 (September 1994), LR 23:1138 (September 1997), amended by the Office of Environmental Assessment, Environmental Planning Division, LR 26:2583 (November 2000), LR 27:1235 (August 2001), LR 28:1951 (September 2002), LR 29:34 (January 2003), LR 29:1470 (August 2003), amended by the Office of Environmental Assessment, LR 30:2029 (September 2004), LR 31:54 (January 2005), amended by the Office of the Secretary, Legal Affairs Division, LR 31:2531 (October 2005).

§576. Operating and Emergency Procedures

A. The licensee's or registrant's operating and emergency procedures shall include instructions in at least the following:

1. the handling and use of sources of radiation to be employed such that no individual is likely to be exposed to radiation doses in excess of the limits established in LAC 33:XV.Chapter 4;

2. methods and occasions for conducting radiation surveys;

3. methods for controlling access to radiography areas;

4. methods and occasions for locking and securing sources of radiation;

5. personnel monitoring and the use of personnel monitoring equipment, including steps that must be taken immediately by radiography personnel in the event a pocket dosimeter is found to be off scale or an alarm ratemeter sounds unexpectedly;

6. transportation to field locations, including packing of sources of radiation in the vehicles, posting of vehicles and control of sources of radiation during transportation;

7. minimizing exposure of individuals in the event of an accident;

8. the procedure for notifying proper personnel in the event of an accident or unusual occurrence;

9. maintenance of records;

10. the daily inspection, maintenance, and operability checks of radiographic exposure devices, radiation machines, associated equipment, survey meters, and personnel monitoring devices; and

11. source recovery procedure if licensee will perform source recoveries.

B. Each licensee shall maintain a copy of current operating and emergency procedures until the department terminates the license. Superseded material must be retained for three years after the change is made.

AUTHORITY NOTE: Promulgated in accordance with R.S. 30:2001 et seq.

HISTORICAL NOTE: Promulgated by the Department of Environmental Quality, Nuclear Energy Division, LR 13:569 (October 1987), amended by the Office of Air Quality and Radiation Protection, Radiation Protection Division, LR 20:653 (June 1994), amended by the Office of Environmental Assessment, Environmental Planning Division, LR 27:1235 (August 2001).

§577. Personnel Monitoring Control

A. No licensee or registrant shall permit an individual to act as a radiographer, instructor, or radiographer trainee unless, at all times during radiographic operations, each such individual wears, on the trunk of the body, a direct-reading pocket dosimeter, an alarm ratemeter, and a personnel dosimeter that is processed and evaluated by an accredited National Voluntary Laboratory Accreditation Program

(NVLAP) processor, except that for permanent radiography facilities where other appropriate alarming or warning devices are in routine use, the wearing of an alarm ratemeter is not required.

B. Pocket dosimeters shall have a range of zero to at least 2 millisieverts (200 millirems) and shall be recharged at least daily or at the start of each shift. Electronic personal dosimeters may only be used in place of ion-chamber pocket dosimeters. Each personnel dosimeter must be assigned to and worn only by one individual. Pocket dosimeters, or electronic personal dosimeters, shall be checked for correct response to radiation at periods not to exceed one year. Acceptable dosimeters shall read within ±20 percent of the true radiation exposure. Records of positive dosimeter response shall be maintained for three years by the licensee or registrant for department inspection.

C. Each personnel dosimeter shall be processed and evaluated by an accredited NVLAP processor and assigned to and worn by only one individual. Personnel dosimeters must be replaced at periods not to exceed one month. After replacement, each personnel dosimeter must be processed as soon as possible.

D. Direct reading dosimeters, such as electronic personal dosimeters or pocket dosimeters, shall be read and exposures recorded at least daily with use at the beginning and end of each shift, and records must be maintained for three years or until the Office of Environmental Compliance, Emergency and Radiological Services Division, authorizes their disposition.

E. If an individual's pocket dosimeter is discharged beyond its range (i.e., goes "off-scale"), or an individual's electronic pocket dosimeter reads greater than 2 millisieverts (200 millirems) and the possibility of radiation exposure cannot be ruled out as the cause, industrial radiographic operations by that individual shall cease and the individual's personnel dosimeter shall be sent for processing immediately. The individual shall not return to work with sources of radiation until a determination of the radiation exposure has been made. This determination must be made by the RSO or the RSO's designee. The results of this determination must be recorded and maintained indefinitely or until the Office of Environmental Compliance, Emergency and Radiological Services Division, authorizes their disposition.

F. Records of the pocket dosimeter readings shall be maintained for inspection by the department for three consecutive years. If the dosimeter readings were used to determine external radiation dose, the records shall be maintained indefinitely or until the Office of Environmental Compliance, Emergency and Radiological Services Division, authorizes their disposition.

G. If a personnel dosimeter is lost or damaged, the worker shall cease work immediately until a replacement personnel dosimeter is provided and the exposure is calculated for the time period from issuance to loss or damage of the personnel dosimeter. The results of the calculated exposure and the time period for which the personnel dosimeter was lost or damaged must be recorded and maintained indefinitely or until the Office of Environmental Compliance, Emergency and Radiological Services Division, authorizes their disposition.

H. Each alarm ratemeter must:

1. be checked and recorded to ensure that the alarm functions properly (sounds) prior to use at the start of each shift;

2. be set to give an alarm signal at the preset dose rate of 5 mSv/hr (500 millirems/hour);

3. require special means to change the preset alarm function; and

4. be calibrated at periods not to exceed one year for correct response to radiation: acceptable ratemeters must alarm within ±20 percent of the true radiation dose rate. Records of calibrations shall be maintained for three years.

AUTHORITY NOTE: Promulgated in accordance with R.S. 30:2001 et seq.

HISTORICAL NOTE: Promulgated by the Department of Environmental Quality, Nuclear Energy Division, LR 13:569 (October 1987), amended by the Office of Air Quality and Radiation Protection, Radiation Protection Division, LR 20:653 (June 1994), amended by the Office of Environmental Assessment, Environmental Planning Division, LR 26:2583 (November 2000), LR 27:1235 (August 2001), LR 28:1951 (September 2002), LR 29:35 (January 2003), LR 29:1470 (August 2003), amended by the Office of the Secretary, Legal Affairs Division, LR 31:2531 (October 2005).

§578. Reciprocity

A. Reciprocal recognition by the department of an individual radiographer certification will be granted provided that:

1. the individual holds a valid certification in the appropriate category and class issued by another state or jurisdiction;

2. the requirements and procedures for certification in the state of jurisdiction issuing the certification afford the same or comparable certification standards as those afforded by LAC 33:XV.575;

3. the applicant presents the certification to the Office of Environmental Compliance, Emergency and Radiological Services Division, prior to entry into Louisiana; and

4. no escalated enforcement action is pending with the Nuclear Regulatory Commission or in any other state.

B. Certified individuals who are granted reciprocity by the department shall maintain the certification upon which the reciprocal recognition was granted or prior to the expiration of such certification, shall meet the requirements of LAC 33:XV.575.

AUTHORITY NOTE: Promulgated in accordance with R.S. 30:2001 et seq.

HISTORICAL NOTE: Promulgated by the Department of Environmental Quality, Office of Air Quality and Radiation Protection, Radiation Protection Division, LR 20:1000 (September 1994), amended by the Office of Environmental Assessment,

Environmental Planning Division, LR 26:2583 (November 2000), LR 29:35 (January 2003), amended by the Office of the Secretary, Legal Affairs Division, LR 31:2531 (October 2005).

§579. Identification (I.D.) Cards for Radiographers or Radiographer Trainees

A. Issuance

1. An I.D. card shall be issued to each person who successfully completes the requirements of LAC 33:XV.575.A or B.

2. A radiographer I.D. card shall contain the radiographer's photograph. The department will take the photograph at the time the examination is administered. The radiographer trainee I.D. card does not require a photograph.

3. An I.D. card remains the property of the state of Louisiana and may be revoked or suspended under the provisions of this Section.

4. Any individual who wishes to replace his/her I.D. card shall submit to the Office of Environmental Compliance, Emergency and Radiological Services Division, a written request for a replacement I.D. card, stating the reason a replacement I.D. card is needed. A non-refundable fee of $26 shall be paid to the department for each replacement of an I.D. card. The prescribed fee shall be submitted with the written request for a replacement I.D. card. The individual shall maintain a copy of the request in his/her possession while performing industrial radiographic operations until a replacement I.D. card is received from the department.

B. Expiration of I.D. Card. Each I.D. card is valid for a period of five years, unless revoked or suspended in accordance with LAC 33:XV.579. Each I.D. card expires at the end of the day indicated on the I.D. card.

C. Renewal of a Radiographer I.D. Card

1. Applications for examination to renew an I.D. card shall be filed in accordance with LAC 33:XV.575.A.

2. The examination for renewal of an I.D. card shall be administered in accordance with LAC 33:XV.575.

3. A renewal I.D. card shall be issued in accordance with this Section.

D. Renewal of a Radiographer Trainee I.D. Card

1. Applications for a renewal radiographer trainee I.D. card shall be filed in accordance with LAC 33:XV.575.B.

2. A renewal I.D. card shall be issued in accordance with this Section.

E. Revocation or Suspension of an I.D. Card

1. Any radiographer or radiographer trainee who violates these Rules may be required to show cause at a formal hearing why his or her I.D. card should not be revoked or suspended in accordance with these regulations.

2. When a department order has been issued for an industrial radiographer or radiographer trainee to cease and desist from the use of sources of radiation or the department revokes or suspends his or her I.D. card, the industrial radiographer or radiographer trainee shall surrender the I.D. card to the department until the order is changed or the suspension expires.

AUTHORITY NOTE: Promulgated in accordance with R.S. 30:2001 et seq.

HISTORICAL NOTE: Promulgated by the Department of Environmental Quality, Office of Air Quality and Radiation Protection, Radiation Protection Division, LR 20:1000 (September 1994), amended by the Office of Environmental Assessment, Environmental Planning Division, LR 26:2584 (November 2000), LR 29:36 (January 2003), LR 29:691 (May 2003), LR 29:2053 (October 2003), amended by the Office of the Secretary, Legal Affairs Division, LR 31:2531 (October 2005).

Subchapter C. Precautionary Procedures in Radiographic Operations

§585. Security

A. During each radiographic operation, a radiographer or instructor shall maintain continuous direct, visual surveillance of the operation to protect against unauthorized entry into a *radiation area* or *high radiation area*, as defined in LAC 33:XV.Chapter 1, except:

1. where the high radiation area is equipped with a control device or alarm system as described in LAC 33:XV.436.A; or

2. where the high radiation area is locked to protect against unauthorized or accidental entry.

AUTHORITY NOTE: Promulgated in accordance with R.S. 30:2001 et seq.

HISTORICAL NOTE: Promulgated by the Department of Environmental Quality, Nuclear Energy Division, LR 13:569 (October 1987), amended by the Office of Air Quality and Radiation Protection, Radiation Protection Division, LR 20:653 (June 1994), amended by the Office of Environmental Assessment, Environmental Planning Division, LR 27:1236 (August 2001).

§586. Posting

A. Notwithstanding any provisions in LAC 33:XV.452, areas in which radiography is being performed shall be conspicuously posted as required by LAC 33:XV.451.A and B.

AUTHORITY NOTE: Promulgated in accordance with R.S. 30:2001 et seq.

HISTORICAL NOTE: Promulgated by the Department of Environmental Quality, Nuclear Energy Division, LR 13:569 (October 1987), amended by the Office of Air Quality and Radiation Protection, Radiation Protection Division, LR 20:653 (June 1994).

§587. Radiation Surveys and Survey Records

A. No radiographic operation shall be conducted unless calibrated and operable radiation survey instrumentation, as described in LAC 33:XV.543, is available and used at each site where radiographic exposures are made.

B. A physical radiation survey shall be made after each radiographic exposure utilizing radiation machines or sealed sources to determine that the machine is "off" or that the

sealed source has been returned to its shielded position immediately upon completion of exposure. The entire circumference or perimeter of the radiographic exposure device shall be surveyed. If the radiographic exposure device has a source guide tube, the survey shall also include the entire length of the guide tube.

C. A physical radiation survey shall be made to determine that each sealed source is in its shielded position any time the source is exchanged and prior to securing the radiographic exposure device or storage container as specified in LAC 33:XV.541.

D. A survey shall be made of the *storage area* as defined in LAC 33:XV.503 whenever a radiographic exposure device is being placed in storage.

E. Records shall be kept of the surveys required by Subsections C and D of this Section. Such records shall be maintained for inspection by the department for three consecutive years after completion of the survey. If the survey has been used to determine an individual's exposure, the records of the survey shall be maintained until the department authorizes their disposition.

AUTHORITY NOTE: Promulgated in accordance with R.S. 30:2001 et seq.

HISTORICAL NOTE: Promulgated by the Department of Environmental Quality, Nuclear Energy Division, LR 13:569 (October 1987), amended by the Office of Air Quality and Radiation Protection, Radiation Protection Division, LR 20:653 (June 1994), amended by the Office of Environmental Assessment, Environmental Planning Division, LR 26:2584 (November 2000), LR 27:1236 (August 2001), LR 28:1952 (September 2002).

§588. Documents and Records Required at Temporary Job Sites and Applicable Field Stations

A. Each licensee or registrant conducting industrial radiography at a temporary job site or applicable field station shall have the following documents and records available at that job site or field station for inspection by the department:

1. current copy of appropriate license, registration certificate, or other authorizing documents;

2. operating and emergency procedures;

3. applicable regulations;

4. survey records required pursuant to LAC 33:XV.472 and 587.D for the period of operation at the site;

5. dosimeter records, from daily pocket dosimeters and/or electronic personal dosimeters, for the period of operation at the site as required by LAC 33:XV.577;

6. the latest instrument calibration and leak test records for specific devices and sealed sources in use at the site as required by LAC 33:XV.543 and 544. Acceptable records include tags or labels that are affixed to the device or survey meter;

7. a copy of the card issued by the department granting radiographer trainee status to any radiographer trainee performing industrial radiography at the temporary job site;

8. records of daily checks of equipment as required in LAC 33:XV.547;

9. evidence of the latest calibration of alarming ratemeters and operability checks of dosimeters as required by LAC 33:XV.577;

10. the shipping papers for the transportation of radioactive materials as required by LAC 33:XV.1502; and

11. when operating under reciprocity in accordance with LAC 33:XV.390, a copy of the applicable state license or registration or Nuclear Regulatory Commission license authorizing the use of sources of radiation.

AUTHORITY NOTE: Promulgated in accordance with R.S. 30:2001 et seq.

HISTORICAL NOTE: Promulgated by the Department of Environmental Quality, Nuclear Energy Division, LR 13:569 (October 1987), amended by the Office of Air Quality and Radiation Protection, Radiation Protection Division, LR 20:653 (June 1994), amended by the Office of Environmental Assessment, Environmental Planning Division, LR 26:2772 (December 2000), LR 27:1236 (August 2001), LR 28:1952 (September 2002), amended by the Office of Environmental Assessment, LR 31:54 (January 2005).

§589. Special Requirements and Exemptions for Enclosed Radiography

A. Systems for enclosed radiography designed to allow admittance of individuals shall:

1. comply with all applicable requirements of this Chapter and LAC 33:XV.421, and if such system is a certified cabinet X-ray system, it shall comply with all applicable requirements of this Chapter and 21 CFR 1020.40; and

2. be evaluated at intervals not to exceed one year to assure compliance with the applicable requirements as specified in LAC 33:XV.589.A.1. Records of these evaluations shall be maintained for inspection by the department for a period of two consecutive years after the evaluation.

B. Enclosed X-ray systems designed to exclude individuals are exempt from the requirements of this Chapter except as follows:

1. operating personnel must be provided with either a film badge or a thermoluminescent dosimeter, and reports of the results must be maintained for inspection by the department;

2. no registrant shall permit any individual to operate an enclosed X-ray system until such individual has received a copy of and instructions in the operating procedures for the unit and has demonstrated competence in its use. Records that demonstrate compliance with this Section shall be maintained for inspection by the department until disposition is authorized by the department;

3. tests for proper operation of high radiation area control devices or alarm systems, where applicable, must be conducted and recorded in accordance with LAC 33:XV.548; and

4. the registrant shall perform an evaluation, at intervals not to exceed one year, to determine conformance with LAC 33:XV.421. If such system is a certified X-ray system, it shall be evaluated at intervals not to exceed one year to determine conformance with 21 CFR 1020.40. Records of these evaluations shall be maintained for inspection by the department for a period of two consecutive years after the evaluation.

C. Certified cabinet X-ray systems shall be maintained in compliance with 21 CFR 1020.40 unless prior approval has been granted by the administrative authority pursuant to LAC 33:XV.103.A.

D. No registrant may modify a cabinet X-ray system without prior approval of the administrative authority pursuant to LAC 33:XV.103.A.

AUTHORITY NOTE: Promulgated in accordance with R.S. 30:2001 et seq.

HISTORICAL NOTE: Promulgated by the Department of Environmental Quality, Nuclear Energy Division, LR 13:569 (October 1987), amended by the Office of Air Quality and Radiation Protection, Radiation Protection Division, LR 20:653 (June 1994), amended by the Office of Environmental Assessment, Environmental Planning Division, LR 26:2584 (November 2000).

§590. Specific Requirements for Radiographic Personnel Performing Industrial Radiography

A. At a job site, the following shall be supplied by the licensee or registrant:

1. at least one operable, calibrated survey instrument;

2. a current whole body personnel monitor (TLD or film badge) for each individual;

3. an operable, calibrated pocket dosimeter with a range of 0 to 200 milliroentgens (5.16×10^{-5} C/kg) for each worker;

4. an operable alarm ratemeter which meets the requirements of LAC 33:XV.577.H for each individual; and

5. the appropriate barrier ropes and signs.

B. Industrial radiographic operations shall not be performed if any of the items in LAC 33:XV.590.A are not available at the job site or are inoperable.

C. Collimators shall be used in industrial radiographic operations that use crank-out devices and/or X-ray devices, except when physically impossible.

D. No individual other than a radiographer or a radiographer trainee who is under the personal supervision of a radiographer instructor shall manipulate controls or operate equipment used in industrial radiographic operations. The radiographer trainee shall also be under the personal supervision of a radiographer instructor when using radiographic exposure devices, associated equipment, or a sealed source or while conducting radiation surveys required by LAC 33:XV.587 to determine that the sealed source has returned to its shielded position or the radiation machine is off after an exposure. The personal supervision must include:

1. the radiographer instructor's physical presence at the site where the sources of radiation are being used;

2. the availability of the radiographer instructor to give immediate assistance if required; and

3. the radiographer instructor's direct observation of the trainee's performance of the operations referred to in this Section.

E. No individual shall act as a radiographer instructor unless such individual:

1. has met the requirements of LAC 33:XV.575.A;

2. has one year of documented experience as a radiographer; and

3. has been named as a radiographer instructor on the license or registration certificate issued by the department.

F. During an inspection by the department, the department inspector may terminate an operation if any of the items of LAC 33:XV.590.A are not available and operable or if at least two radiographers are not present. Operations shall not be resumed until such conditions are met.

AUTHORITY NOTE: Promulgated in accordance with R.S. 30:2001 et seq.

HISTORICAL NOTE: Promulgated by the Department of Environmental Quality, Office of Air Quality and Radiation Protection, Radiation Protection Division, LR 20:653 (June 1994), amended LR 23:1139 (September 1997), amended by the Office of Environmental Assessment, Environmental Planning Division, LR 26:2584 (November 2000), LR 27:1237 (August 2001), LR 28:1952 (September 2002), LR 29:36 (January 2003), LR 29:1816 (September 2003).

§591. Prohibitions

A. Industrial radiography performed with a sealed source which is not fastened to or contained in a radiographic exposure device, known as fishpole radiography, is prohibited unless specifically authorized in a license issued by the department.

B. Exposure of a personnel monitoring device to deceptively indicate a dose delivered to an individual is prohibited.

AUTHORITY NOTE: Promulgated in accordance with R.S. 30:2001 et seq.

HISTORICAL NOTE: Promulgated by the Department of Environmental Quality, Office of Air Quality and Radiation Protection, Radiation Protection Division, LR 20:653 (June 1994), amended by the Office of Environmental Assessment, Environmental Planning Division, LR 26:2585 (November 2000).

§599. Appendices A and B

Appendix A
Subjects to be Covered during the Instruction of Radiographer Trainees

Training provided to qualify individuals as radiographers in compliance with LAC 33:XV.575.A shall be presented on a formal basis.

I. Fundamentals of Radiation Safety

A. Characteristics of radiation

B. Units of radiation dose and quantity of radioactivity

C. Significance of radiation dose

1. Radiation protection standards

2. Biological effects of radiation dose

3. Case histories of radiography accidents

D. Levels of radiation from sources of radiation

E. Methods of controlling radiation dose

1. Working time

2. Working distances

3. Shielding

II. Radiation Detection Instrumentation to be Used

A. Use of radiation survey instruments

1. Operation and daily inspection

2. Calibration

3. Limitations

B. Survey techniques

C. Use of personnel monitoring equipment

1. Film badges

2. Thermoluminescent dosimeters (TLD)

3. Pocket dosimeters

4. Alarm ratemeters

III. Requirements of Pertinent Federal and State Regulations

IV. Licensee's or Registrant's Written Operating and Emergency Procedures

V. Radiographic Equipment Use

A. Associated equipment

B. Radiographic exposure devices and sealed sources

C. Storage containers

D. Operation and control of X-ray equipment

E. Collimators

Appendix B
Radiographer Certification

A. Requirements For Certification Programs. All certification programs must:

1. require applicants for certification to:

a. receive training in the topics set forth in LAC 33:XV.599.Appendix A or equivalent Nuclear Regulatory Commission regulations; and

b. satisfactorily complete a written examination covering these topics;

2. require applicants for certification to provide documentation that demonstrates that the applicant has:

a. received training in the topics set forth in LAC 33:XV.599.Appendix A or equivalent Nuclear Regulatory Commission regulations;

b. satisfactorily completed a minimum period of on-the-job training as specified in LAC 33:XV.575; and

c. received verification by a state licensee or registrant or a Nuclear Regulatory Commission licensee that the applicant has demonstrated the capability of independently working as a radiographer;

3. include procedures to ensure that all examination questions are protected from disclosure;

4. include procedures for denying an application and revoking, suspending, and reinstating a certification;

5. provide a certification period of not less than three years nor more than five years;

6. include procedures for renewing certifications and, if the procedures allow renewal without examination, require evidence of full-time employment and annual refresher training; and

7. provide a timely response to inquiries, by telephone or letter, from members of the public about an individual's certification status.

B. Requirements For Written Examinations. All examinations must:

1. be designed to test an individual's knowledge and understanding of the topics listed in LAC 33:XV.599.Appendix A or equivalent Nuclear Regulatory Commission requirements;

2. be written in a multiple-choice format; and

3. have test items drawn from a question bank containing psychometrically valid questions based on the material in LAC 33:XV.599.Appendix A.

AUTHORITY NOTE: Promulgated in accordance with R.S. 30:2001 et seq.

HISTORICAL NOTE: Promulgated by the Department of Environmental Quality, Nuclear Energy Division, LR 13:569 (October 1987), amended by the Office of Air Quality and Radiation Protection, Radiation Protection Division, LR 20:653 (June 1994), amended by the Office of Environmental Assessment, Environmental Planning Division, LR 27:1237 (August 2001).

Chapter 6. X-Rays in the Healing Arts

§601. Scope

A. This Chapter establishes requirements, for which a licensee or registrant is responsible, for use of X-ray equipment by or under the supervision of an individual authorized by and licensed in accordance with state statutes to engage in the healing arts or veterinary medicine. The provisions of this Chapter are in addition to, and not in substitution for, other applicable provisions of LAC 33:XV.

AUTHORITY NOTE: Promulgated in accordance with R.S. 30:2001 et seq.

HISTORICAL NOTE: Promulgated by the Department of Environmental Quality, Nuclear Energy Division, LR 13:569 (October 1987), amended by the Office of Air Quality and Radiation Protection, Radiation Protection Division, LR 19:1421 (November 1993).

§602. Definitions

As used in this Chapter, the following definitions apply. Other definitions applicable to this Chapter may be found in LAC 33:XV.Chapters 1 and 2.

Accessible Surface—the external surface of the enclosure or housing provided by the manufacturer.

Added Filtration—any filtration that is in addition to the inherent filtration.

Aluminum Equivalent—the thickness of type 1100 aluminum alloy affording the same attenuation, under specified conditions, as the material in question. The

nominal chemical composition of type 1100 aluminum alloy is 99.00 percent minimum aluminum, 0.12 percent copper.

Assembler—any person engaged in the business of assembling, replacing, or installing one or more components into an X-ray system or subsystem. The term includes the owner of an X-ray system or his or her employee or agent who assembles components into an X-ray system that is subsequently used to provide professional or commercial services.

Attenuation Block—a block or stack, having dimensions 20 centimeters by 20 centimeters by 3.8 centimeters, of type 1100 aluminum alloy or other materials having equivalent attenuation.

Automatic Exposure Control—a device that automatically controls one or more technique factors in order to obtain at a preselected location or locations a required quantity of radiation (see also *Phototimer*).

Barrier—see *Protective Barrier*.

Beam Axis—a line from the source through the centers of the X-ray fields.

Beam-Limiting Device—a device that provides a means to restrict the dimensions of the X-ray field.

Beam Monitoring System—a system designed to detect and measure the radiation present in the useful beam.

C Arm X-Ray System—an X-ray system in which the image receptor and X-ray tube housing assembly are connected by a common mechanical support system in order to maintain a desired spatial relationship. This system is designed to allow a change in the projection of the beam through the patient without a change in the position of the patient.

Cephalometric Device—a device intended for the radiographic visualization and measurement of the dimensions of the human head.

Certified Components—components of X-ray systems that are subject to the Regulations for the Administration and Enforcement of the Radiation Control for Health and Safety Act of 1968, promulgated under Public Law 90-602.

Certified System—any X-ray system that has one or more certified component(s).

Changeable Filters—any filter, exclusive of inherent filtration, that can be removed from the useful beam through any electronic, mechanical, or physical process.

Coefficient of Variation or "C"—the ratio of the standard deviation to the mean value of a population of observations.

Computed Tomography (*CT*)—the production of a tomogram by the acquisition and computer processing of X-ray transmission data.

Contact Therapy System—an X-ray system used for therapy with the X-ray tube port placed in contact with or within 5 centimeters of the surface being treated.

Control Panel—that part of the X-ray control upon which are mounted the switches, knobs, pushbuttons, and other hardware necessary for manually setting the technique factors.

Cooling Curve—the graphical relationship between heat units stored and cooling time.

Dead-Man Switch—a switch so constructed that a circuit closing contact can be maintained only by continuous pressure on the switch by the operator.

Detector—see *Radiation Detector*.

Diagnostic Source Assembly—the tube housing assembly with a beam-limiting device attached.

Diagnostic-Type Tube Housing—a tube housing so constructed that the leakage radiation measured at a distance of 1 meter from the source does not exceed 100 mR in one hour when the tube is operated at its leakage technique factors.

Diagnostic X-Ray Imaging System—an assemblage of components for the generation, emission, and reception of X-rays and the transformation, storage, and visual display of the resultant X-ray image.

Diagnostic X-Ray System—an X-ray system designed for irradiation of any part of the human or animal body for the purpose of diagnosis or visualization.

Direct Scattered Radiation—radiation emanating from materials irradiated by the primary beam.

Entrance Exposure Rate—the exposure free in air per unit time at the point where the center of the useful beam enters the patient.

Equipment—see *X-Ray Equipment*.

Exposure—the quotient of dQ by dm where "dQ" is the absolute value of the total charge of the ions of one sign produced in air when all the electrons (negatrons and positrons) liberated by photons in a volume element of air having mass "dm" are completely stopped in air. (The special unit of exposure is the roentgen.)

Field Emission Equipment—equipment that uses an X-ray tube in which electron emission from the cathode is due solely to the action of an electric field.

Filter—material placed in the useful beam to absorb preferentially selected radiations.

Fluoroscopic Imaging Assembly—a subsystem in which X-ray photons produce a fluoroscopic image. It includes the image receptor(s) such as the image intensifier and spot-film device, electrical interlocks, if any, and structural material providing linkage between the image receptor and diagnostic source assembly.

Focal Spot (actual)—the area on the anode of the X-ray tube bombarded by the electrons accelerated from the cathode and from which the useful beam originates.

General Purpose Radiographic X-Ray System—any radiographic X-ray system that, by design, is not limited to radiographic examination of specific anatomical regions.

Gonad Shield—a protective barrier for the testes or ovaries of not less than 0.5 mm lead equivalency.

Half-Value Layer—the thickness of specified material that attenuates the beam of radiation to an extent such that the exposure rate is reduced to 2 of its original value. In this definition, the contribution of all scattered radiation, other than any that might be present initially in the beam concerned, is deemed to be excluded.

Healing Arts Screening—the testing of human beings using X-ray machines for the detection or evaluation of health indications when such tests are not specifically and individually ordered by a licensed practitioner of the healing arts legally authorized to prescribe such X-ray tests for the purpose of diagnosis or treatment.

HVL—see *Half-Value Layer*.

Image Intensifier—a device, installed in its housing, that instantaneously converts an X-ray pattern into a corresponding light image of higher energy density.

Image Receptor—any device, such as a fluorescent screen or radiographic film/screen combination, that transforms incident X-ray photons either into a visible image or into another form that can be made into a visible image by further transformations.

Image Receptor Support—for mammographic systems, that part of the system designed to support the image receptor during mammography.

Inherent Filtration—the filtration of the useful beam provided by the permanently installed components of the tube housing assembly.

Irradiation—the exposure of matter to ionizing radiation.

Kilovolts Peak—see *Peak Tube Potential*.

KV—kilovolts.

Kws—kilowatt second.

Lead Equivalent—the thickness of lead affording the same attenuation, under specified conditions, as the material in question.

Leakage Radiation—radiation emanating from the diagnostic or therapeutic source assembly except for:

1. the useful beam; and

2. radiation produced when the exposure switch or timer is not activated.

Leakage Technique Factors—the technique factors associated with the diagnostic or therapeutic source assembly that are used in measuring leakage radiation. They are defined as follows:

1. for diagnostic source assemblies intended for capacitor energy storage equipment, the maximum rated peak tube potential and the maximum rated number of exposures in an hour for operation at the maximum rated peak tube potential with the quantity of charge per exposure being 10 millicoulombs, i.e., 10 milliampere seconds, or the minimum obtainable from the unit, whichever is larger;

2. for diagnostic source assemblies intended for field emission equipment rated for pulsed operation, the maximum rated peak tube potential and the maximum rated number of X-ray pulses in an hour for operation at the maximum rated peak tube potential; and

3. for all other diagnostic or therapeutic source assemblies, the maximum rated peak tube potential and the maximum rated continuous tube current for the maximum rated peak tube potential.

Light Field—that area of the intersection of the light beam from the beam-limiting device and one of the sets of planes parallel to and including the plane of the image receptor, whose perimeter is the locus of points at which the illumination is 1/4 of the maximum in the intersection.

Line-Voltage Regulation—the difference between the no-load and the load line potentials expressed as a percentage of the load line potential. It is calculated using the following equation.

$$Percent\ line\text{-}voltage\ regulation = 100\frac{(V_n - V_1)}{V_1}$$

where:

V_n = no-load line potential; and
V_1 = load line potential.

MA—milliampere.

MAs—milliampere second.

Mammography Physicist—an individual who has submitted credentials to the department and who satisfies one or more of the following criteria:

1. is certified in radiological physics by the American Board of Radiology or the American Board of Medical Physics and who continues to meet the Mammography Quality Standards Act (MQSA) requirement of 15 hours of continuing mammography education every three years;

2. has a master's or doctoral degree from an accredited college or university in physics, engineering, chemistry, or environmental science, has at least one year of radiation survey experience that includes performing instrument surveys on at least 20 mammography units, and continues to meet the MQSA requirement of 15 hours of continuing mammography education every three years;

3. has a bachelor's degree from an accredited college or university in physics, engineering, chemistry, environmental science, or any biological science that included at least 10 semester hours of college-level physics, has had at least five years of experience with making

radiation measurements that includes performing instrument surveys on at least 20 mammography units, and continues to meet the MQSA requirement of 15 hours of continuing mammography education every three years; and

4. has been approved by the department.

Maximum Line Current—the root-mean-square current in the supply line of an X-ray machine operating at its maximum rating.

Mobile X-Ray Equipment—see *X-Ray Equipment.*

Operator—an individual who, under the supervision of a practitioner of the healing arts, physically positions patients or animals, determines exposure parameters, and applies the radiation for the diagnostic or therapeutic purposes intended. See the definition of supervision in LAC 33:XV.110.E.

Patient—an individual or animal subjected to healing arts examination, diagnosis, or treatment.

Peak Tube Potential (kVp)—the maximum value of the potential difference across the X-ray tube during an exposure.

Phantom—a volume of material behaving in a manner similar to tissue with respect to the attenuation and scattering of radiation. This requires that both the atomic number (Z) and the density of the material be similar to that of tissue.

Phototimer—a method for controlling radiation exposures to image receptors by measuring the amount of radiation that reaches a radiation monitoring device or devices. The radiation monitoring device or devices are part of an electronic circuit that controls the duration of time the tube is activated (see *Automatic Exposure Control*).

Portable X-Ray Equipment—(See *X-Ray Equipment.*)

Position Indicating Device (PID)—a device on dental X-ray equipment used to indicate the beam position and to establish a definite source-surface (skin) distance. It may or may not incorporate or serve as a beam-limiting device.

Positive Beam Limitation (PBL)—the automatic or semiautomatic adjustment of an X-ray beam to the selected image receptor size, whereby exposures cannot be made without such adjustment.

Primary Beam—see *Useful Beam*.

Primary Dose Monitoring System—a system that will monitor the useful beam during irradiation and that will terminate irradiation when a preselected number of dose monitor units have been acquired.

Protected Area—an area shielded with primary or secondary protective barriers or an area removed from the radiation source such that the exposure rate within the area due to normal operating procedures and workload does not exceed any of the following limits:

1. 2 milliroentgens in any one hour;

2. 100 milliroentgens in any seven consecutive days; or

3. 500 milliroentgens in any one year.

Protective Apron—an apron made of radiation absorbing materials used to reduce radiation exposure.

Protective Barrier (*Primary Protective Barrier*)—a barrier of radiation absorbing material(s) used to reduce radiation exposure. The types of protective barriers are as follows:

1. *Primary Protective Barrier*—the material, excluding filters, placed in the useful beam, to protect anyone other than the patient from radiation exposure.

2. *Secondary Protective Barrier*—a barrier sufficient to absorb the stray radiation to the required degree.

Protective Glove—a glove made of radiation absorbing materials used to reduce radiation exposure.

Qualified Expert—an individual who has demonstrated to the satisfaction of the department that such individual possesses the knowledge, training, and experience to measure ionizing radiation, to evaluate safety techniques, and to advise regarding radiation protection needs.

Quality Control—the routine measurement of image quality and the performance of the diagnostic X-ray imaging system, from X-ray beam output to the viewing of radiographs, and the continual adjustment of that performance to an optimal and consistent level.

Radiation Detector—a device that in the presence of radiation provides a signal or other indication suitable for use in measuring one or more quantities of incident radiation.

Radiation Therapy Simulation System—a radiographic or fluoroscopic X-ray system intended for localizing the volume to be exposed during radiation therapy and confirming the position and size of the therapeutic irradiation field.

Radiograph—an image receptor on which the image is created directly or indirectly by an X-ray pattern and results in a permanent record.

Radiographic Imaging System—any system whereby a permanent or temporary image is recorded on an image receptor by the action of ionizing radiation.

Rating—the operating limits as specified by the component manufacturer.

Recording—producing a permanent form of an image resulting from X-ray photons.

Registrant—as used in this Chapter, any person who owns or possesses and administratively controls an X-ray system that is used to deliberately expose humans or animals to the useful beam of the system and is required by the provisions contained in LAC 33:XV.Chapters 1 and/or 2 to register with the administrative authority.

Scattered Radiation—radiation that, during passage through matter, has deviated in direction (See *Direct Scattered Radiation.*)

Secondary Dose Monitoring System—a system that will terminate irradiation in the event of failure of the primary system.

Secondary Protective Barrier—see *Protective Barrier.*

Shutter—a device attached to the tube housing assembly that can intercept the entire cross sectional area of the useful beam and that has a lead equivalency not less than that of the tube housing assembly.

Source—the focal spot of the X-ray tube.

Source-Image Receptor Distance (SID)—the distance from the source to the center of the input surface of the image receptor.

Spot Check—a procedure performed to assure that a previous calibration continues to be valid.

Spot Film—a radiograph made during a fluoroscopic examination to permanently record conditions that exist during that fluoroscopic procedure.

Spot Film Device—a device intended to transport and/or position a radiographic image receptor between the X-ray source and fluoroscopic image receptor. The term includes a device intended to hold a cassette over the input end of an image intensifier for the purpose of making a radiograph.

SSD—the distance between the source and the skin entrance plane of the patient.

Stationary X-Ray Equipment—see *X-Ray Equipment*.

Stray Radiation—the sum of leakage and scattered radiation.

Technique Factors—the following conditions of operation:

1. for capacitor energy storage equipment, peak tube potential in kV and quantity of charge in mAs;

2. for field emission equipment rated for pulsed operation, peak tube potential in kV, and number of X-ray pulses;

3. for CT X-ray systems designed for pulsed operation, peak tube potential in kV, scan time in seconds, and either tube current in mA, X-ray pulse width in seconds, and the number of X-ray pulses per scan, or the product of tube current, X-ray pulse width, and the number of X-ray pulses in mAs;

4. for CT X-ray systems not designed for pulsed operation, peak tube potential in kV, and either tube current in mA and scan time in seconds, or the product of tube current and exposure time in mAs and the scan time when the scan time and exposure time are equivalent; and

5. for all other equipment, peak tube potential in kV, and either tube current in mA and exposure time in seconds, or the product of tube current and exposure time in mAs.

Termination of Irradiation—the stopping of irradiation in a fashion that will not permit continuance of irradiation without the resetting of operating conditions at the control panel.

Therapeutic-Type Protective Tube Housing—the tube housing with tube installed. It includes high voltage and/or filament transformers and other appropriate elements when they are contained within the tube housing.

Tomogram—the depiction of the X-ray attenuation properties of a section through the body.

Traceable to a National Standard—refers to a quantity or a measurement that has been compared to a national standard directly or indirectly through one or more intermediate steps, and all comparisons have been documented.

Tube—an X-ray tube, unless otherwise specified.

Tube Housing Assembly—the tube housing with tube installed. It includes high-voltage and/or filament transformers and other appropriate elements when such are contained within the tube housing.

Tube Rating Chart—the set of curves that specify the rated limits of operation of the tube in terms of the technique factors.

Unprotected Area—any area in which the exposure rate, due to the use of the radiation machine under normal operating procedures and workloads, exceeds any of the following limits:

1. 2 milliroentgens in any one hour;

2. 100 milliroentgens in any seven consecutive days; or

3. 500 milliroentgens in any one year.

Useful Beam—the radiation emanating from the tube housing port or the radiation head and passing through the aperture of the beam-limiting device when the exposure controls are in a mode to cause the system to produce radiation.

Variable-Aperture Beam-Limiting Device—a beam-limiting device that has the capacity for stepless adjustment of the X-ray field size at a given SID.

Visible Area—that portion of the input surface of the image receptor over which incident X-ray photons are producing a visible image.

Wedge Filter—an added filter effecting continuous progressive attenuation on all or part of the useful beam.

X-Ray Control—a device that controls input power to the X-ray high-voltage generator and/or the X-ray tube. It includes equipment such as timers, phototimers, automatic brightness stabilizers, and similar devices, which control the technique factors of an X-ray exposure.

X-Ray Equipment—an X-ray system, subsystem, or component thereof. Types of X-ray equipment are as follows:

1. *Mobile X-Ray Equipment*—X-ray equipment mounted on a permanent base with wheels and/or casters for moving while completely assembled.

2. *Portable X-Ray Equipment*—X-ray equipment designed to be hand-carried.

3. *Stationary X-Ray Equipment*—X-ray equipment that is installed in a fixed location.

4. *Transportable X-Ray Equipment*—X-ray equipment installed in a vehicle or trailer.

X-Ray Field—that area of the intersection of the useful beam and any one of the set of planes parallel to and including the plane of the image receptor, whose perimeter is the locus of points at which the exposure rate is one-fourth of the maximum in the intersection.

X-Ray High-Voltage Generator—a device that transforms electrical energy from the potential supplied by the X-ray control to the tube operating potential. The device may also include means for transforming alternating current to direct current, filament transformers for the X-ray tube(s), high-voltage switches, electrical protective devices, and other appropriate elements.

X-Ray Subsystem—any combination of two or more components of an X-ray system.

X-Ray System—an assemblage of components for the controlled production of X-rays. It includes minimally an X-ray high-voltage generator, an X-ray control, a tube housing assembly, a beam-limiting device, and the necessary supporting structures. Additional components that function with the system are considered integral parts of the system.

X-Ray Tube—any electron tube designed to be used primarily for the production of X-rays.

AUTHORITY NOTE: Promulgated in accordance with R.S. 30:2001 et seq.

HISTORICAL NOTE: Promulgated by the Department of Environmental Quality, Nuclear Energy Division, LR 13:569 (October 1987), amended by the Office of Air Quality and Radiation Protection, Radiation Protection Division, LR 19:1421 (November 1993), LR 23:1139 (September 1997), amended by the Office of Environmental Assessment, Environmental Planning Division, LR 26:2585 (November 2000).

§603. General and Administrative Requirements

A. Radiation Safety Requirements. The registrant or licensee shall be responsible for directing the operation of the X-ray system(s) under his or her administrative control. The registrant or licensee or his or her agent shall assure that the requirements of LAC 33:XV are met in the operation of the X-ray system(s).

1. An X-ray system that does not meet the provisions of LAC 33:XV shall not be operated for diagnostic or therapeutic purposes if so directed by the department.

2. Individuals who will be operating the X-ray systems shall be adequately instructed in the safe operating procedures and be competent in the safe use of the equipment.

3. A chart shall be provided in the vicinity of the diagnostic X-ray system's control panel that specifies, for all examinations performed with that system, the following information:

a. patient's body part and anatomical size or body part thickness or age (for pediatrics) versus technique factors to be utilized;

b. type and size of the film or film-screen combination to be used;

c. type and focal distance of the grid to be used, if any;

d. source image receptor distance (SID) to be used (except for dental intraoral radiographs); and

e. type and location of placement of patient shielding (e.g., gonad, etc.) to be used.

4. At the request of the department, the registrant or licensee of a facility shall create and make available written safety procedures to each individual operating X-ray equipment, including any restrictions of the operating technique required for the safe operation of the particular X-ray system. The operator shall be able to demonstrate familiarity with these procedures.

5. Except for human patients who cannot be moved out of the room, only the staff and ancillary personnel, including parents or guardians, required for the medical procedure or training shall be in the room during the radiographic exposure. The following conditions shall be met for those other than the patient being examined:

a. all individuals shall be positioned such that no part of the body will be struck by the useful beam unless protected by not less than 0.5 millimeter lead equivalent;

b. the X-ray operator, other professional staff, and ancillary personnel shall be protected from the direct scatter radiation by protective aprons or whole body protective barriers of not less than 0.25 millimeter lead equivalent material; and

c. human patients who cannot be removed from the room shall be protected from the direct scatter radiation by whole body protective barriers of not less than 0.25 millimeter lead equivalent material or shall be so positioned that the nearest portion of the body is at least 2 meters from both the tube head and the nearest edge of the image receptor.

6. Gonad shielding of not less than 0.5 millimeter lead equivalent material shall be used for human patients who have not passed the reproductive age during radiographic procedures in which the gonads are in the useful beam, except for cases in which this would interfere with the diagnostic procedure.

7. Individuals shall not be exposed to the useful beam except for healing arts purposes and unless such exposure has been authorized by a licensed practitioner of the healing arts. Any diagnostic information obtained from each exposure shall be reviewed by a licensed practitioner of the healing arts. This provision specifically prohibits deliberate exposure for the following purposes:

a. exposure of an individual for training, demonstration, or other non-healing arts purposes; and

b. exposure of an individual for the purpose of healing arts screening without prior written approval of the department.

8. When a patient or film must be provided with auxiliary support during a radiation exposure:

a. mechanical holding devices shall be used when the technique permits. Written safety procedures are required and shall list individual projections where holding devices cannot be utilized;

b. written safety procedures, as required by LAC 33:XV.603.A.8.a, shall indicate the requirements for selecting a holder and the procedure the holder shall follow;

c. the human holder shall be instructed in personal radiation safety and protected as required by LAC 33:XV.603.A.5;

d. no individual shall be used routinely to hold film or patients;

e. in those cases where the patient must hold the film, except during intraoral examinations, any portion of the body other than the area of clinical interest struck by the useful beam shall be protected by not less than 0.5 millimeter lead equivalent material;

f. when an animal must be held by an individual during an exposure, that individual shall be protected with appropriate shielding devices, such as leaded aprons and gloves, and shall be positioned such that no part of his or her body shall be struck by the useful beam; and

g. each facility must have leaded aprons and gloves available in sufficient numbers to provide protection to all personnel who are involved in X-ray operations and who are otherwise not shielded.

9. Procedures and auxiliary equipment designed to minimize patient and personnel exposure commensurate with the needed diagnostic information shall be utilized, including, but not limited to:

a. the speed of film or screen and film combinations shall be the fastest speed consistent with the diagnostic objective of the examinations. Film cassettes without intensifying screens shall not be used for any routine diagnostic radiological imaging, with the exception of standard packets for intraoral use in dental radiography;

b. the radiation exposure to the patient shall be the minimum exposure required to produce images of acceptable diagnostic quality;

c. portable or mobile X-ray equipment shall be used only for examinations where it is impractical to transfer the patient(s) to a stationary X-ray installation;

d. X-ray systems subject to LAC 33:XV.606 shall not be utilized in procedures where the source to patient distance is less than 30 centimeters, except for veterinary systems;

e. each registrant or licensee, except for veterinarians, covered under this Chapter shall establish written standards for the proper performance of each diagnostic X-ray imaging system under the control of the registrant or licensee, and shall document by routine test record that the system is performing in accordance with these standards (quality control). Copies of this documentation shall be retained for at least six months and be available for inspection by the department. If a test interval is greater than six months, then a copy of the most recent test record shall be retained;

f. if grids are used between the patient and the image receptor to decrease scatter to the film and improve contrast, the grid shall:

i. be positioned properly, i.e., tube side facing the right direction and grid centered to the central ray; and

ii. if of the focused type, be of the proper focal distance for the SID's being used.

10. All individuals who are associated with the operation of an X-ray system are subject to the requirements of LAC 33:XV.410 and 411. In addition, when protective clothing or devices are worn on portions of the body and a personnel monitoring device or devices are required in accordance with LAC 33:XV.431, monitoring devices shall be used as follows:

a. when an apron is worn, at least one such monitoring device shall be worn at the collar outside of the apron;

b. the dose to the whole body based on the maximum dose attributed to the most critical organ shall be recorded in the reports required by LAC 33:XV.476. If more than one device is used and a record is made of the data, each dose shall be identified with the area where the device was worn on the body; and

c. deliberate exposure to an individual's personnel monitoring device is prohibited.

11. Any person proposing to conduct a healing arts screening program shall not initiate such a program without prior approval of the department. When requesting such approval, that person shall submit the information outlined in LAC 33:XV.699.Appendix C to the Office of Environmental Compliance, Emergency and Radiological Services Division. If any information submitted to the department becomes invalid or outdated, the Office of Environmental Compliance, Emergency and Radiological Services Division, shall be immediately notified. See the definition of *healing arts screening* as defined in LAC 33:XV.602.

12. Any person proposing to conduct a diagnostic or screening mammography program shall not initiate such a program without having a complete mammography facility survey performed by a mammography physicist initially and at least annually thereafter.

B. X-Ray Film Processing Facilities and Practices. Each installation using a radiographic X-ray system and using

analog image receptors (radiographic film) shall have available suitable equipment for handling and processing radiographic film in accordance with the following provisions:

1. manually developed film:

a. processing tanks for manually developed film shall be constructed of mechanically rigid, corrosion resistant material;

b. the temperature of solutions in the tanks for manually developed film shall be maintained within the range of 60° to 80°F (16° to 27°C). Film shall be developed in accordance with the time-temperature relationships recommended by the film manufacturer or, in the absence of such recommendations, with the following time-temperature chart:

Time-Temperature Chart		
Thermometer Reading (Degrees)		Minimum Developing Time (Minutes)
°C	°F	
26.7	80	2
26.1	79	2
25.6	78	2½
25.0	77	2½
24.4	76	3
23.9	75	3
23.3	74	3½
22.8	73	3½
22.2	72	4
21.7	71	4
21.1	70	4½
20.6	69	4½
20.0	68	5
19.4	67	5½
18.9	66	5½
18.3	65	6
17.8	64	6½
17.2	63	7
16.7	62	8
16.1	61	8½
15.6	60	9½

c. devices shall be utilized for manually developed film that will:

i. indicate the actual temperature of the developer; and

ii. signal the passage of a preset time appropriate to the developing time required;

2. automatic processors and other closed processing systems:

a. films shall be developed by automatic processors and other closed processing systems in accordance with the time-temperature relationships recommended by the film manufacturer; in the absence of such recommendations, the film shall be developed using the following chart:

Developer Temperature		Minimum Immersion Time*
°C	°F	Seconds
35.5	96	19
35	95	20
34.5	94	21
34	93	22
33.5	92	23
33	91	24
32	90	25
31.5	89	26
31	88	27
30.5	87	28
30	86	29
29.5	85	30
*Immersion time only, no crossover time included.		

b. the specified developer temperature and immersion time shall be posted in the darkroom or on the automatic processor in a manner that provides sufficient and legible notice to persons present in these areas;

3. other requirements:

a. pass boxes, if provided, shall be so constructed as to exclude light from the darkroom when cassettes are placed in or removed from the boxes, and shall incorporate adequate shielding from stray radiation to prevent exposure of undeveloped film;

b. the darkroom shall be light tight and use proper safelighting such that any film type in use exposed in a cassette to X-radiation sufficient to produce an optical density from one to two when processed shall not suffer an increase in density greater than 0.1 (0.05 for mammography) when exposed in the darkroom for two minutes with all safelights on. If used, daylight film handling boxes shall preclude fogging of the film;

c. darkrooms typically used by more than one individual shall be provided a positive method to prevent accidental entry while undeveloped films are being handled or processed;

d. film shall be stored in a cool, dry place and shall be protected from exposure to stray radiation. Film in open packages shall be stored in a light tight container;

e. film cassettes and intensifying screens shall be inspected periodically and shall be cleaned and replaced as necessary to best assure radiographs of acceptable diagnostic quality;

f. outdated X-ray film shall not be used for human diagnostic radiographs, unless the film has been stored in accordance with the manufacturer's recommendations and a sample of the film passes a sensitometric test for normal ranges of base plus fog and speed; and

g. film developing solutions shall be prepared in accordance with the directions given by the manufacturer of the chemicals, and shall be maintained in strength by replenishment or renewal so that full development of film is accomplished within the time specified by the manufacturer.

C. Plans Review

1. Except for dedicated mammography radiographic systems, podiatric radiographic systems, panoramic dental radiographic systems, and intraoral dental radiographic systems, prior to construction, the floor plans and equipment arrangement of all new installations, or modifications of existing installations, utilizing X-rays for diagnostic or therapeutic purposes shall be submitted to the Office of Environmental Compliance, Emergency and Radiological Services Division, for review and approval. The required information is specified in LAC 33:XV.699.Appendices A and B.

2. The floor plans and equipment arrangement for all new, or modifications of existing, installations for veterinary X-ray systems shall be reviewed for adequacy by the department on a case-by-case basis.

3. The department may require the applicant to utilize the services of a qualified expert to determine the shielding requirements prior to the plans review and approval.

4. The approval of such plans shall not preclude the requirement of additional modifications should a subsequent analysis of operating conditions indicate the possibility of an individual receiving a dose in excess of the limits prescribed in LAC 33:XV.410, 416, and 421.

AUTHORITY NOTE: Promulgated in accordance with R.S. 30:2001 et seq.

HISTORICAL NOTE: Promulgated by the Department of Environmental Quality, Nuclear Energy Division, LR 13:569 (October 1987), amended by the Office of Air Quality and Radiation Protection, Radiation Protection Division, LR 19:1421 (November 1993), LR 22:976 (October 1996), LR 23:1139 (September 1997), amended by the Office of Environmental Assessment, Environmental Planning Division, LR 26:2585 (November 2000), amended by the Office of the Secretary, Legal Affairs Division, LR 31:2532 (October 2005).

§604. General Requirements for All Diagnostic X-Ray Systems

A. In addition to other requirements of this Chapter, all diagnostic X-ray systems shall meet the following requirements.

1. Warning Label. The control panel containing the main power switch shall bear the warning statement, legible and accessible to view: "WARNING: This X-ray unit may be dangerous to patient and operator unless safe exposure factors and operating instructions are observed."

2. Battery Charge Indicator. On battery-powered X-ray generators, visual means shall be provided on the control panel to indicate whether the battery is in a state of charge adequate for proper operation.

3. Leakage Radiation from the Diagnostic Source Assembly. The leakage radiation from the diagnostic source assembly measured at a distance of 1 meter in any direction from the source shall not exceed 100 milliroentgens (25.8 μC/kg) in one hour when the X-ray tube is operated at its leakage technique factors. Compliance shall be determined by measurements averaged over an area of 100 square centimeters with no linear dimension greater than 20 centimeters. If leakage technique factors cannot be set on the control panel, then compliance shall be determined by measuring leakage at maximum kVp and an appropriate mAs.

4. Radiation from Components Other Than the Diagnostic Source Assembly. The radiation emitted by a component other than the diagnostic source assembly shall not exceed 2 milliroentgens (0.516 μC/kg) in one hour at 5 centimeters from any accessible surface of the component when it is operated in an assembled X-ray system under any conditions for which it was designed. Compliance shall be determined by measurements averaged over an area of 100 square centimeters with no linear dimension greater than 20 centimeters.

5. Beam Quality

a. Half-Value Layer

i. The half-value layer of the useful beam for a given X-ray tube potential shall not be less than the values shown in Table 1 of this Chapter. If it is necessary to determine such half-value layer at an X-ray tube potential that is not listed in Table 1, linear interpolation or extrapolation may be made.

Table 1

Design Operating Range System	Measured Potential (kVp)	Dental Intraoral Manufactured before 8/1/74 and on or before 12/1/80	All Other Diagnostic X-ray Half-Value Layer (mm of Aluminum)
Below 51	30	N/A	0.3
	40	N/A	0.4
	50	1.5	0.5
51 to 70	51	1.5	1.2
	60	1.5	1.3
	70	1.5	1.5
Above 70	71	2.1	2.1
	80	2.3	2.3
	90	2.5	2.5
	100	2.7	2.7
	110	3.0	3.0
	120	3.2	3.2
	130	3.5	3.5
	140	3.8	3.8
	150	4.1	4.1

ii. For capacitor energy storage equipment, compliance with the requirements of LAC 33:XV.604.A.5 shall be determined with the maximum quantity of charge per exposure. This will be deemed to have been met if a mAs of 5-10 has been used.

iii. The required minimal half-value layer of the useful beam shall include the filtration contributed by all materials that are permanently between the source and the patient, e.g., a tabletop when the tube is mounted "under the table" and inherent filtration of the tube.

b. Filtration Controls. For X-ray systems that have variable kVp and variable filtration for the useful beam, a device shall link the kVp selector with the filter(s) and shall

prevent an exposure unless the minimum amount of filtration required by LAC 33:XV.604.A.5.a is in the useful beam for the given kVp that has been selected.

6. Multiple Tubes. Where two or more radiographic tubes are controlled by one exposure switch, the tube or tubes that have been selected shall be clearly indicated prior to initiation of the exposure. This indication shall be both on the X-ray control panel and at or near the tube housing assembly that has been selected.

7. Mechanical Support of Tube Head. The tube housing assembly supports shall be adjusted such that the tube housing assembly will remain stable during an exposure unless tube housing movement is a designed function of the X-ray system.

8. Technique Indicators

a. The technique factors to be used during an exposure shall be indicated before the exposure begins. If automatic exposure controls are used, the technique factors set prior to the exposure shall be indicated.

b. The requirement of LAC 33:XV.604.A.8.a may be met by permanent markings on equipment having fixed technique factors. Indication of technique factors shall be visible from the operator's position except in the case of spot films made by the fluoroscopist.

9. Maintaining Compliance. Diagnostic X-ray systems and their associated components used on humans and certified pursuant to the federal X-ray equipment performance standard shall be maintained in compliance with applicable requirements of that standard.

AUTHORITY NOTE: Promulgated in accordance with R.S. 30:2001 et seq.

HISTORICAL NOTE: Promulgated by the Department of Environmental Quality, Nuclear Energy Division, LR 13:569 (October 1987), amended by the Office of Air Quality and Radiation Protection, Radiation Protection Division, LR 19:1421 (November 1993).

§605. Fluoroscopic X-Ray Systems

A. All fluoroscopic X-ray systems shall be image intensified and meet the following requirements.

1. Limitation of Useful Beam

a. Primary Barrier

i. The fluoroscopic imaging assembly shall be provided with a primary protective barrier that intercepts the entire cross section of the useful beam at any SID.

ii. The X-ray tube used for fluoroscopy shall not produce X-rays unless the primary protective barrier is in position to intercept the entire useful beam at all times.

b. X-Ray Field

i. Neither the length nor the width of the X-ray field in the plane of the image receptor shall exceed that of the visible area of the image receptor by more than 3 percent of the SID. The sum of the excess length and the excess width shall be no greater than 4 percent of the SID. In addition, the following requirements apply:

(a). a means shall be provided to permit further limitation of the field. Beam-limiting devices manufactured after May 22, 1979, and incorporated in equipment with a variable SID and/or a visible area of greater than 300 square centimeters shall be provided with means for stepless adjustment of the X-ray field;

(b). all equipment with a fixed SID and a visible area of 300 square centimeters or less shall be provided with either stepless adjustment of the X-ray field or with means to further limit the X-ray field size at the plane of the image receptor to 125 square centimeters or less. Stepless adjustment shall provide continuous field sizes from the maximum obtainable to a field size of 5 centimeters by 5 centimeters or less;

(c). for equipment manufactured after February 25, 1978, when the angle between the image receptor and beam axis is variable, means shall be provided to indicate when the axis of the X-ray beam is perpendicular to the plane of the image receptor;

(d). compliance shall be determined with the beam axis indicated to be perpendicular to the plane of the image receptor. For rectangular X-ray fields used with circular image reception, the error in alignment shall be determined along the length and width dimensions of the X-ray field that pass through the center of the visible area of the image receptor; and

(e). for uncertified image intensified fluoroscopic equipment with a spot film device, the X-ray beam with the shutters fully opened (during fluoroscopy or spot filming) shall be no larger than the largest spot film size for which the device is designed. Measurements shall be made at the minimum SID available but at no less than 20 centimeters from the tabletop to the film plane distance.

ii. Spot-film devices that are certified components shall meet the following additional requirements:

(a). means shall be provided between the source and the patient for adjustment of the X-ray field size in the plane of the film to the size of that portion of the film that has been selected on the spot film selector. Such adjustment shall be automatically accomplished except when the X-ray field size in the plane of the film is smaller than that of the selected portion of the film;

(b). it shall be possible to adjust the X-ray field size in the plane of the film to a size smaller than the selected portion of the film. The minimum field size at the greatest SID shall be equal to, or less than, 5 centimeters by 5 centimeters;

(c). the center of the X-ray field in the plane of the film shall be aligned with the center of the selected portion of the film to within 2 percent of the SID; and

(d). on spot-film devices manufactured after February 25, 1978, if the angle between the plane of the image receptor and beam axis is variable, means shall be

provided to indicate when the axis of the X-ray beam is perpendicular to the plane of the image receptor, and compliance shall be determined with the beam axis indicated to be perpendicular to the plane of the image receptor.

2. Activation of the Fluoroscopic Tube. X-ray production in the fluoroscopic mode shall be controlled by a device that requires continuous pressure by the fluoroscopist for the entire time of any exposure. When recording serial fluoroscopic images, the fluoroscopist shall be able to terminate the X-ray exposure(s) at any time, but means may be provided to permit completion of any single exposure of the series in process.

3. Exposure Rate Limits

a. Entrance Exposure Rate Allowable Limits

i. Equipment with Automatic Exposure Rate Control. Fluoroscopic equipment provided with automatic exposure rate control shall not be operable at any combination of tube potential and current that will result in an exposure rate in excess of 10 roentgens (2.58 mC/kg) per minute at the point where the center of the useful beam enters the patient, except:

(a). during recording of fluoroscopic images;

(b). when an optional high level control is provided. When so provided, the equipment shall not be operable at any combination of tube potential and current that will result in an exposure rate in excess of 5 roentgens (1.29 mC/kg) per minute at the point where the center of the useful beam enters the patient, unless high level control is activated. Special means of activation of high level controls shall be required. The high level control shall be operable only when continuous manual activation is provided by the operator. A continuous signal audible to the fluoroscopist shall indicate that the high level control is being employed; or

(c). when optional high level control is provided on equipment manufactured after May 19, 1995. When so provided, the equipment shall not be operable at any combination of tube and current that will result in an exposure rate in excess of 10 roentgens (2.58 mC/kg) per minute at the point where the center of the useful beam enters the patient, unless the high level control is activated. Special means of activation of high level control shall be required. The high level control shall only be operable when continuous manual activation is provided by the operator and the equipment shall not be operable at any combination of tube and current that will result in an exposure rate in excess of 20 roentgens (5.16 mC/kg) per minute at the point where the useful beam enters the patient. A continuous signal audible to the fluoroscopist shall indicate that the high level control is being employed.

ii. Equipment without Automatic Exposure Rate Control. Fluoroscopic equipment that is not provided with automatic exposure rate control shall not be operable at any combination of tube potential and current that will result in an exposure rate in excess of 5 roentgens (1.29 mC/kg) per minute at the point where the center of the useful beam enters the patient, except:

(a). during recording of fluoroscopic images; or

(b). when an optional high level control is activated. Special means of activation of high level controls shall be required. The high level control shall be operable only when continuous manual activation is provided by the operator. A continuous signal audible to the fluoroscopist shall indicate that the high level control is being employed.

iii. Compliance with the requirements of LAC 33:XV.605.A.3 shall be determined as follows:

(a). if the source is below the X-ray table, the exposure rate shall be measured 1 centimeter above the tabletop or cradle;

(b). if the source is above the X-ray table, the exposure rate shall be measured at 30 centimeters above the tabletop with the end of the beam-limiting device or spacer positioned as closely as possible to the point of measurement;

(c). in a C-arm or L-U arm type of fluoroscope, the exposure rate shall be measured 30 centimeters from the input surface of the fluoroscopic imaging assembly, with the source positioned at any available SID, provided that the end of the beam-limiting device or spacer is no closer than 30 centimeters from the input surface of the fluoroscopic imaging assembly;

(d). in a lateral type fluoroscope, the exposure rate shall be measured at a point 15 centimeters from the centerline of the X-ray table and in the direction of the X-ray source with the end of the beam-limiting device or spacer positioned as closely as possible to the point of measurement. If the tabletop is movable, it shall be positioned as closely as possible to the lateral X-ray source, with the end of the beam-limiting device or spacer no closer than 15 centimeters to the center line of the X-ray table; and

(e). protective attenuating material equivalent to 3 millimeters of lead shall be placed between the point of measurement of entrance exposure rate and the input surface of the image receptor.

b. Periodic measurement of entrance exposure rates shall be performed by a qualified expert for both maximum and typical values, as follows:

i. such measurements shall be made at installation, annually thereafter or after any maintenance of the system that might affect the exposure rate;

ii. results of these measurements shall be posted where any fluoroscopist may have ready access to such results while using the fluoroscope. The measurement results shall be stated in roentgens per minute and include the technique factors used in determining such results. The name of the individual performing the measurements and the date the measurements were performed shall be included in the results;

iii. conditions of periodic measurement of maximum entrance exposure rate are as follows:

(a). the measurement shall be made under the conditions that satisfy the requirements of LAC 33:XV.605.A.3.a.iii;

(b). the kVp, mA, and/or other selectable parameters shall be adjusted to those settings that give the maximum entrance exposure rate; and

(c). the X-ray system that incorporates automatic exposure rate control shall have sufficient attenuative material placed in the useful beam to produce the maximum output of that system; and

iv. conditions of periodic measurement of typical entrance rate are as follows:

(a). the measurement shall be made under the conditions that satisfy the requirements of LAC 33:XV.605.A.3.a.iii;

(b). the kVp and mA shall be typical of clinical use of the X-ray system; and

(c). the X-ray system or systems that incorporate automatic exposure rate control shall have an appropriate phantom placed in the useful beam to produce a mA and/or kV typical of the use of the X-ray system.

4. Barrier Transmitted Radiation Rate Limits

a. The exposure rate due to transmission through the primary protective barrier with the attenuation block in the useful beam, combined with radiation from the image intensifier, shall not exceed 2 milliroentgens (0.516 μC/kg) per hour at 10 centimeters from any accessible surface of the fluoroscopic imaging assembly beyond the plane of the image receptor for each roentgen per minute of entrance exposure rate.

b. Measuring Compliance of Barrier Transmission

i. The exposure rate due to transmission through the primary protective barrier combined with radiation from the image intensifier shall be determined by measurements averaged over an area of 100 square centimeters with no linear dimension greater than 20 centimeters.

ii. If the source is below the tabletop, the measurement shall be made with the input surface of the fluoroscopic imaging assembly positioned 30 centimeters above the tabletop.

iii. If the source is above the tabletop and the SID is variable, the measurement shall be made with the end of the beam-limiting device or spacer as close to the tabletop as it can be placed, provided that it shall not be closer than 30 centimeters.

iv. Movable grids and compression devices shall be removed from the useful beam during the measurement.

5. Indication of Potential and Current. During fluoroscopy and cinefluorography the kV and the mA shall be continuously indicated.

6. Source-to-Skin Distance. The SSD shall not be less than:

a. 38 centimeters on stationary fluoroscopic systems manufactured on or after August 1, 1974;

b. 35.5 centimeters on stationary fluoroscopic systems manufactured prior to August 1, 1974;

c. 30 centimeters on all mobile fluoroscopes; and

d. 20 centimeters for all mobile fluoroscopes used for specific surgical procedures. The written safety procedures or user's operating manual must provide precautionary measures to be taken during the use of this type of fluoroscope. If removable, the appropriate spacer shall be replaced after the specific surgical procedure is complete.

7. Fluoroscopic Timer

a. A means shall be provided to preset the cumulative on-time of the fluoroscopic X-ray tube. The maximum cumulative time of the timing device shall not exceed five minutes without resetting.

b. A signal audible to the fluoroscopist, or the appropriate operator, shall indicate the completion of any preset cumulative on-timer, or if no audible signal is provided, the exposure shall terminate until the cumulative timer is manually reset at the console. Such signal shall either continue to sound while X-rays are produced or shall sound for at least five seconds, whichever is less, until the timing device is reset.

8. Control of Scattered Radiation

a. Fluoroscopic table designs when combined with procedures utilized shall be such that no unprotected part of any staff or ancillary individual's body shall be exposed to unattenuated scattered radiation that originates from under the table. The attenuation required shall be not less than 0.25 millimeter lead equivalent.

b. Equipment configuration when combined with procedures utilized shall be such that no portion of any staff or ancillary individual's body, except the extremities, shall be exposed to the unattenuated scattered radiation emanating from above the tabletop unless that individual:

i. is at least 120 centimeters from the center of the useful beam; or

ii. the radiation has passed through not less than 0.25 millimeter lead equivalent material including, but not limited to, drapes, bucky-slot cover panel, or self-supporting curtains, in addition to any lead equivalency provided by the protective apron referred to in LAC 33:XV.603.A.5.

c. Upon application to the administrative authority with adequate justification, exemptions to LAC 33:XV.605.A.8.b may be made in some special procedures where a sterile field will not permit the use of the normal protective barriers. Where the use of prefitted sterilized covers for the barriers is practical, the department shall not permit such exemption.

9. Spot Film Exposure Reproducibility. Fluoroscopic systems equipped with spot film (radiographic) mode shall meet the exposure reproducibility requirements of LAC 33:XV.606.D when operating in the spot film mode.

10. Radiation Therapy Simulation Systems. Radiation therapy simulation systems shall be exempt from all the requirements of LAC 33:XV.605.A.1, 3, 4, and 7, provided that:

a. such systems are designed and used in such a manner that no individual other than the patient is in the X-ray room during periods when the system is producing X-rays; and

b. systems that do not meet the requirements of LAC 33:XV.605.A.7 are provided with a means of indicating the cumulative time that an individual patient has been exposed to X-rays. Procedures shall require in such cases that the timer be reset between examinations.

AUTHORITY NOTE: Promulgated in accordance with R.S. 30:2001 et seq.

HISTORICAL NOTE: Promulgated by the Department of Environmental Quality, Nuclear Energy Division, LR 13:569 (October 1987), amended by the Office of Air Quality and Radiation Protection, Radiation Protection Division, LR 19:1421 (November 1993), amended by the Office of Environmental Assessment, Environmental Planning Division, LR 26:2270 (October 2000), LR 26:2586 (November 2000), LR 28:1952 (September 2002).

§606. Radiographic Systems Other Than Fluoroscopic, Dental Intraoral, or Computed Tomography X-Ray Systems

A. Beam Limitation. The useful beam shall be limited to the area of clinical interest. This requirement shall be deemed to have been met if a positive beam-limiting device has been properly used or if evidence of collimation is shown on at least three sides or three corners of the film (for example, projections from the shutters of the collimator, cone cutting at the corners, or borders at the film's edge).

1. General Purpose Stationary and Mobile X-Ray Systems, Including Veterinary Systems Installed after February 21, 1991. These systems shall meet the following requirements:

a. a means shall be provided for independent stepless adjustment of at least two dimensions of the X-ray field;

b. a method shall be provided for visually defining the perimeter of the X-ray field. The total misalignment of the edges of the visually defined field with the respective edges of the X-ray field along either the length or width of the visually defined field shall not exceed 2 percent of the distance from the source to the center of the visually defined field when the surface upon which it appears is perpendicular to the axis of the X-ray beam; and

c. the department may grant an exemption on noncertified X-ray systems to LAC 33:XV.606.A.1.a and b provided the registrant or licensee makes a written application for such exemption and in that application:

i. demonstrates that it is impractical to comply with LAC 33:XV.606.A.1.a and b; and

ii. the purposes of LAC 33:XV.606.A.1.a and b will be met by other methods.

2. Additional Requirements for Stationary General Purpose X-Ray Systems. In addition to the requirements of LAC 33:XV.606.A.1, stationary general purpose X-ray systems, both certified and noncertified, shall meet the following requirements:

a. a method shall be provided to indicate when the axis of the X-ray beam is perpendicular to the plane of the image receptor, to align the center of the X-ray field with respect to the center of the image receptor to within 2 percent of the SID, and to indicate the SID to within 2 percent;

b. the beam-limiting device shall indicate numerically the field size in the plane of the image receptor to which it is adjusted; and

c. indication of the field size dimensions and SID's shall be specified in inches and/or centimeters, and shall be such that aperture adjustments result in X-ray field dimensions in the plane of the image receptor that correspond to those indicated by the beam-limiting device to within 2 percent of the SID when the beam axis is indicated to be perpendicular to the plane of the image receptor.

3. X-Ray Systems Designed for One Image Receptor Size. Radiographic equipment designed for only one image receptor size at a fixed SID shall be provided with means to limit the field at the plane of the image receptor to dimensions no greater than those of the image receptor, and to align the center of the X-ray field with the center of the image receptor to within 2 percent of the SID, or shall be provided with means to both size and align the X-ray field such that the X-ray field at the plane of the image receptor does not extend beyond any edge of the image receptor.

4. Systems Designed for or Provided with Special Attachments for Mammography. Radiographic systems designed only for mammography, and general purpose radiographic systems when special attachments for mammography are in service, shall be provided with means to limit the useful beam such that the X-ray field at the plane of the image receptor does not extend beyond any edge of the image receptor at any designated SID, except the edge of the image receptor designed to be adjacent to the chest wall where the X-ray field may not extend beyond this edge by more than 2 percent of the SID. This requirement can be met with a system that performs as prescribed in LAC 33:XV.606.A.5.c. When the beam-limiting device and image receptor support device are designed to be used to immobilize the breast during a mammographic procedure and the SID may vary, the SID indication specified in LAC 33:XV.606.A.5.c.i and ii shall be the maximum SID for which the beam-limiting device or aperture is designed. In addition, each image receptor support intended for installation on a system designed only for mammography

shall have clear and permanent markings to indicate the maximum image receptor size for which it is designed.

5. X-Ray Systems Other Than Those Described in LAC 33:XV.606.A.1, 2, 3, and 4, and Veterinary Systems Prior to February 21, 1991. These systems shall meet the following requirements:

a. a means shall be provided to limit the X-ray field in the plane of the image receptor so that such field does not exceed each dimension of the image receptor by more than 2 percent of the SID when the axis of the X-ray beam is perpendicular to the plane of the image receptor;

b. a means shall be provided to align the center of the X-ray field with the center of the image receptor to within 2 percent of the SID, or means shall be provided to both size and align the X-ray field such that the X-ray field at the plane of the image receptor does not extend beyond any edge of the image receptor. Compliance shall be determined with the axis of the X-ray beam perpendicular to the plane of the image receptor; and

c. LAC 33:XV.606.A.5.a and b may be met with a system that meets the requirements for a general purpose X-ray system as specified in LAC 33:XV.606.A.1 or, when alignment means are also provided, may be met with either:

i. an assortment of removable, fixed-aperture, beam-limiting devices sufficient to meet the requirement for each combination of image receptor size and SID for which the unit is designed with each such device having clear and permanent markings to indicate the image receptor size and SID for which it is designed; or

ii. a beam-limiting device having multiple fixed apertures sufficient to meet the requirement for each combination of image receptor size and SID for which the unit is designed. Permanent, clearly legible markings shall indicate the image receptor size and SID for which each aperture is designed and shall indicate which aperture is in position for use.

B. Radiation Exposure Control Devices

1. Exposure Initiation. A means shall be provided to initiate the radiation exposure by a positive action on the part of the operator, such as the depression of a switch. Radiation exposure shall not be initiated without such a positive action. In addition, it shall not be possible to initiate an exposure when the timer is set to a "zero" or "off" position if either position is provided.

2. Exposure Termination

a. Manual Exposure Control. An X-ray exposure control shall be incorporated into each X-ray system such that an exposure can be terminated by the operator at any time ("deadman" switch) except for:

i. exposures of ½ second or less; or

ii. during serial radiography when means shall be provided to permit completion of any single exposure of the series in process.

b. Automatic Exposure Control. When an automatic exposure control is provided:

i. indication shall be made on the control panel when this mode of operation is selected;

ii. if the X-ray tube potential is equal to or greater than 50 kVp, the minimum exposure time for field emission equipment rated for pulsed operation shall be equal to or less than a time interval equivalent to two pulses;

iii. the minimum exposure time for all equipment other than that specified in LAC 33:XV.606.B.2.b.ii shall be equal to or less than 1/60 second or a time interval required to deliver 5 mAs, whichever is greater;

iv. either the product of peak X-ray tube potential, current, and exposure time shall be limited to not more than 60 kWs per exposure, or the product of X-ray tube current and exposure time shall be limited to not more than 600 mAs per exposure, except that when the X-ray tube potential is less than 50 kVp, the product of X-ray tube current and exposure time shall be limited to not more than 2,000 mAs per exposure; and

v. a visible signal shall indicate when an exposure has been terminated at the limits required, and manual resetting shall be required before further automatically timed exposures can be made.

3. Exposure Indication. The X-ray exposure control shall provide visual or audible indication of X-ray production observable at or from the operator's protected position whenever X-rays are produced.

4. Exposure Duration (Timer) Reproducibility. With a timer setting of 0.5 seconds or less, the difference between the maximum exposure time (T_{max}) and the minimum exposure time (T_{min}) shall be less than or equal to 10 percent of the average exposure time (T), when four timer tests are performed:

$$(T_{max} - T_{min}) \leq 0.1T$$

5. Exposure Control Location. The X-ray exposure control shall be so placed that the operator can view the patient while making any exposure.

6. Operator Protection Except for Veterinary Systems and Panoramic Dental Systems. The following requirements shall be met:

a. stationary X-ray systems shall be required to have the X-ray control permanently mounted in a protected area so that the operator is required to remain in that protected area during the entire exposure; and

b. mobile and portable X-ray systems that are:

i. used continuously for more than one week in the same location, e.g., a room or suite, shall meet the requirements of Subparagraph B.6.a of this Section; and

ii. used for less than one week in the same location shall be provided with either a protective barrier at

least 6.5 feet (2 meters) high for operator protection during exposures, or means shall be provided to allow the operator to be at least 12 feet (3.7 meters) from the tube housing assembly during the exposure.

7. Operator Protection for Veterinary Systems and Panoramic Dental Systems. All stationary, mobile, or portable X-ray systems used for veterinary work or panoramic dental systems shall be provided with either a 6.5 foot (2 meters) high protective barrier for operator protection during exposures, or shall be provided with means to allow the operator to be at least 12 feet (3.7 meters) from the tube housing assembly during exposures.

C. Source-to-Skin Distance. All mobile or portable radiographic systems shall be provided with means to limit the source-to-skin distance to be equal to or greater than 30 centimeters.

D. Exposure Reproducibility. When all technique factors are held constant, including control panel selections associated with automatic exposure control (phototiming) systems, the coefficient of variation of exposure for both manual and phototimed systems shall not exceed 0.05. This requirement shall be deemed to have been met if, when four exposures are made at identical technique factors, the difference between the maximum exposure (E_{max}) and the minimum exposure (E_{min}) shall be less than or equal to 10 percent of the average exposure (E):

$$(E_{\max} - E_{\min}) \leq 0.1\,E$$

E. Radiation from Capacitor Energy Storage Equipment in Standby Status. Radiation emitted from the X-ray tube when the exposure switch or timer is not activated shall not exceed a rate of 2 milliroentgens (0.516 μC/kg) per hour at 5 centimeters from any accessible surface of the diagnostic source assembly, with the beam-limiting device fully open.

F. Accuracy. Deviation of technique factors from indicated values shall not exceed the limits specified for that system by its manufacturer. In the absence of manufacturer's specifications, the deviation shall not exceed 10 percent of the indicated value.

G. Linearity, Uncertified X-Ray Systems Only. The following requirements apply when the equipment is operated on a power supply as specified by the manufacturer for any fixed X-ray tube potential within the range of 40 percent to 100 percent of the maximum rated.

1. Equipment Having Independent Selection of X-Ray Tube Current (mA). The average ratios of exposure to the indicated milliampere-seconds product (C/kg/mAs or mR/mAs) obtained at any two tube current settings shall not differ by more than 0.10 times their sum. This is:

$$(X_1 - X_2) \leq 0.10\,(X_1 + X_2)$$

where X_1 and X_2 are the average C/kg/mAs (or mR/mAs) values obtained at any two tube current settings.

2. Equipment Having a Combined X-Ray Tube Current Exposure Time Product (mAs) Selector, But Not a Separate Tube Current (mA) Selector. The average ratios of exposure to the indicated milliampere-seconds product (C/kg/mAs or mR/mAs) obtained at any 2 mAs selector settings shall not differ by more than 0.10 times their sum. This is:

$$(X_1 - X_2) \leq 0.10\,(X_1 + X_2)$$

where X_1 and X_2 are the average C/kg/mAs (or mR/mAs) values obtained at any 2 mAs selector settings.

3. Measuring Compliance. Determination of compliance shall be based on four exposures, of no less than 0.05 seconds each, taken within a time period of one hour, at each of the two settings. These two settings may include any two focal spot sizes provided that neither focal spot size is equal to or less than 0.45 millimeter, in which case the two settings shall be restricted to the same focal spot size. For purposes of this requirement, focal spot size is the nominal focal spot size specified by the X-ray tube manufacturer.

H. Additional Requirements Applicable to Certified Systems Only. Diagnostic X-ray systems incorporating one or more certified component(s) shall be required to comply with the following additional requirement(s) which relate to that certified component(s).

1. Linearity. When the equipment allows for a choice of X-ray tube current settings and is operated on a power supply as specified by the manufacturer in accordance with the requirements of applicable federal standards, for any fixed X-ray tube potential within the range of 40 percent to 100 percent of the maximum rating, the average ratios of exposure to the indicated milliampere-seconds product obtained at any two consecutive tube current settings shall not differ by more than 0.10 times their sum:

$$(X_1 - X_2) \leq 0.10\,(X_1 + X_2)$$

where X_1 and X_2 are the average mR/mAs (C/kg/mAs) values obtained at each of two consecutive tube current settings.

2. Beam Limitation for Stationary and Mobile General Purpose X-Ray Systems. The following requirements apply:

a. there shall be provided a means of stepless adjustment of the size of the X-ray field. The minimum field size at an SID of 100 centimeters shall be equal to or less than 5 centimeters by 5 centimeters; and

b. when a light localizer is used to define the X-ray field, it shall provide an average illumination of not less than 160 lux or 15 footcandles at 100 centimeters or at the maximum SID, whichever is less. The average illumination

shall be based upon measurements made in the approximate center of each quadrant of the light field. Radiation therapy simulation systems manufactured on and after May 27, 1980, are exempt from this requirement.

3. Beam Limitation for Portable X-Ray Systems. Beam limitation for portable X-ray systems shall meet the beam limitation requirements of LAC 33:XV.606.A.1 and 606.H.2.

4. Beam Limitation and Alignment on Stationary General Purpose X-Ray Systems. For stationary, general purpose X-ray systems that contain a tube housing assembly, an X-ray control, and for those systems so equipped, a table, all certified in accordance with 21 CFR 1020.30(c), the following requirements apply.

a. Positive beam limitation (PBL) shall be provided whenever all the following conditions are met:

i. the image receptor is inserted into a permanently mounted cassette holder;

ii. the image receptor length and width are each less than 50 centimeters;

iii. the X-ray beam axis is within ±3 degrees of vertical, and the SID is 90 centimeters to 130 centimeters inclusive, or the X-ray beam axis is within ±3 degrees of horizontal, and the SID is 90 centimeters to 205 centimeters inclusive;

iv. the X-ray beam axis is perpendicular to the plane of the image receptor to within ±3 degrees;

v. neither tomographic nor stereoscopic radiography is being performed; and

vi. the PBL system has not been intentionally overridden. This override provision is subject to LAC 33:XV.606.H.4.c.

b. Positive beam limitation (PBL) shall prevent the production of X-rays when:

i. either the length or width of the X-ray field in the plane of the image receptor differs, except as permitted by LAC 33:XV.606.H.4.e, from the corresponding image receptor dimensions by more than 3 percent of the SID; or

ii. the sum of the length and width differences as stated in LAC 33:XV.606.H.4.b.i without regard to sign exceeds 4 percent of the SID.

c. If a means of overriding the positive beam limitation (PBL) system exists, that means shall meet the following criteria:

i. the means of overriding the PBL system shall be designed for use only in the event of PBL system failure or if the system is being serviced; and

ii. if in a position that the operator would consider it part of the operational controls or if it is referenced in the operator's manual or in other materials intended for the operator, the means for overriding the PBL system:

(a). shall require that a key be utilized to defeat the PBL;

(b). shall require that the key remain in place during the entire time the PBL system is overridden; and

(c). shall require that the key or key switch be clearly and durably labeled as follows:

FOR X-RAY FIELD LIMITATION
SYSTEM FAILURE

d. compliance with LAC 33:XV.606.H.4.b shall be determined when the equipment indicates that the beam axis is perpendicular to the plane of the image receptor and the provisions of LAC 33:XV.606.H.4.a are met. Compliance shall be determined no sooner than five seconds after insertion of the image receptor;

e. the positive beam limitation system shall be capable of operation, at the discretion of the operator, such that the size of the field may be made smaller than the size of the image receptor through stepless adjustment of the field size. The minimum field size at an SID of 100 centimeters shall be equal to or less than 5 centimeters by 5 centimeters; and

f. the positive beam limitation system shall be designed such that if a change in image receptor does not cause an automatic return to positive beam limitation function as described in LAC 33:XV.606.H.4.b, then any change of image receptor size or SID must cause the automatic return.

5. Transmission Limit for Image Receptor Supporting Devices Used for Mammography. For X-ray systems manufactured after September 5, 1978, that are designed only for mammography, the transmission of the primary beam through any image receptor support provided with the system shall be limited such that the exposure 5 centimeters from any accessible surface beyond the plane of the image receptor supporting device does not exceed 0.1 milliroentgen (25.8 nC/kg) for each activation of the tube. Exposure shall be measured with the system operated at the minimum SID for which it is designed. Compliance shall be determined at the maximum rated peak tube potential for the system and at the maximum rated product of tube current and exposure time (mAs) for that peak tube potential. Compliance shall be determined by measurements averaged over an area of 100 square centimeters with no linear dimension greater than 20 centimeters.

I. Tube Stands for Portable X-Ray Systems. A tube stand or other mechanical support shall be used for portable X-ray systems so that the X-ray tube housing assembly need not be hand-held during exposures.

AUTHORITY NOTE: Promulgated in accordance with R.S. 30:2001 et seq.

HISTORICAL NOTE: Promulgated by the Department of Environmental Quality, Nuclear Energy Division, LR 13:569 (October 1987), amended by the Office of Air Quality and Radiation Protection, Radiation Protection Division, LR 19:1421 (November 1993), amended by the Office of Environmental

Assessment, Environmental Planning Division, LR 26:2586 (November 2000), LR 27:1237 (August 2001).

§607. Intraoral Dental Radiographic Systems

A. In addition to the provisions of LAC 33:XV.603 and 604, the requirements of this Section apply to X-ray equipment and associated facilities used for dental radiography. Requirements for extraoral dental radiographic systems are covered in LAC 33:XV.603 and 606.

1. Source-to-Skin Distance. X-ray systems designed for use with an intraoral image receptor shall be provided with means to limit source- to-skin distance to not less than 18 centimeters.

2. Field Limitation. The following requirements shall be met:

a. radiographic systems designed for use with an intraoral image receptor shall be provided with means to limit the X-ray field such that the X-ray field at the minimum SSD shall be containable in a circle having a diameter of no more than 7 centimeters;

b. an opened-ended, shielded PID (position-indicating device) shall be used. The shielding shall be equivalent to the requirements of LAC 33:XV.604.A.3; and

c. the operator shall position the end of the PID as close as practicable to the skin of the patient.

3. Radiation Exposure Control for Certified and Noncertified Systems. The following requirements shall be met.

a. Exposure Initiation

i. Means shall be provided to initiate the radiation exposure by a positive action on the part of the operator, such as the depression of a switch. Radiation exposure shall not be initiated without such a positive action; and

ii. it shall not be possible to make an exposure when the timer is set to a "zero" or "off" position if either position is provided.

b. Exposure Termination

i. Means shall be provided to terminate the exposure at a preset time interval, preset product of current and time, preset number of pulses, or preset radiation exposure to the image receptor;

ii. an X-ray control shall be incorporated into each X-ray system such that an exposure can be terminated by the operator at any time, except for exposures of ½ second or less; and

iii. termination of an exposure shall cause automatic resetting of the timer to its initial setting or to "zero."

c. Exposure Indication. The X-ray control shall provide visual or audible indication observable at or from the operator's protected position whenever X-rays are produced.

d. Exposure Duration (Timer) Reproducibility. With a timer setting of 0.5 seconds or less, the difference between the maximum exposure time (T_{max}) and the minimum exposure time (T_{min}) shall be less than or equal to 10 percent of the average time (T), when four timing tests are performed:

$$(T_{max} - T_{min}) \leq 0.10\,T$$

e. Exposure Control Location and Operator Protection. Each X-ray control shall be located in such a way as to meet the following requirements.

i. The intraoral dental X-ray systems shall be operated from a protected area and shall be provided with either a protective barrier at least 6.5 feet (2.0 m) high for operator protection or means to allow the operator to be at least 12 feet (3.7 m) from the tube housing assembly while making exposures; and

ii. the operator's protected area shall provide means to view the patient during the X-ray procedure.

4. Exposure Reproducibility. The coefficient of variation shall not exceed 0.05 when all technique factors are held constant. This requirement shall be deemed to have been met if, when four exposures are made within a period of one hour at identical technique factors, the difference between the maximum exposure value (E_{max}) and the minimum exposure value (E_{min}) shall be less than or equal to 10 percent of the average exposure (E):

$$(E_{max} - E_{min}) \leq 0.10\,E$$

5. Linearity. When the equipment allows a choice of X-ray tube current settings and is operated on a power supply as specified by the manufacturer for any fixed X-ray tube potential within the range of 40 to 100 percent of the maximum rating, the average ratios of exposure to the indicated milliampere-seconds product obtained at any two consecutive tube current settings shall not differ by more than 0.10 times their sum:

$$(X_1 - X_2) \leq 0.10\,(X_1 + X_2)$$

where X_1 and X_2 are the average mR/mAs values obtained at each of two consecutive tube current settings.

6. Accuracy. Deviation of technique factors from indicated values shall not exceed the limits specified for that system by its manufacturer. In the absence of manufacturer's specification the deviation shall not exceed 10 percent of the indicated value.

7. kVp Limitations. Dental X-ray machines with a nominal fixed kVp of less than 50 kVp shall not be used to make diagnostic dental radiographs of humans.

8. Administrative controls include the following:

a. patient and film holding devices shall be used when the techniques permit;

b. the tube housing and the PID shall not be hand-held during an exposure;

c. the X-ray system shall be operated in such a manner that the useful beam at the patient's skin does not exceed the requirements of LAC 33:XV.607.A.2.a; and

d. dental fluoroscopy without image intensification shall not be used.

AUTHORITY NOTE: Promulgated in accordance with R.S. 30:2001 et seq.

HISTORICAL NOTE: Promulgated by the Department of Environmental Quality, Nuclear Energy Division, LR 13:569 (October 1987), amended by the Office of Air Quality and Radiation Protection, Radiation Protection Division, LR 19:1421 (November 1993).

§608. Therapeutic X-Ray Systems of Less Than 1 MeV

A. Equipment Requirements

1. Leakage Radiation. When the tube is operated at its leakage technique factors, the leakage radiation shall not exceed the value specified at the distance specified for the classification of that X-ray system, as follows.

a. Contact Therapy Systems. Leakage radiation shall not exceed 100 milliroentgens (25.8 μC/kg) per hour at 5 centimeters from the surface of the tube housing assembly.

b. 0-150 kVp Systems. Systems that were manufactured or installed prior to April 20, 1977, shall have a leakage radiation that does not exceed 1 roentgen (0.258 mC/kg) in one hour at 1 meter from the source.

c. 0-150 kVp Systems. Systems manufactured on or after April 20, 1977, shall have a leakage radiation that does not exceed 100 milliroentgens (25.8 μC/kg) in one hour at 1 meter from the source; and

d. 151-999 kVp Systems. Leakage radiation shall not exceed 1 roentgen (0.258 mC/kg) in one hour at 1 meter from the source, except that systems that operate in excess of 500 kVp may have a leakage radiation at 1 meter from the source not to exceed 0.1 percent of the useful beam 1 meter from the source.

2. Permanent Beam-Limiting Devices. Permanent fixed diaphragms or cones used for limiting the useful beam shall provide the same or a higher degree of protection as required for the tube housing assembly.

3. Removable and Adjustable Beam-Limiting Devices. These devices shall meet the following requirements:

a. removable beam-limiting devices shall, for the portion of the useful beam to be blocked by these devices, transmit not more than 1 percent of the useful beam at the maximum kilovoltage and maximum treatment filter. The requirement does not apply to auxiliary blocks or materials placed in the useful beam to shape the useful beam to the individual patient;

b. adjustable beam-limiting devices installed after April 20, 1977, shall meet the requirements of LAC 33:XV.608.A.3.a; and

c. adjustable beam-limiting devices installed before April 20, 1977, shall, for the portion of the X-ray beam to be blocked by these devices, transmit not more than 5 percent of the useful beam at the maximum kilovoltage and maximum treatment filter.

4. Filtration. The filter system shall be so designed that it meets the following requirements:

a. the filters cannot be accidentally displaced at any possible tube orientation;

b. each filter is marked as to its material of construction and its thickness. For wedge filters, the wedge angle shall appear on the wedge or wedge tray;

c. it shall be possible for the operator to determine the presence or absence of each filter and the operation of each wedge filter in the useful beam when the operator is at his or her position at the control panel either by display at the control panel or by direct observation; and

d. the radiation at 5 centimeters from the filter insertion slot opening does not exceed 30 roentgens (7.74 mC/kg) per hour under any operating condition.

5. Tube Immobilization. The tube housing assembly shall be capable of being immobilized for stationary treatments.

6. Focal Spot Marking. The tube housing assembly shall be so marked that it is possible to determine the location of the focal spot to within 5 millimeters, and such marking shall be readily accessible for use during calibration procedures.

7. Beam Block. Contact therapy tube housing assemblies shall have a removable shield of at least 0.5 millimeter lead equivalency at 100 kVp that can be positioned over the entire useful beam exit port during periods when the beam is not in use.

8. Beam Monitor System. Systems of greater than 150 kVp manufactured after April 20, 1977, shall be provided with a beam monitor system that:

a. shall have the detector of the monitor system interlocked to prevent incorrect positioning;

b. shall not allow irradiation until a preselected value of exposure has been made at the treatment control panel;

c. shall independently terminate irradiation when the preselected exposure has been reached;

d. shall be so designed that, in the event of a system malfunction or electrical power failure, the dose administered to a patient prior to the system malfunction or power failure can be accurately determined;

e. shall have a display at the control panel from which the dose at a reference point in soft tissue can be calculated;

f. shall have a control panel display that maintains the administered dose reading until intentionally reset to zero; and

g. shall have a control panel display that does not have scale multiplying factors and utilizes a design such that increasing dose is displayed by increasing numbers.

9. Timer. Requirements for timers are as follows:

a. a timer that has a display shall be provided at the treatment control panel. The timer shall have a preset time selector and an elapsed time indicator;

b. the timer shall be a cumulative timer that activates with the production of radiation and retains its reading after irradiation is interrupted or terminated. After irradiation is terminated and before irradiation can be reinitiated, it shall be necessary to reset the elapsed time indicator to zero;

c. the timer shall terminate irradiation when a preselected time has elapsed if any dose monitoring system present has not previously terminated irradiation;

d. the timer shall permit accurate presetting and determination of exposure times as short as one second;

e. the timer shall not permit an exposure if set at zero; and

f. the timer shall not activate until the shutter is opened when irradiation is controlled by a shutter mechanism.

10. Control Panel Functions. The control panel, in addition to the displays required in other provisions of LAC 33:XV.608, shall have:

a. an indication of whether electrical power is available at the control panel and if activation of the X-ray tube is possible;

b. an indication of whether X-rays are being produced;

c. a means for indicating X-ray tube potential and current;

d. a means for terminating an exposure at any time;

e. a locking device that will prevent unauthorized use of the X-ray system; and

f. for X-ray systems manufactured after April 20, 1977, a positive display of specific filter(s) in the beam.

11. Multiple Tubes. When a control panel may energize more than one X-ray tube, the following requirements apply:

a. it shall be possible to activate only one X-ray tube at any time;

b. there shall be an indication at the control panel identifying which X-ray tube is energized; and

c. there shall be an indication at the tube housing assembly when that tube is energized.

12. Source-to-Skin Distance. There shall be means of determining the SSD to within 1 centimeter.

13. Shutters. Unless it is possible to bring the X-ray output to the prescribed exposure parameters within five seconds, the beam shall be automatically attenuated by a shutter having a lead equivalency not less than that of the tube housing assembly. In addition:

a. after the unit is at operating parameters, the shutter shall be controlled electrically by the operator from the control panel; and

b. an indication of shutter position shall appear at the control panel.

14. Low-Filtration X-Ray Tubes. Each X-ray system equipped with a beryllium or other low-filtration window shall be clearly labeled as such upon the tube housing assembly and at the control panel.

B. Facility Design Requirements for X-Ray Systems Capable of Operating above 50 kVp

1. Aural Communication. Provision shall be made for two-way aural communication between the patient and the operator at the control panel. However, where excessive noise levels or treatment requirements make aural communication impractical, other methods of communication shall be used.

2. Viewing Systems. Provisions shall be made as follows:

a. windows, mirrors, closed-circuit television, or an equivalent system shall be provided to permit continuous observation of the patient during irradiation and shall be so located that the operator can observe the patient from the control panel; and

b. when the primary viewing system is by electronic means, an alternate viewing system, which may be electronic, shall be available for use in the event of failure of the primary viewing system.

3. Additional Requirements for X-Ray Systems Capable of Operation above 150 kVp. Additional requirements are:

a. all protective barriers shall be fixed except for entrance doors or beam interceptors;

b. the control panel shall be located outside the treatment room;

c. entrance interlocks shall be provided such that all entrance doors must be closed before treatment can be initiated or continued. If the radiation beam is interrupted by any door opening, it shall not be possible to restore the machine to operation without closing the door and reinitiating irradiation by manual action at the control panel; and

d. when any door referred to in LAC 33:XV.608.B.3.c is opened while the X-ray tube is activated, the exposure at a distance of 1 meter from the source shall be reduced to less than 100 milliroentgens (25.8 μC/kg) per hour.

C. Surveys, Calibrations, Spot Checks, and Operating Procedures

1. Survey requirements are as follows:

a. all new facilities, and existing facilities not previously surveyed, shall have a survey made by, or under the direction of, a qualified expert. In addition, such surveys shall be done after any change in the facility or equipment that might cause a significant increase in radiation hazard;

b. the registrant or licensee shall obtain a written report of the survey from the qualified expert, and a copy of the report shall be transmitted by the registrant or licensee to the Office of Environmental Compliance, Emergency and Radiological Services Division, within 30 calendar days of receipt of the report; and

c. the survey and report shall indicate all instances where the installation, in the opinion of the qualified expert, is in violation of applicable rules.

2. Calibrations shall be performed as follows:

a. the calibration of an X-ray system shall be performed at intervals not to exceed one year and after any change or replacement of components that could cause a change in the radiation output;

b. the calibration of the radiation output of the X-ray system shall be performed by, or under the direction of, a qualified expert who is physically present at the facility during such calibration;

c. calibration of the radiation output of an X-ray system shall be performed with a calibrated dosimetry system. The calibration of such system shall be traceable to a national standard. The system shall have been calibrated within the preceding two years;

d. the calibrations shall be such that the dose at a reference point in soft tissue can be calculated to within an uncertainty of 5 percent;

e. the calibration of the X-ray system shall include, but not be limited to, the following determinations:

i. verification that the X-ray system is operating in compliance with the design specifications;

ii. the exposure rates as a function of field size, technique factors, filter, and treatment distance used;

iii. the degree of congruence between the radiation field and the field indicated by the localizing device if such device is present; and

iv. an evaluation of the uniformity of the largest radiation field used;

f. records of calibration shall be maintained by the registrant or licensee for five years after completion of the calibration at the facility of use; and

g. a copy of the most recent X-ray system calibration shall be available at or in the area of the control panel.

3. Spot checks shall be performed on X-ray systems capable of operation at greater than 150 kVp. Such spot checks shall meet the following requirements:

a. the spot-check procedures shall be in writing and shall have been developed by a qualified expert. A copy of the procedures shall be submitted to the Office of Environmental Compliance, Emergency and Radiological Services Division, prior to their implementation;

b. if a qualified expert does not perform the spot-check measurement, the results of the spot-check measurements shall be reviewed by a qualified expert within 15 calendar days;

c. the spot-check procedures shall specify the frequency at which tests or measurements are to be performed. The spot-check procedures shall specify that the spot check shall be performed during the calibration specified in LAC 33:XV.608.C.2. The acceptable tolerance for each parameter measured in the spot check when compared to the value for that parameter determined in the calibration specified in LAC 33:XV.608.C.2 shall be stated;

d. the cause for a parameter exceeding a tolerance set by the qualified expert shall be investigated and corrected before the system is used for patient irradiation;

e. whenever a spot check indicates a significant change in the operating characteristics of a system, as specified in the qualified expert's spot-check procedures, the system shall be recalibrated as required in LAC 33:XV.608.C.2;

f. records of spot-check measurements shall be maintained by the registrant or licensee for two years after completion of the spot-check measurements and any necessary corrective actions at the facility of use; and

g. where a spot check involves a radiation measurement, such measurement shall be obtained using a system satisfying the requirements of LAC 33:XV.608.C.2 or that has been intercompared with a system meeting those requirements within the previous year.

4. Operating procedures shall include the following:

a. X-ray systems shall not be left unattended unless the system is secured against unauthorized use;

b. when a patient must be held in position for radiation therapy, mechanical supporting or restraining devices shall be used;

c. the tube housing assembly shall not be held by hand during operation unless the system is designed to require such holding, and the peak tube potential of the system does not exceed 50 kVp. In such cases, the holder

shall wear protective gloves and apron of not less than 0.5 mm lead equivalency at 100 kVp;

d. no individual other than the patient shall be in the treatment room unless such individual is protected by a barrier sufficient to meet the requirements of LAC 33:XV.410. No individual other than the patient shall be in the treatment room during exposures from X-ray systems operating above 150 kVp; and

e. the X-ray system shall not be used in the administration of radiation therapy unless the requirements of LAC 33:XV.608.C.2 and 608.C.3.e have been met.

AUTHORITY NOTE: Promulgated in accordance with R.S. 30:2001 et seq

HISTORICAL NOTE: Promulgated by the Department of Environmental Quality, Nuclear Energy Division, LR 13:569 (October 1987), amended by the Office of Air Quality and Radiation Protection, Radiation Protection Division, LR 19:1421 (November 1993), amended by the Office of Environmental Assessment, Environmental Planning Division, LR 26:2586 (November 2000), amended by the Office of the Secretary, Legal Affairs Division, LR 31:2532 (October 2005).

§609. X-Ray and Electron Therapy Systems with Energies of 1 MeV and Above

A. LAC 33:XV.Chapter 9, except LAC 33:XV.911.C and D, shall apply to medical facilities using therapy systems with energies of 1 MeV and above.

B. In addition to the definitions provided in LAC 33:XV.602, the following definitions shall be applicable to LAC 33:XV.609:

Applicator—a structure that determines the extent of the treatment field at a given distance from the virtual source.

Beam-Scattering Filter—a filter used to scatter a beam of electrons.

Central Axis of the Beam—a line passing through the virtual source and the center of the plane figure formed by the edge of the first beam-limiting device.

Dose Monitor Unit—a unit response from the dose-monitoring system from which the absorbed dose can be calculated.

Dose-Monitoring System—a system of devices for the detection, measurement, and display of quantities of radiation.

Existing Equipment—therapy systems subject to LAC 33:XV.609 that were manufactured on or before January 1, 1985.

Field-Flattening Filter—a filter used to provide dose uniformity over the area of a useful beam of X-rays at a specified depth.

Field Size—the dimensions along the major axes of an area in a plane perpendicular to the specified direction of the beam of incident radiation at the normal treatment distance and defined by the intersection of the major axes and the 50 percent isodose line.

Gantry—that part of the system supporting and allowing possible movements of the radiation head.

Interruption of Irradiation—the stopping of irradiation with the possibility of continuing irradiation without resetting of operating conditions at the control panel.

Isocenter—a fixed point in space located at the center of the smallest sphere through which the central axis of the beam passes in all conditions. The sphere is described by the intersection of the axes of rotation of the gantry, the collimator, and the couch.

Moving Beam Therapy—radiation therapy with relative displacement of the useful beam and the patient during irradiation. It includes arc therapy, skip therapy, and rotational therapy.

New Equipment—systems subject to LAC 33:XV.609 that were manufactured after January 1, 1985.

Nominal Treatment Distance—

a. for electron irradiation, the nominal source-to-surface distance along the central axis of the useful beam as specified by the manufacturer for the applicator;

b. for X-ray irradiation, the nominal source-to-isocenter distance along the central axis of the useful beam. For non-isocentric equipment, this distance shall be that specified by the manufacturer.

Radiation Head—the structure from which the useful beam emerges.

Shadow Tray—a device attached to the radiation head to support auxiliary beam limiting material.

Stationary Beam Therapy—radiation therapy without relative displacement of the useful beam and the patient during irradiation.

Target—that part of a radiation head that by design intercepts a beam of accelerated particles with subsequent emission of other radiation.

Virtual Source—a point from which radiation appears to originate.

C. Requirements for Equipment

1. Leakage Radiation to the Patient Area. Requirements are as follows:

a. new equipment and existing equipment manufactured or installed after April 20, 1977, shall meet the following requirements:

i. for operating conditions producing maximum leakage radiation, the absorbed dose in rads (centigrays) due to leakage radiation, including X-rays, electrons, and neutrons, at any point in a circular plane of 2 meters radius centered on and perpendicular to the central axis of the beam at the isocenter or normal treatment distance and outside the maximum useful beam size, shall not exceed 0.1 percent of the maximum absorbed dose in rads (centigrays) of the unattenuated useful beam measured at the point of intersection of the central axis of the beam and the plane

surface. Measurements excluding those for neutrons shall be averaged over an area up to but not exceeding 100 square centimeters at the positions specified. Measurements of the portion of the leakage radiation dose contributed by neutrons shall be averaged over an area up to but not exceeding 200 square centimeters; and

ii. for each system, the registrant or licensee shall determine or obtain from the manufacturer the leakage radiation existing at the positions specified in LAC 33:XV.609.C.1.a.i for the specified operating conditions. Records on leakage radiation measurements shall be maintained for inspection by the department; and

b. existing equipment shall meet the following requirements:

i. for operating conditions producing maximum leakage radiation, the absorbed dose in rads (centigrays) due to leakage radiation excluding neutrons at any point in a circular plane of 2 meters radius centered on a perpendicular to the central axis of the beam 1 meter from the nominal source, and outside the maximum size useful beam, shall not exceed 0.1 percent of the maximum absorbed dose in rads (centigrays) of the unattenuated useful beam measured at the point of intersection of the central axis of the beam and the surface of the circular plane. Measurements shall be averaged over an area up to but not exceeding 100 square centimeters at the positions specified; and

ii. for each system, the registrant or licensee shall determine or obtain from the manufacturer the leakage radiation existing at the positions specified in LAC 33:XV.609.C.1.b.i for the specified operating conditions. Records on radiation leakage shall be maintained for inspection by the department.

2. Leakage Radiation Outside the Patient Area for New Equipment. Requirements are as follows:

a. the absorbed dose in rads (centigrays) due to leakage radiation except in the area specified in LAC 33:XV.609.C.1.a.i when measured at any point 1 meter from the path of the charged particle, before the charged particle strikes the target window, shall not exceed 0.1 percent for X-ray leakage nor 0.05 percent for neutron leakage of the maximum absorbed dose in rads (grays) of the unattenuated useful beam measured at the point of intersection of the central axis of the beam and the circular plan specified in LAC 33:XV.609.C.1.a.i; and

b. the registrant or licensee shall determine or obtain from the manufacturer the actual leakage radiation existing at the positions specified in LAC 33:XV.609.C.2.a for specified operating conditions. Radiation measurements excluding neutrons shall be averaged over an area up to but not exceeding 100 square centimeters. Neutron measurements shall be averaged over an area up to but not exceeding 200 square centimeters.

3. Reserved.

4. Beam-Limiting Devices. Adjustable or interchangeable beam-limiting devices shall be provided, and such devices shall transmit no more than 2 percent of the useful beam at the normal treatment distance for the portion of the useful beam that is to be attenuated by the beam-limiting device. The neutron component of the useful beam shall not be included in this requirement.

5. Filters. Filters shall meet the following requirements:

a. each filter that is removable from the system shall be clearly marked with an identification number. Documentation available at the control panel shall contain a description of the filter. For wedge filters, the wedge angle shall appear on the wedge or wedge tray;

b. if the absorbed dose rate data required by LAC 33:XV.609.C.16 relates exclusively to operation with a field-flattening or beam-scattering filter in place, such filter shall be removable only by the use of tools; and

c. for new equipment that utilizes a system of wedge filters, interchangeable field-flattening filters, or interchangeable beam-scattering filters:

i. irradiation shall not be possible until a selection of a filter has been made at the treatment control panel;

ii. an interlock system shall be provided to prevent irradiation if the filter selected is not in the correct position;

iii. a display shall be provided at the treatment control panel showing the filter(s) in use; and

iv. an interlock shall be provided to prevent irradiation if any filter selection operation carried out in the treatment room does not agree with the filter selection operation carried out at the treatment control panel.

6. Beam Quality. The registrant or licensee shall determine, or obtain from the manufacturer, data sufficient to assure that the following beam quality requirements are met:

a. the absorbed dose resulting from X-rays in a useful electron beam at the point on the central axis of the beam 10 centimeters greater than the practical range of the electrons shall not exceed the values stated in Table 2. Linear interpolation shall be used for values not stated:

Table 2

Maximum Energy of Electron Beam in MeV	X-Ray Absorbed Dose as a Fraction of Maximum Absorbed Dose
1	0.03
15	0.05
35	0.10
50	0.20

b. compliance with LAC 33:XV.609.C.6.a shall be determined using:

i. a measurement within a phantom with the incident surface of the phantom at the normal treatment distance and normal to the central axis of the beam;

ii. the largest field size available that does not exceed 15 by 15 centimeters; and

iii. a phantom whose cross-sectional dimensions exceed the measurement radiation field by at least 5 centimeters and whose depth is sufficient to perform the required measurement;

c. the absorbed dose at a surface located at the normal treatment distance, at the point of intersection of that surface with the central axis of the useful beam during X-ray irradiation, shall not exceed the limits stated in Table 3. Linear interpolation shall be used for values not stated.

Table 3

Maximum Photon Energy in MeV	Absorbed Dose at the Surface as a Fraction of the Maximum Absorbed Dose
1	0.80
2	0.70
5	0.60
15	0.50
35	0.40
50	0.20

d. compliance with LAC 33:XV.609.C.6.c shall be determined by measurements made:

i. within a phantom using an instrument that will allow extrapolation to the surface absorbed dose;

ii. using a phantom whose size and placement meet the requirements of LAC 33:XV.609.C.6.b;

iii. after removal of all beam modifying devices that can be removed without the use of tools, except for beam-scattering or field-flattening filters; and

iv. using the largest field size available that does not exceed 15 by 15 centimeters; and

e. the registrant or licensee shall determine, or obtain from the manufacturer, the maximum percentage absorbed dose in the useful beam due to neutrons, excluding stray neutron radiation, for specified operating conditions.

7. Beam Monitors. All therapy systems shall be provided with radiation detectors in the radiation head. The following requirements apply:

a. new equipment shall be provided with at least two radiation detectors. The detectors shall be incorporated into two separate dose-monitoring systems;

b. existing equipment shall be provided with at least one radiation detector. This detector shall be incorporated into a primary dose-monitoring system; and

c. the detector and the system into which that detector is incorporated shall meet the following requirements:

i. each detector shall be removable only with tools and shall be interlocked to prevent incorrect positioning;

ii. each detector shall form part of a dose-monitoring system from whose readings in dose monitor units the absorbed dose at a reference point in the treatment volume can be calculated;

iii. each dose-monitoring system shall be capable of independently monitoring, interrupting, and terminating irradiation;

iv. for new equipment, the design of the dose-monitoring systems shall assure that:

(a). the malfunctioning of one system shall not affect the correct functioning of the second system; and

(b). the failure of any element common to both systems that could affect the correct function of both systems shall terminate irradiation; and

v. each dose-monitoring system shall have a legible display at the treatment control panel. For new equipment, each display shall:

(a). maintain a reading until intentionally reset to zero;

(b). have only one scale and no scale multiplying factors;

(c). utilize a design such that increasing dose is displayed by increasing numbers and shall be so designed that, in the event of an overdosage of radiation, the absorbed dose may be accurately determined; and

(d). in the event of power failure, the dose-monitoring information required by LAC 33:XV.609.C.7.c.v displayed at the control panel at the time of failure shall be retrievable in at least one system for a 20-minute period of time.

8. Beam Symmetry. In new equipment inherently capable of producing useful beams with asymmetry exceeding 5 percent, the asymmetry of the radiation beam in two orthogonal directions shall be monitored before the beam passes through the beam-limiting device. Facilities shall be provided so that, if the difference in dose rate between one region and another region symmetrically displaced from the central axis of the beam exceeds 5 percent of the central axis dose rate, indication of this condition is made at the control panel, and if this difference exceeds 10 percent, the irradiation is terminated.

9. Selection and Display of Dose Monitor Units. The following requirements shall be met:

a. irradiation shall not be possible until a selection of a number of dose monitor units has been made at the treatment control panel;

b. after termination of irradiation, it shall be necessary to reset the dosimeter display to zero before subsequent treatment can be initiated;

c. the preselected number of dose monitor units shall be displayed at the treatment control panel until reset manually for the next irradiation; and

d. for new equipment, after termination of irradiation, it shall be necessary to manually reset the preselected dose monitor units before irradiation can be initiated.

10. Termination of Irradiation by the Dose-Monitoring System or Systems During Stationary Beam Therapy. The following requirements shall be met:

a. if the original design of the equipment included a second dose-monitoring system, that system shall be capable of terminating irradiation when not more than 15 percent or 40 dose monitor units above the preselected number of dose monitor units set at the control panel have been detected by the second dose-monitoring system;

b. each primary system shall terminate irradiation when the preselected number of dose monitor units has been detected by the system;

c. for new equipment, a second dose-monitoring system shall be present. That system shall be capable of terminating irradiation when not more than 10 percent or 25 dose monitor units above the preselected number of dose monitor units set at the control panel have been detected by the second dose-monitoring system; and

d. for new equipment, an indicator on the control panel shall show which dose-monitoring system has terminated irradiation.

11. Interruption Switches. It shall be possible to interrupt irradiation and equipment movements at any time from the operator's position at the treatment control panel. Following an interruption, it shall be possible to restart irradiation by operator action without any reselection of operating conditions. If any change is made of a preselected value during an interruption, irradiation and equipment movements shall be automatically terminated.

12. Termination Switches. It shall be possible to terminate irradiation and equipment movements, or go from an interruption condition to termination conditions, at any time from the operator's position at the treatment control panel.

13. Timer. Requirements for timers are as follows:

a. a timer that has a display shall be provided at the treatment control panel. The timer shall have a preset time selector and an elapsed time indicator;

b. the timer shall be a cumulative timer that activates with the production of radiation and retains its reading after irradiation is interrupted or terminated. After irradiation is terminated and before irradiation can be reinitiated, it shall be necessary to reset the elapsed time indicator to zero;

c. the timer shall terminate irradiation when a preselected time has elapsed if the dose-monitoring systems have not previously terminated irradiation; and

d. for new equipment, after termination of irradiation and before irradiation can be reinitiated, it shall be necessary to manually reset the preset time selector.

14. Selection of Radiation Type. Equipment capable of both X-ray therapy and electron therapy shall meet the following additional requirements:

a. irradiation shall not be possible until a selection of radiation type has been made at the treatment control panel;

b. the radiation type selected shall be displayed at the treatment control panel before and during irradiation;

c. an interlock system shall be provided to ensure that the equipment can emit only the radiation type selected;

d. an interlock system shall be provided to prevent irradiation if any selected operations carried out in the treatment room do not agree with the selected operations carried out at the treatment control panel;

e. an interlock system shall be provided to prevent irradiation with X-rays except to obtain a port film when electron applicators are fitted; and

f. an interlock system shall be provided to prevent irradiation with electrons when accessories specific for X-ray therapy are fitted.

15. Selection of Energy. Equipment capable of generating radiation beams of different energies shall meet the following requirements:

a. irradiation shall not be possible until a selection of energy has been made at the treatment control panel;

b. the nominal energy value selected shall be displayed at the treatment control panel before and during irradiation;

c. an interlock system shall be provided to prevent irradiation if any selected operations carried out in the treatment room do not agree with the selected operations carried out at the treatment control panel; and

d. for new equipment, an interlock system shall be provided to terminate irradiation if the energy of the electrons striking the X-ray target or electron window deviates by more than 20 percent or 3 MeV, whichever is smaller, from the selected nominal energy.

16. Selection of Stationary Beam Therapy or Moving Beam Therapy. Equipment capable of both stationary beam therapy and moving beam therapy shall meet the following requirements:

a. irradiation shall not be possible until a selection of stationary beam therapy or moving beam therapy has been made at the treatment control panel;

b. an interlock system shall be provided to ensure that the equipment can operate only in the mode selected;

c. the mode of operation shall be displayed at the treatment control panel;

d. an interlock system shall be provided to prevent irradiation if any selected operations carried out in the treatment room do not agree with the selected operations carried out at the treatment control panel;

e. for new equipment, an interlock system shall be provided to terminate irradiation if:

i. movement of the gantry occurs during stationary beam therapy; or

ii. movement of the gantry stops during moving beam therapy unless such stoppage is a preplanned function;

f. moving beam therapy shall be controlled to obtain the selected relationships between incremental dose monitor units and incremental angle of movement:

i. for new equipment, an interlock system shall be provided to terminate irradiation if the number of dose monitor units delivered in any 10 degrees of arc differs by more than 20 percent from the selected value; and

ii. for new equipment, where gantry angle terminates the irradiation in arc therapy, the dose monitor units shall differ by less than 5 percent from the value calculated from the absorbed dose per unit angle relationship; and

g. where the dose-monitoring system terminates the irradiation in arc therapy, the termination of irradiation shall be as required by LAC 33:XV.609.C.9.

17. Absorbed Dose Rate. For new equipment, a system shall be provided from whose readings the absorbed dose rate at a reference point in the treatment volume can be calculated. The radiation detectors specified may form part of this system. In addition:

a. the dose monitor unit rate shall be displayed at the treatment control panel; and

b. if the equipment can deliver under any conditions an absorbed dose rate at the normal treatment distance more than twice the maximum value specified by the manufacturer for any machine parameters utilized, a device shall be provided that terminates irradiation when the absorbed dose rate exceeds a value twice the specified maximum. The value at which the irradiation will be terminated shall be in a record maintained by the registrant or licensee.

18. Location of Virtual Source and Beam Orientation. The registrant or licensee shall determine, or obtain from the manufacturer, the location with reference to an accessible point on the radiation head of:

a. the X-ray target or the virtual source of X-rays; and

b. the electron window or the virtual source of electrons if the system has electron beam capabilities.

19. System-Checking Facilities. Capabilities shall be provided so that all radiation safety interlocks can be checked for correct operation. When preselection of any of the operating conditions requires action in the treatment room and at the treatment control panel, selection at one location shall not give a display at the other location until the requisite selected operations in both locations have been completed.

D. Facility and Shielding Requirements. In addition to LAC 33:XV.Chapter 4, the following design requirements shall apply.

1. Protective Barriers. All protective barriers shall be fixed except for entrance doors or beam interceptors.

2. Control Panel. The control panel shall be located outside the treatment room.

3. Viewing Systems. Provisions shall be made as follows:

a. windows, mirrors, closed-circuit television, or an equivalent system shall be provided to permit continuous observation of the patient during irradiation and shall be so located that the operator can observe the patient from the control panel; and

b. when the primary viewing system is by electronic means, an alternate viewing system, which may be electronic, shall be available for use in the event of failure of the primary viewing system.

4. Aural Communications. Provision shall be made for two-way aural communication between the patient and the operator at the control panel. However, where excessive noise levels or treatment requirements makes aural communication impractical, other methods of communication shall be used.

5. Room Entrances. Treatment room entrances shall be provided with warning lights in readily observable positions near the outside of all access doors to indicate when the useful beam is "on."

6. Entrance interlocks shall be provided such that all entrance doors must be closed before treatment can be initiated or continued. If the radiation beam is interrupted by any door opening, it shall not be possible to restore the machine to operation without closing the door and reinitiating irradiation by manual action at the control panel.

E. Surveys, Calibrations, Spot Checks, and Operating Procedures

1. Survey requirements are as follows:

a. all new facilities, and existing facilities not previously surveyed, shall have a survey made by, or under the direction of, a qualified expert. In addition, such surveys shall be done after any change in the facility or equipment that might cause a significant increase in radiation hazard;

b. the registrant or licensee shall obtain a written report of the survey from the qualified expert, and a copy of the report shall be transmitted by the registrant or licensee to the Office of Environmental Compliance, Emergency and Radiological Services Division, within 30 days of receipt of the report; and

c. the survey and report shall indicate all instances in which the installation, in the opinion of the qualified expert, is in violation of applicable regulations.

2. Calibrations shall be performed as follows:

a. the calibration of systems subject to this Section shall be performed in accordance with an established calibration protocol acceptable to the department before the system is first used for irradiation of a patient and thereafter at intervals that do not exceed 12 months, and after any change that might significantly alter the calibration, spatial distribution, or other characteristics of the therapy beam. The calibration protocol published by the American Association of Physicists in Medicine is accepted as an established protocol. For other protocols, the user shall submit that protocol to the Office of Environmental Compliance, Emergency and Radiological Services Division, for written concurrence that the protocol is acceptable;

b. the calibration shall be performed under the direct supervision of a radiological physicist who is physically present at the facility during the calibration;

c. calibration radiation measurements required by LAC 33:XV.609.E.2.a shall be performed using a dosimetry system:

i. that has a calibration factor for cobalt-60 gamma rays traceable to a national standard;

ii. that has been calibrated within the previous two years and after any servicing that may have affected its calibration;

iii. that has been calibrated in such a fashion that an uncertainty can be stated for the radiation quantities monitored by the system; and

iv. that has had constancy checks performed on the system as specified by a radiological physicist;

d. calibrations shall be in sufficient detail that the dose at a reference point in soft tissue may be calculated to within an uncertainty of 5 percent;

e. the calibration of the therapy beam shall include but not be limited to the following determinations:

i. verification that the equipment is operating in compliance with the design specifications concerning the light localizer, side light, and back-pointer alignment with the isocenter when applicable; variation in the axis of rotation for the table, gantry, and jaw system; and beam flatness and symmetry at the specified depth;

ii. the absorbed dose rate at various depths of water for the range of field sizes used, for each effective energy, that will verify the accuracy of the dosimetry of all therapy procedures used with that therapy beam;

iii. the uniformity of the radiation field and any dependency upon the direction of the useful beam;

iv. verification that existing depth-dose data and isodose charts applicable to the specific machine continue to be valid or are updated to existing machine conditions; and

v. verification of transmission and electron buildup factors for all accessories such as wedges, shadow trays, and compensators;

f. records of calibration measurements under LAC 33:XV.609.E.2.a and dosimetry system calibrations under LAC 33:XV.609.E.2.c shall be maintained for five years after completion of the full calibration at the facility of use; and

g. a copy of the latest calibration performed pursuant to LAC 33:XV.609.E.2.a shall be available in the area of the control panel.

3. Spot checks shall be performed on systems subject to LAC 33:XV.609 during calibrations and thereafter at intervals not to exceed one month. Such spot checks shall meet the following requirements:

a. the spot-check procedures shall be in writing and shall have been developed by a radiological physicist. A copy of the procedure shall be submitted to the Office of Environmental Compliance, Emergency and Radiological Services Division, prior to its implementation;

b. if a radiological physicist does not perform the spot-check measurements, the results of the spot-check measurements shall be reviewed by a radiological physicist within 15 days;

c. the spot-check procedures shall specify the frequency at which tests or measurements are to be performed and the acceptable tolerance for each parameter measured in the spot check compared to the value for that parameter determined in the calibration;

d. at intervals not to exceed one week, spot checks shall be made of absorbed dose measurements at a minimum of one depth in a phantom;

e. where a system has built-in devices that provide a measurement of any parameter during irradiation, such measurement shall not be utilized as a spot-check measurement;

f. the cause for a parameter exceeding a tolerance set by the radiological physicist shall be investigated and corrected before the system is used for patient irradiation;

g. wherever a spot check indicates a significant change in the operating characteristics of a system, as specified in the radiological physicist's spot-check procedures, the system shall be recalibrated as required in LAC 33:XV.609.E.2;

h. records of spot-check measurements shall be maintained by the registrant or licensee for a period of two years after completion of the spot-check measurements and any necessary corrective actions at the facility of use; and

i. where a spot check involves a radiation measurement, such measurement shall be obtained using a system that satisfies the requirements of LAC 33:XV.609.E.2.c or that has been intercompared with a system meeting those requirements within the previous year.

4. Operating procedures shall include the following:

a. no individual other than the patient shall be in the treatment room during treatment of a patient;

b. if a patient must be held in position during treatment, mechanical supporting or restraining devices shall be used; and

c. the system shall not be used in the administration of radiation therapy unless the requirements of LAC 33:XV.609.E.1, 2, and 3 have been met.

AUTHORITY NOTE: Promulgated in accordance with R.S. 30:2001 et seq.

HISTORICAL NOTE: Promulgated by the Department of Environmental Quality, Nuclear Energy Division, LR 13:569 (October 1987), amended by the Office of Air Quality and Radiation Protection, Radiation Protection Division, LR 19:1421 (November 1993), amended by the Office of Environmental Assessment, Environmental Planning Division, LR 26:2586 (November 2000), amended by the Office of the Secretary, Legal Affairs Division, LR 31:2532 (October 2005).

§610. Computed Tomography X-Ray Systems

A. In addition to the definitions provided in LAC 33:XV.102 and 602, the following definitions shall be applicable to this Section.

Contrast Scale—the change in the linear attenuation coefficient per CTN relative to water, that is:

$$CS = \frac{\mu_x \ \mu_w}{(CTN)_X - (CTN)_w}$$

where:

μ_x = linear attenuation coefficient of the material of interest;

μ_w = linear attenuation coefficient of water;

$(CTN)_x$ = CTN of the material of interest; and

$(CTN)_w$ = CTN of water.

CS—see *Contrast Scale*.

CT Conditions of Operation—all selectable parameters governing the operation of a CT X-ray system including, but not limited to, nominal tomographic section thickness, filtration, and the *technique factors* as defined in LAC 33:XV.602.

CT Gantry—the tube housing assemblies, beam-limiting devices, detectors, and the supporting structures and frames that hold these components.

CTN—see *CT Number*.

CT Number—the number used to represent the X-ray attenuation associated with each elemental area of the CT image.

$$CTN = \frac{k(\mu_x - \mu_w)}{\mu_w}$$

where:

k = A constant. The constant has a normal value of 1,000 when the Houndsfield scale of CTN is used.

μ_x = Linear attenuation coefficient of the material of interest.

μ_w = Linear attenuation coefficient of water.

Dose Profile—the dose as a function of position along a line.

Elemental Area—the smallest area within a tomogram for which the X-ray attenuation properties of a body are depicted. (See also *Picture Element*.)

Multiple Tomogram System—a computed tomography X-ray system that obtains X-ray transmission data simultaneously during a single scan to produce more than 1 tomogram.

Noise—the standard deviation of the fluctuations in CTN expressed as a percentage of the attenuation coefficient of water. Its estimate (S_n) is calculated using the following expression:

$$S_n = \frac{100 \ x \ CS \ x \ s}{\mu_w}$$

where:

CS = contrast scale;

μ_w = linear attenuation coefficient of water; and

s = estimated standard deviation of the CTN of picture elements in a specified area of the CT image.

Nominal Tomographic Section Thickness—the full width at half-maximum of the sensitivity profile taken at the center of the cross-sectional volume over which X-ray transmission data are collected.

Picture Element—an elemental area of a tomogram.

Reference Plane—a plane that is displaced from and parallel to the tomographic plane.

Scan—the complete process of collecting X-ray transmission data for the production of a tomogram. Data can be collected simultaneously during a single scan for the production of one or more tomograms.

Scan Increment—the amount of relative displacement of the patient with respect to the CT X-ray system between successive scans measured along the direction of such displacement.

Scan Sequence—a preselected set of two or more scans performed consecutively under preselected CT conditions of operation.

Scan Time—the period of time between the beginning and end of X-ray transmission data accumulation for a single scan.

Single Tomogram System—a CT X-ray system that obtains X-ray transmission data during a scan to produce a single tomogram.

Tomographic Plane—that geometric plane identified as corresponding to the output tomogram.

Tomographic Section—the volume of an object whose X-ray attenuation properties are imaged in a tomogram.

B. Requirements for Equipment

1. Termination of Exposure. Requirements are as follows:

a. a means shall be provided to terminate the X-ray exposure automatically by either de-energizing the X-ray source or shuttering the X-ray beam in the event of equipment failure affecting data collection. Such termination shall occur within an interval that limits the total scan time to no more than 110 percent of its preset value through the use of either a backup timer or devices that monitor equipment function;

b. a visible signal shall indicate when the X-ray exposure has been terminated through the means required by LAC 33:XV.610.B.1.a; and

c. the operator shall be able to terminate the X-ray exposure at any time during a scan, or series of scans under CT X-ray system control, of greater than 0.5 second duration.

2. Tomographic Plane Indication and Alignment. Requirements are as follows:

a. for any single tomogram system, means shall be provided to permit visual determination of the tomographic plane or a reference plane offset from the tomographic plane;

b. for any multiple tomogram system, a means shall be provided to permit visual determination of the location of a reference plane. This reference plane can be offset from the location of the tomographic planes; and

c. if a device using a light source is used to satisfy LAC 33:XV.610.B.2.a or b, the light source shall provide illumination levels sufficient to permit visual determination of the location of the tomographic plane or reference plane under ambient light conditions of up to 500 lux.

3. Beam On and Shutter Status Indicators and Control Switches. The following requirements shall be met:

a. the CT X-ray control and gantry shall provide visual indication whenever X-rays are produced and, if applicable, whether the shutter is open or closed; and

b. each emergency button or switch shall be clearly labeled as to its function.

4. Indication of CT Conditions of Operation. The CT X-ray system shall be designed such that the CT conditions of operation to be used during a scan or a scan sequence shall be indicated prior to the initiation of a scan or a scan sequence. On equipment having all or some of these conditions of operation at fixed values, this requirement may be met by permanent markings. Indication of CT conditions of operation shall be visible from any position from which scan initiation is possible.

5. Extraneous Radiation. When data are not being collected for image production, the radiation adjacent to the tube port shall not exceed that permitted by LAC 33:XV.604.A.3.

6. Additional requirements applicable to CT X-ray systems containing a gantry manufactured after September 3, 1985, are as follows:

a. the total error in the indicated location of the tomographic plane or reference plane shall not exceed 5 millimeters;

b. if the X-ray production period is less than 0.5 second, the indication of X-ray production shall be actuated for at least 0.5 second. Indicators at or near the gantry shall be discernible from any point external to the patient opening where insertion of any part of the human body into the primary beam is possible;

c. the deviation of indicated scan increment versus actual increment shall not exceed ±1 millimeter with any mass from zero to 100 kilograms resting on the support device. The patient support device shall be incremented from a typical starting position to the maximum incremented distance or 30 centimeters, whichever is less, and then returned to the starting position. Measurement of actual versus indicated scan increment may be taken anywhere along this travel; and

d. premature termination of the X-ray exposure by the operator shall necessitate resetting of the CT conditions of operation prior to the initiation of another scan.

C. Facility Design Requirements

1. Aural Communication. Provision shall be made for two way aural communication between the patient and the operator at the control panel.

2. Viewing Systems. Provisions shall be made as follows:

a. windows, mirrors, closed-circuit television, or an equivalent shall be provided to permit continuous observation of the patient during irradiation and shall be so located that the operator can observe the patient from the control panel; and

b. when the primary viewing system is by electronic means, an alternate viewing system (which may be electronic) shall be available for use in the event of failure of the primary viewing system.

D. Surveys, Calibrations, Spot Checks, and Operating Procedures

1. Survey requirements are as follows:

a. all CT X-ray systems installed after February 20, 1991, and those systems not previously surveyed shall have a survey made by, or under the direction of, a qualified expert. In addition, such surveys shall be done after any change in the facility or equipment that might cause a significant increase in radiation hazard; and

b. the registrant or licensee shall obtain a written report of the survey from the qualified expert, and a copy of the report shall be made available to the department upon request.

2. Radiation calibrations shall be performed as follows:

a. the calibration of the radiation output of the CT X-ray system shall be performed by, or under the direction of, a qualified expert who is physically present at the facility during such calibration;

b. the calibration of a CT X-ray system shall be performed at intervals specified by a qualified expert and after any change or replacement of components that, in the opinion of the qualified expert, could cause a change in the radiation output;

c. the calibration of the radiation output of a CT X-ray system shall be performed with a calibrated dosimetry system. The calibration of such system shall be traceable to a national standard. The dosimetry system shall have been calibrated within the preceding two years at the facility of use;

d. CT dosimetry phantom(s) shall be used in determining the radiation output of a CT X-ray system. Such phantom(s) shall meet the following specifications and conditions of use:

i. CT dosimetry phantom(s) shall be right circular cylinders of polymethyl methacrylate of density 1.19 ±0.01 grams per cubic centimeter. The phantom(s) shall be at least 14 centimeters in length and shall have diameters of 32.0 centimeters for testing CT X-ray systems designed to image any section of the body and 16.0 centimeters for systems designed to image the head or for whole body scanners operated in the head scanning mode;

ii. CT dosimetry phantom(s) shall provide a means for the placement of a dosimeter or dosimeters along the axis of rotation and along a line parallel to the axis of rotation 1.0 centimeter from the outer surface and within the phantom. A means for the placement of dosimeters or alignment devices at other locations may be provided;

iii. any effects on the doses measured due to the removal of phantom material to accommodate dosimeters shall be accounted for through appropriate corrections to the reported data or included in the statement of maximum deviation for the values obtained using the phantom;

iv. all dose measurements shall be performed with the CT dosimetry phantom placed on the patient couch or support device without additional attenuation materials present;

e. the calibration shall be required for each type of head, body, or whole-body scan performed at the facility of use;

f. calibration shall meet the following requirements:

i. the dose profile along the center axis of the CT dosimetry phantom for the minimum, maximum, and midrange values of the nominal tomographic section thickness used by the registrant or licensee shall be measurable. Where less than three nominal tomographic thicknesses can be selected, the dose profile determination shall be performed for each available nominal tomographic section thickness; and

ii. the spot checks specified in LAC 33:XV.610.D.3 shall be made; and

g. calibration procedures shall be in writing. Records of calibrations performed shall be maintained for inspection by the department.

3. Spot checks shall meet the following requirements:

a. the spot-check procedures shall be in writing and shall have been developed by a qualified expert;

b. the spot-check procedures shall incorporate the use of a CT dosimetry phantom that has a capability of providing an indication of contrast scale, noise, nominal tomographic section thickness, and the resolution capability of the system for low and high contrast objects, and for measuring the mean CTN for water or other reference material;

c. all spot checks shall be included in the calibration required by LAC 33:XV.610.D.2 and at time intervals and under system conditions specified by a qualified expert;

d. spot checks shall include acquisition of images obtained with the CT dosimetry phantom(s) using the same processing mode and CT conditions of operation as are used to perform calibrations required by LAC 33:XV.610.D.2. The images shall be retained, until a new calibration is performed, in either of two forms as follows:

i. photographic copies of the images obtained from the image display device; or

ii. images stored in digital form on a storage medium compatible with the CT X-ray system; and

e. written records of the spot checks performed shall be maintained for inspection by the department.

4. Operating procedures shall include the following:

a. the CT X-ray system shall not be operated except by an individual who has been specifically trained in its operation;

b. information shall be available at the control panel regarding the operation and calibration of the system. Such information shall include the following:

i. dates of the latest calibration and spot checks and the location within the facility where the results of those tests may be obtained;

ii. instructions on the use of the CT dosimetry phantom(s) including a schedule of spot checks appropriate for the system, allowable variations for the indicated

parameters, and the results of at least the most recent spot checks conducted on the system;

iii. the distance in millimeters between the tomographic plane and the reference plane if a reference plane is utilized; and

iv. a current technique chart available at the control panel that specifies for each routine examination the CT conditions of operation and the number of scans per examination; and

c. if the calibration or spot check of the CT X-ray system identifies that a system operating parameter has exceeded a tolerance established by the qualified expert, use of the CT X-ray system on patients shall be limited to those uses permitted by established written instructions of the qualified expert.

AUTHORITY NOTE: Promulgated in accordance with R.S. 30:2001 et seq.

HISTORICAL NOTE: Promulgated by the Department of Environmental Quality, Nuclear Energy Division, LR 13:569 (October 1987), amended by the Office of Air Quality and Radiation Protection, Radiation Protection Division, LR 19:1421 (November 1993), amended by the Office of Environmental Assessment, Environmental Planning Division, LR 26:2586 (November 2000).

§613. Notifications, Reports, and Records of Medical Events

A. A registrant shall report any medical event, except for an event that results from patient intervention, in which the administration of radiation involves the wrong patient, a procedure different than that which was authorized by the licensed practitioner of the healing arts, or a body site different from that which was authorized and intended to be exposed by the authorized X-ray procedure.

B. A registrant shall report any event resulting from intervention of a patient or human research subject in which the administration of radiation results or will result in unintended permanent functional damage to an organ or a physiological system, as determined by a physician.

C. All reports, notifications, and records shall be in accordance with LAC 33:XV.712.C, D, and F.

D. Aside from the notification requirement, nothing in this Section affects any rights or duties of registrants and physicians in relation to each other, the individual, or the individual's responsible relatives or guardians.

AUTHORITY NOTE: Promulgated in accordance with R.S. 30:2104 et seq.

HISTORICAL NOTE: Promulgated by the Department of Environmental Quality, Office of Environmental Assessment, LR 31:1064 (May 2005).

§615. Report and Notification of a Dose to an Embryo/Fetus

A. A registrant shall report any dose to an embryo/fetus in excess of 50 mSv (5 rem) dose equivalent that is a result of a diagnostic X-ray procedure, in accordance with LAC 33:XV.710.A and C-F.

AUTHORITY NOTE: Promulgated in accordance with R.S. 30:2104 et seq.

HISTORICAL NOTE: Promulgated by the Department of Environmental Quality, Office of Environmental Assessment, LR 31:1065 (May 2005).

§699. Appendices A, B, and C

Appendix A
Information on Radiation Shielding Required for Plan Reviews

In order for the department to provide an evaluation, technical advice, and official approval of shielding requirements for a radiation installation, the following information shall be submitted.

A. The plans should show, as a minimum, the following.

1. The normal location of the X-ray system's radiation producing equipment's radiation port, the port's travel and traverse limits, general direction(s) of the useful beam, locations of any windows and doors, the location of the operator's booth, and the location of the X-ray control panel.

2. The structural composition and thickness or lead equivalent of all walls, doors, partitions, floor, and ceiling of the room(s) concerned.

3. The dimensions of the room(s) concerned.

4. The type of occupancy of all adjacent areas inclusive of space above and below the room(s) concerned. If there is an exterior wall, show distance to the closest area(s) where it is likely that individuals may be present.

5. The make and model of the X-ray equipment and the maximum technique factors.

6. The type of examination(s) or treatment(s) that will be performed with the equipment.

B. Information on the anticipated workload of the X-ray system(s) shall be submitted with the plans.

C. If the services of a qualified expert have been utilized to determine the shielding requirements, a report, including all basic assumptions used, shall be submitted with the plans.

Appendix B
Design Requirements for an Operator's Booth

A. Space Requirements. The operator shall be allotted not less than 7.5 square feet (0.697 m^2) of unobstructed floor space in the booth.

1. The operator's booth may be any geometric configuration with no dimension of less than 2 feet (0.61 m).

2. The space shall be allotted excluding any encumbrance by the X-ray control panel, such as overhang, cables, or other similar encroachments.

3. The booth shall be located or constructed such that unattenuated direct scatter radiation originating on the examination table or at the wall cassette does not reach the operator's station in the booth.

B. Structural Requirements. The booth walls shall be permanently fixed barriers of at least 7 feet (2.13 m) high.

1. When a door or movable panel is used as an integral part of the booth structure, it must have an interlock that will prevent an exposure when the door or panel is not closed.

2. Shielding shall be provided to meet the requirements of LAC 33:XV.Chapter 4.

C. X-Ray Control Placement. The X-ray control for the system shall be fixed within the booth and:

1. shall be at least 40 inches (1.02 m) from any open edge of the booth wall that is nearest to the examining table; and

2. shall allow the operator to use the majority of the available viewing windows.

D. Viewing System Requirements

1. Each booth shall have at least one viewing device that will be so placed that:

a. the operator can view the patient during any exposure; and

b. the operator can have full view of any occupant of the room, and the operator can view any entry into the room. If any door that allows access to the room cannot be seen from the booth, then that door must have an interlock controlling the exposure that will prevent the exposure if the door is not closed.

2. When the viewing system is a window, the following requirements also apply:

a. the viewing area shall be at least 1 square foot (0.0929 m^2);

b. the design of the booth shall be such that the operator's expected position when viewing the patient and operating the X-ray system is at least 18 inches (0.457 meter) from the edge of the booth; and

c. the material constituting the window shall have the same lead equivalence as that required in the booth's wall in which it is mounted.

3. When the viewing system is by mirrors, the mirror(s) shall be so located as to accomplish the general requirements in Paragraph C.1 of this Appendix.

4. When the viewing system is by electronic means:

a. the camera shall be so located as to accomplish the general requirements of Paragraph C.1 of this Appendix; and

b. there shall be an alternate viewing system as a backup for the primary system.

Appendix C
Information to be Submitted by Persons Proposing to Conduct Healing Arts Screening

Persons requesting that the department approve a healing arts screening program shall submit the following information and evaluation:

A. Name and address of the applicant and, where applicable, the names and addresses of agents within Louisiana.

B. Diseases or conditions for which the X-ray examinations are to be used in diagnoses.

C. A detailed description of the X-ray examinations proposed in the screening program.

D. Description of the population to be examined in the screening program, i.e., age, sex, physical condition, and other appropriate information.

E. An evaluation of any known alternate methods not involving ionizing radiation that could achieve the goals of the screening program and why these methods are not used instead of the X-ray examinations.

F. An evaluation by a qualified expert of the X-ray system(s) to be used in the screening program. The evaluation by the qualified expert shall show that such system(s) do satisfy all requirements of LAC 33:XV.

G. A description of the diagnostic film quality control program.

H. A copy of the technique chart for the X-ray examination procedures to be used.

I. The qualifications of each individual who will be operating the X-ray system(s).

J. The qualifications of each individual who will be supervising the operator(s) of the X-ray system(s). The extent of supervision and the method of work performance evaluation shall be specified.

K. The name and address of the individual who will interpret the radiograph(s).

L. A description of the procedures to be used in advising the individuals screened and their private practitioners of the healing arts, the results of the screening procedure and any further medical needs indicated.

M. A description of the procedures for the retention or disposition of the radiograph(s) and other records pertaining to the X-ray examination(s).

N. The name and address of the responsible party and service agent in the event legal charges or allegations arise as a result of the X-ray screening.

O. In the event the applicant is a foreign corporation, documents shall be submitted to demonstrate that the applicant has complied with Louisiana laws regarding domestication of that corporation.

P. Any other information requested by the department that may be necessary to evaluate the justification or possible effects of an X-ray screening proposal.

AUTHORITY NOTE: Promulgated in accordance with R.S. 30:2001 et seq.

HISTORICAL NOTE: Promulgated by the Department of Environmental Quality, Nuclear Energy Division, LR 13:569 (October 1987), amended by the Office of Air Quality and Radiation Protection, Radiation Protection Division, LR 19:1421 (November 1993), amended by the Office of Environmental Assessment, Environmental Planning Division, LR 26:2586 (November 2000).

Chapter 7. Use of Radionuclides in the Healing Arts

§701. Purpose and Scope

A. This Chapter establishes requirements and provisions for the use of radionuclides in the healing arts and for issuance of licenses authorizing the medical use of this material. These requirements and provisions provide for the protection of the public health and safety. The requirements and provisions of this Chapter are in addition to, and not in substitution for, other applicable provisions of LAC 33:XV.Chapters 1, 3, 4, and 10. The requirements and provisions of these regulations apply to applicants and licensees subject to this Chapter unless specifically exempted. The definitions of some terms used in this Chapter may be found in LAC 33:XV.Chapters 1 and 6. Nothing in this Chapter relieves the licensee from complying with applicable FDA, other federal, and state requirements governing radioactive drugs or devices.

AUTHORITY NOTE: Promulgated in accordance with R.S. 30:2001 et seq.

HISTORICAL NOTE: Promulgated by the Department of Environmental Quality, Nuclear Energy Division, LR 13:569 (October 1987), amended by the Office of Air Quality and Radiation Protection, Radiation Protection Division, LR 18:34 (January 1992), LR 24:2101 (November 1998).

§702. License Required and Exemptions

A. No person shall manufacture, produce, acquire, receive, possess, use, or transfer radioactive material for medical use except in accordance with a specific license issued by the department, the Nuclear Regulatory Commission, or an agreement state or as allowed in Subsections B and C of this Section.

B. Unless prohibited by license condition, an individual may receive, possess, use, or transfer radioactive material in accordance with the regulations in this Chapter under the supervision of an authorized user as provided in LAC 33:XV.709.

C. An individual may prepare unsealed radioactive material for medical use in accordance with the regulations in this Chapter under the supervision of an authorized nuclear pharmacist or authorized user, as provided in LAC 33:XV.709, unless prohibited by license condition.

D. Exemptions Regarding Specific Licenses of Broad Scope. A licensee possessing a specific license of broad scope for medical use is exempt from the following:

1. the provisions of LAC 33:XV.703.A.2;

2. the provisions of LAC 33:XV.703.A.5 regarding additions to or changes in the areas of use only at the addresses specified in the license;

3. the provisions of LAC 33:XV.704.A; and

4. the provisions of LAC 33:XV.704.B.1 for an authorized user or an authorized nuclear pharmacist.

AUTHORITY NOTE: Promulgated in accordance with R.S. 30:2001 et seq.

HISTORICAL NOTE: Promulgated by the Department of Environmental Quality, Nuclear Energy Division, LR 13:569 (October 1987), amended by the Office of Air Quality and Radiation Protection, Radiation Protection Division, LR 18:34 (January 1992), LR 24:2101 (November 1998), amended by the Office of Environmental Assessment, Environmental Planning Division, LR 26:2587 (November 2000).

§703. License Amendments and Provisions for Research Involving Human Subjects

A. A licensee shall apply for and receive a license amendment:

1. before using radioactive material for a method or type of medical use not permitted by the license issued under this Chapter;

2. before permitting anyone to work as an authorized user, authorized medical physicist, or authorized nuclear pharmacist under the license, except an individual who is:

a. an authorized user certified by the organizations specified in LAC 33:XV.763.C.1, D.1, E.1, F.1, H.1, or I.1;

b. an authorized nuclear pharmacist certified by the organization specified in LAC 33:XV.763.K.1;

c. identified as an authorized user, an authorized medical physicist, or an authorized nuclear pharmacist on a department, Nuclear Regulatory Commission, licensing state, or agreement state license that authorizes the use of radioactive material in medical use or in the practice of nuclear pharmacy, respectively; or

d. identified as an authorized user, an authorized medical physicist, or an authorized nuclear pharmacist on a permit issued by a department, Nuclear Regulatory Commission, licensing state, or agreement state specific licensee of broad scope that is authorized to permit the use of radioactive material in medical use or in the practice of nuclear pharmacy, respectively;

3. before changing a radiation safety officer, authorized medical physicist, or teletherapy physicist;

4. before receiving radioactive material in excess of the amount authorized on the license;

5. before adding to or changing the areas of use or address or addresses of use identified in the application or on the license; and

6. before changing statements, representations, and procedures incorporated into the license.

B. A licensee may conduct research involving human subjects using radioactive material, provided that the research is conducted, funded, supported, or regulated by a federal agency that has implemented the Federal Policy for the Protection of Human Subjects. The licensee shall, before conducting such research:

1. obtain review and approval of the research from an *Institutional Review Board*, as defined and described in the Federal Policy; and

2. obtain *informed consent*, as defined and described in the Federal Policy, from the human research subject.

C. If the research will not be conducted, funded, supported, or regulated by a federal agency that has implemented the Federal Policy for the Protection of Human Subjects, the licensee shall, before conducting research, apply for and receive a specific amendment to its U.S. Nuclear Regulatory Commission medical use license. The amendment request must include a written commitment that the licensee will, before conducting research:

1. obtain review and approval of the research from an *Institutional Review Board*, as defined and described in the Federal Policy; and

2. obtain *informed consent*, as defined and described in the Federal Policy, from the human research subject.

D. Nothing in this Section relieves licensees from complying with the other requirements in this Chapter.

AUTHORITY NOTE: Promulgated in accordance with R.S. 30:2001 et seq.

HISTORICAL NOTE: Promulgated by the Department of Environmental Quality, Nuclear Energy Division, LR 13:569 (October 1987), amended by the Office of Air Quality and Radiation Protection, Radiation Protection Division, LR 18:34 (January 1992), LR 24:2101 (November 1998), amended by the Office of Environmental Assessment, Environmental Planning Division, LR 26:2587 (November 2000), LR 30:1173 (June 2004), amended by the Office of Environmental Assessment, LR 31:1061 (May 2005), amended by the Office of the Secretary, Legal Affairs Division, LR 32:812 (May 2006).

§704. Notifications

A. A licensee shall provide to the Office of Environmental Compliance, Emergency and Radiological Services Division, a copy of the board certification, the Nuclear Regulatory Commission or agreement state license, or the permit issued by a licensee of broad scope for each individual no later than 30 days after the date that the licensee permits the individual to work as an authorized user, an authorized nuclear pharmacist, or an authorized medical physicist in accordance with LAC 33:XV.703.A.2.

B. A licensee shall notify the Office of Environmental Compliance, Emergency and Radiological Services Division, by letter no later than 30 days after:

1. an authorized user, an authorized nuclear pharmacist, a radiation safety officer, or an authorized medical physicist permanently discontinues performance of duties under the license or has a name change; or

2. the licensee's mailing address changes.

AUTHORITY NOTE: Promulgated in accordance with R.S. 30:2001 et seq.

HISTORICAL NOTE: Promulgated by the Department of Environmental Quality, Office of Air Quality and Radiation Protection, Radiation Protection Division, LR 18:34 (January 1992), amended LR 24:2101 (November 1998), amended by the Office of Environmental Assessment, Environmental Planning Division, LR 26:2587 (November 2000), LR 30:1173 (June 2004), amended by the Office of Environmental Assessment, LR 31:1061 (May 2005), amended by the Office of the Secretary, Legal Affairs Division, LR 31:2532 (October 2005).

§705. ALARA Program

A. Each licensee shall develop and implement a written program to maintain radiation doses and releases of radioactive material in effluents to unrestricted areas as low as reasonably achievable in accordance with LAC 33:XV.401.B.

B. To satisfy the requirement of LAC 33:XV.705.A:

1. the management, radiation safety officer, and all authorized users shall participate in the establishment, implementation, and operation of the program as required by these regulations or the radiation safety committee; or

2. for licensees that are not medical institutions, management and all authorized users shall participate in the program as required by the radiation safety officer.

C. The ALARA program shall include an annual review by the radiation safety committee for licensees that are medical institutions, or by management and the radiation safety officer for licensees that are not medical institutions, of summaries of the types and amounts of radioactive material used, occupational dose reports, and continuing education and training for all personnel who work with or in the vicinity of radioactive material. The purpose of the review is to ensure that individuals make every reasonable effort to maintain occupational doses, doses to the general public, and releases of radioactive material as low as reasonably achievable, taking into account the state of technology and the cost of improvements in relation to benefits.

D. The licensee shall retain a current written description of the ALARA program for the duration of the license. The written description shall include:

1. a commitment by management to keep occupational doses as low as reasonably achievable;

2. a requirement that the radiation safety officer brief management once each year on the radiation safety program;

3. personnel exposure investigational levels as established in accordance with LAC 33:XV.707.A.2.h that, when exceeded, will initiate an investigation by the radiation safety officer of the cause of the exposure; and

4. personnel exposure investigational levels that, when exceeded, will initiate a prompt investigation by the radiation safety officer of the cause of the exposure and a consideration of actions that might be taken to reduce or eliminate the probability of recurrence.

AUTHORITY NOTE: Promulgated in accordance with R.S. 30:2001 et seq.

HISTORICAL NOTE: Promulgated by the Department of Environmental Quality, Office of Air Quality and Radiation Protection, Radiation Protection Division, LR 18:34 (January 1992).

§706. Radiation Safety Officer

A. A licensee shall appoint a radiation safety officer, who agrees, in writing, to be responsible for implementing the radiation safety program. The licensee, through the radiation safety officer, shall ensure that radiation safety activities are being performed in accordance with approved procedures and regulatory requirements in the daily operation of the licensee's radioactive material program.

B. The radiation safety officer shall do the following.

1. Investigate overexposures, accidents, spills, losses, thefts, unauthorized receipts, uses, transfers, and disposals, and other deviations from approved radiation safety practice and implement appropriate corrective actions as necessary.

2. Implement written policy and procedures for:

a. authorizing the purchase of radioactive material;

b. receiving and opening packages of radioactive material;

c. storing radioactive material;

d. keeping an inventory record of radioactive material;

e. using radioactive material safely;

f. taking emergency action if control of radioactive material is lost;

g. performing periodic radiation surveys;

h. performing checks and calibrations of survey instruments and other safety equipment;

i. disposing of radioactive material;

j. training personnel who work in or frequent areas where radioactive material is used or stored; and

k. keeping a copy of all records and reports required by the department regulations (LAC 33:XV), a copy of these regulations, a copy of each licensing request and license and amendments, and the written policy and procedures required by these regulations.

3. For medical use not sited at a medical institution, approve or disapprove radiation safety program changes

with the advice and consent of management prior to submittal to the department for licensing action.

4. For medical use sited at a medical institution, assist the radiation safety committee in the performance of its duties.

AUTHORITY NOTE: Promulgated in accordance with R.S. 30:2001 et seq.

HISTORICAL NOTE: Promulgated by the Department of Environmental Quality, Office of Air Quality and Radiation Protection, Radiation Protection Division, LR 18:34 (January 1992), amended by the Office of Environmental Assessment, Environmental Planning Division, LR 26:2588 (November 2000), amended by the Office of the Secretary, Legal Affairs Division, LR 32:813 (May 2006).

§707. Radiation Safety Committee

A. Each medical institution licensee shall establish a radiation safety committee to oversee the use of radioactive material.

1. The committee shall meet the following administrative requirements.

a. Membership must consist of at least three individuals and shall include an authorized user of each type of use permitted by the license, the radiation safety officer, a representative of the nursing service, and a representative of management who is neither an authorized user nor a radiation safety officer. Other members may be included as the licensee deems appropriate.

b. The committee shall meet at least once each calendar quarter.

c. To establish a quorum and to conduct business, one-half of the committee's membership shall be present, including the radiation safety officer and the management's representative.

d. The minutes of each radiation safety committee meeting shall include:

i. the date of the meeting;

ii. members present;

iii. members absent;

iv. summary of deliberations and discussions;

v. recommended actions and the numerical results of all ballots; and

vi. documentation of any reviews required in LAC 33:XV.705.C and 707.A.1.b.

e. The committee shall provide each member with a copy of the meeting minutes and retain one copy until the department authorizes its disposition.

2. To oversee the use of licensed material, the committee shall:

a. be responsible for monitoring the institutional program to maintain occupational doses as low as reasonably achievable;

b.i. review, on the basis of safety and with regard to the training and experience standards of this Chapter, and approve or disapprove any individual who is to be listed as an authorized user, an authorized nuclear pharmacist, the radiation safety officer, or a teletherapy physicist before submitting a license application or request for amendment or renewal; and

ii. review, in accordance with LAC 33:XV.703.A.2, on the basis of the board certification, the license, or the permit identifying an individual, and approve or disapprove any individual prior to allowing that individual to work as an authorized user or authorized nuclear pharmacist;

c. review on the basis of safety and approve or disapprove each proposed method of use of radioactive material;

d. review on the basis of safety, and approve with the advice and consent of the radiation safety officer and the management representative, or disapprove, procedures and radiation safety program changes prior to submittal to the department for licensing action;

e. review quarterly, with the assistance of the radiation safety officer, occupational radiation exposure records of all personnel working with radioactive material;

f. review quarterly, with the assistance of the radiation safety officer, all incidents involving radioactive material with respect to cause and subsequent actions taken;

g. review annually, with the assistance of the radiation safety officer, the radioactive material program; and

h. establish a table of investigational levels for occupational dose that, when exceeded, will initiate investigations and considerations of appropriate action by the radiation safety officer.

AUTHORITY NOTE: Promulgated in accordance with R.S. 30:2001 et seq.

HISTORICAL NOTE: Promulgated by the Department of Environmental Quality, Office of Air Quality and Radiation Protection, Radiation Protection Division, LR 18:34 (January 1992), amended LR 24:2102 (November 1998), amended by the Office of Environmental Assessment, Environmental Planning Division, LR 26:2588 (November 2000).

§708. Statement of Authorities and Responsibilities

A. A licensee shall provide sufficient authority and organizational freedom to the radiation safety officer and the radiation safety committee to:

1. identify radiation safety problems;

2. initiate, recommend, or provide solutions; and

3. verify implementation of corrective actions.

B. A licensee shall establish in writing the authorities, duties, responsibilities, and radiation safety activities of the radiation safety officer and the radiation safety committee, and furnish same to each.

AUTHORITY NOTE: Promulgated in accordance with R.S. 30:2001 et seq.

HISTORICAL NOTE: Promulgated by the Department of Environmental Quality, Office of Air Quality and Radiation Protection, Radiation Protection Division, LR 18:34 (January 1992).

§709. Supervision

A. A licensee who permits the receipt, possession, use, or transfer of radioactive material by an individual under the supervision of an authorized user as allowed by LAC 33:XV.702 shall:

1. instruct the supervised individual in the principles of radiation safety appropriate to that individual's use of radioactive material;

2. require the supervised individual to follow the instructions of the supervising authorized user, written radiation protection procedures established by the licensee, written directive procedures, regulations of this Chapter, and license conditions with respect to the medical use of radioactive material;

3. review the supervised individual's use of radioactive material, provide reinstruction as needed, and review records kept to reflect this use;

4. require the authorized user to be immediately available to communicate with the supervised individual;

5. require the authorized user to be able to be physically present and available to the supervised individual on one hour's notice (The supervising authorized user need not be present for each use of radioactive material.); and

6. require that only those individuals specifically trained, and designated by the authorized user, shall be permitted to administer radionuclides or radiation to patients.

B. A license shall require the supervised individual receiving, possessing, using, or transferring radioactive material under LAC 33:XV.702 to:

1. follow the instructions of the supervising authorized user;

2. follow the procedures established by the radiation safety officer; and

3. comply with these regulations and the license conditions with respect to the use of radioactive material.

C. A licensee that permits the preparation of byproduct material for medical use by an individual under the supervision of an authorized nuclear pharmacist or physician who is an authorized user, as allowed by LAC 33:XV.702, shall:

1. instruct the supervised individual in the preparation of byproduct material for medical use and the principles of and procedures for radiation safety and in the licensee's written quality management program, as appropriate to that individual's use of byproduct material;

2. require the supervised individual to follow the instructions given in accordance with Paragraph C.1 of this Section and to comply with the regulations of this Chapter and license conditions; and

3. require the supervising authorized nuclear pharmacist or physician who is an authorized user to periodically review the work of the supervised individual as it pertains to preparing byproduct material for medical use and the records kept to reflect that work.

D. A licensee that supervises an individual is responsible for the acts and omissions of the supervised individual.

AUTHORITY NOTE: Promulgated in accordance with R.S. 30:2001 et seq.

HISTORICAL NOTE: Promulgated by the Department of Environmental Quality, Office of Air Quality and Radiation Protection, Radiation Protection Division, LR 18:34 (January 1992), amended LR 24:2102 (November 1998), amended by the Office of Environmental Assessment, Environmental Planning Division, LR 30:1173 (June 2004).

§710. Report and Notification of a Dose to an Embryo/Fetus or a Nursing Child

A. A licensee shall report any dose to an embryo/fetus that is greater than 50 mSv (5 rem) dose equivalent that is a result of an administration of radioactive material to a pregnant individual unless the dose to the embryo/fetus was specifically approved, in advance, by the authorized user.

B. A licensee shall report any dose to a nursing child that is a result of an administration of radioactive material to a breast-feeding individual that:

1. is greater than 50 mSv (5 rem) total effective dose equivalent; or

2. has resulted in unintended permanent functional damage to an organ or a physiological system of the child, as determined by a physician.

C. The licensee shall notify the Office of Environmental Compliance in the manner provided in LAC 33:I.3923 no later than the next calendar day after discovery of a dose to the embryo/fetus or nursing child that requires a report in accordance with Subsection A or B of this Section.

D. The licensee shall submit a written report to the Office of Environmental Compliance in the manner provided in LAC 33:I.3925 within 15 days after discovery of a dose to the embryo/fetus or nursing child that requires a report in accordance with Subsection A or B of this Section.

1. The written report shall include:

a. the licensee's name;

b. the name of the prescribing physician;

c. a brief description of the event;

d. why the event occurred;

e. the effect, if any, on the embryo/fetus or the nursing child;

f. what actions, if any, have been taken or are planned to be taken to prevent recurrence; and

g. certification that the licensee notified the pregnant individual or mother (or the mother's or child's responsible relative or guardian) in accordance with Subsection E of this Section and, if not, why not.

2. The report shall not contain the individual's or child's name or any other information that could lead to identification of the individual or child.

E. The licensee shall provide notification of the event to the referring physician and also notify the pregnant individual or mother, both hereafter referred to as "the mother," no later than 24 hours after discovery of an event that would require reporting in accordance with Subsection A or B of this Section, unless the referring physician personally informs the licensee either that he or she will inform the mother or that, based on medical judgment, telling the mother would be harmful. The licensee is not required to notify the mother without first consulting with the referring physician. If the referring physician or mother cannot be reached within 24 hours, the licensee shall make the appropriate notifications as soon as possible thereafter. The licensee may not delay any appropriate medical care for the embryo/fetus or for the nursing child, including any necessary remedial care as a result of the event, because of any delay in notification. To meet the requirements of this Subsection, the notification may be made to the mother's or child's responsible relative or guardian instead of to the mother. If a verbal notification is made, the licensee shall inform the mother, or the mother's or child's responsible relative or guardian, that a written description of the event can be obtained from the licensee upon request. The licensee shall provide such a written description if requested.

F. A licensee shall:

1. annotate a copy of the report provided to the Office of Environmental Compliance, SPOC with:

a. the name of the pregnant individual or the nursing child who is the subject of the event; and

b. the social security number or other identification number, if one has been assigned, of the pregnant individual or the nursing child who is the subject of the event; and

2. provide a copy of the annotated report to the referring physician, if other than the licensee, no later than 15 days after the discovery of the event.

AUTHORITY NOTE: Promulgated in accordance with R.S. 30:2001 et seq.

HISTORICAL NOTE: Promulgated by the Department of Environmental Quality, Office of Environmental Assessment, Environmental Planning Division, LR 30:1174 (June 2004).

§711. Mobile Nuclear Medicine Service Administrative Requirements

A. The department will only license mobile nuclear medicine services in accordance with this Chapter and other applicable requirements of these regulations to serve clients who do not have a department license.

B. Mobile nuclear medicine service licensees shall retain for the duration of service a letter signed by the management of each location where services are rendered that authorizes use of radioactive material.

C. A mobile nuclear medicine service shall not have radioactive material delivered directly from the manufacturer or the distributor to the client's address of use.

AUTHORITY NOTE: Promulgated in accordance with R.S. 30:2001 et seq.

HISTORICAL NOTE: Promulgated by the Department of Environmental Quality, Office of Air Quality and Radiation Protection, Radiation Protection Division, LR 18:34 (January 1992), amended by the Office of Environmental Assessment, Environmental Planning Division, LR 26:2588 (November 2000).

§712. Notifications, Reports, and Records of Medical Events

A. A licensee shall report any medical event, except for an event that results from patient intervention, in which the administration of radioactive material or radiation from radioactive material results in:

1. a dose that differs from the prescribed dose, or the dose that would have resulted from the prescribed dosage, by more than 0.05 Sv (5 rem) effective dose equivalent, (0.5 Sv (50 rem) to an organ or tissue), or 0.5 Sv (50 rem) shallow dose equivalent to the skin, where:

a. the total dose delivered differs from the prescribed dose by 20 percent or more;

b. the total dosage delivered differs from the prescribed dosage by 20 percent or more or falls outside the prescribed dosage range; or

c. the fractionated dose delivered differs from the prescribed dose, for a single fraction, by 50 percent or more;

2. a dose that exceeds 0.05 Sv (5 rem) effective dose equivalent, 0.5 Sv (50 rem) to an organ or tissue, or 0.5 Sv (50 rem) shallow dose equivalent to the skin from any of the following:

a. an administration of a wrong radioactive drug;

b. an administration of a radioactive drug by the wrong route of administration;

c. an administration of a dose or dosage to the wrong individual or human research subject;

d. an administration of a dose or dosage delivered by the wrong mode of treatment; or

e. a leaking sealed source; or

3. a dose to the skin or an organ or tissue other than the treatment site that exceeds 0.5 Sv (50 rem) to an organ or tissue and 50 percent or more of the dose expected from the administration defined in the written directive (excluding, for permanent implants, seeds that were implanted in the correct site but migrated outside the treatment site).

B. A licensee shall report any event resulting from intervention of a patient or human research subject in which

the administration of radioactive material results or will result in unintended permanent functional damage to an organ or a physiological system, as determined by a physician.

C. The following notifications are required for a medical event.

1. The licensee shall notify the Office of Environmental Compliance by telephone at (225) 765-0160 in the manner provided in LAC 33:I.3923 no later than the next calendar day after discovery of the medical event.

2. The licensee shall submit a written report to the Office of Environmental Compliance using the procedures provided in LAC 33:I.3925.B and C within 15 days after discovery of the medical event. The written report shall include the licensee's name; the prescribing physician's name; a brief description of the event; why the event occurred; the effect on the individual who received the administration; what improvements are needed to prevent recurrence; actions taken to prevent recurrence; whether the licensee notified the individual, or the individual's responsible relative or guardian, and if not, why not, and if the individual was notified, what information was provided to the individual. The report shall not include the individual's name or other information that could lead to identification of the individual. To meet the requirements of this Section, the notification of the medical event may be made to the individual or instead to that individual's responsible relative or guardian, when appropriate.

3. The licensee shall notify the referring physician and also notify the individual who is the subject of the medical event no later than 24 hours after its discovery, unless the referring physician personally informs the licensee either that he will inform the individual or that, based on medical judgement, telling the individual would be harmful. The licensee is not required to notify the individual without first consulting the referring physician. If the referring physician or the affected individual cannot be reached within 24 hours, the licensee shall notify the individual as soon as possible thereafter. The licensee may not delay any appropriate medical care for the individual, including any necessary remedial care as a result of the medical event, because of any delay in notification. To meet the requirements of this Paragraph, the notification to the individual who is the subject of the medical event may be made instead to that individual's responsible relative or guardian. If a verbal notification is made, the licensee shall inform the individual, or appropriate responsible relative or guardian, that a written description of the event can be obtained from the licensee upon request. The licensee shall provide such a written description if requested.

4. If the individual was notified, the licensee shall also furnish, within 15 days after discovery of the medical event, a written report to the individual by sending either:

a. a copy of the report that was submitted to the department; or

b. a brief description of both the event and the consequences as they may affect the individual, provided a statement is included that the report submitted to the department can be obtained from the licensee.

D. Each licensee shall retain a record of each medical event for five years. The record shall contain the names of all individuals involved (including the prescribing physician, allied health personnel, the individual affected by the medical event, and the individual's referring physician), the individual's driver's license or state identification number and the issuing state, a brief description of the medical event, why it occurred, the effect on the individual, what improvements are needed to prevent recurrence, and the actions taken to prevent recurrence.

E. Aside from the notification requirement, nothing in this Section affects any rights or duties of licensees and physicians in relation to each other, the individual, or the individual's responsible relatives or guardians.

F. A licensee shall:

1. annotate a copy of the report provided to the department with:

a. the name of the individual who is the subject of the event; and

b. the social security number or other identification number, if one has been assigned, of the individual who is the subject of the event; and

2. provide a copy of the annotated report to the referring physician, if other than the licensee, no later than 15 days after the discovery of the event.

AUTHORITY NOTE: Promulgated in accordance with R.S. 30:2001 et seq.

HISTORICAL NOTE: Promulgated by the Department of Environmental Quality, Office of Air Quality and Radiation Protection, Radiation Protection Division, LR 18:34 (January 1992), amended LR 24:2102 (November 1998), amended by the Office of Environmental Assessment, Environmental Planning Division, LR 26:2588 (November 2000), LR 30:1174 (June 2004), LR 30:1679 (August 2004), amended by the Office of Environmental Assessment, LR 30:2804 (December 2004).

§713. Suppliers

A. A licensee shall use for medical use only:

1. radioactive material, including sealed sources or devices, manufactured, labeled, packaged, and distributed in accordance with a license issued in accordance with these regulations or the equivalent regulations of another agreement state, a licensing state, or the Nuclear Regulatory Commission;

2. reagent kits that have been manufactured, labeled, packaged, and distributed in accordance with an approval issued by the U.S. Food and Drug Administration; and

3. teletherapy sources manufactured and distributed in accordance with a license issued pursuant to these regulations or the equivalent regulations of another

agreement state, a licensing state, or the U.S. Nuclear Regulatory Commission.

AUTHORITY NOTE: Promulgated in accordance with R.S. 30:2001 et seq.

HISTORICAL NOTE: Promulgated by the Department of Environmental Quality, Office of Air Quality and Radiation Protection, Radiation Protection Division, LR 18:34 (January 1992), amended LR 24:2103 (November 1998).

§714. Quality Control of Imaging Equipment

A. Each licensee shall establish written quality control procedures for all equipment used to obtain images from radionuclide studies. As a minimum, the procedures shall include quality control procedures recommended by equipment manufacturers or procedures that have been approved by the department. The licensee shall conduct quality control procedures in accordance with written procedures.

AUTHORITY NOTE: Promulgated in accordance with R.S. 30:2001 et seq.

HISTORICAL NOTE: Promulgated by the Department of Environmental Quality, Office of Air Quality and Radiation Protection, Radiation Protection Division, LR 18:34 (January 1992), amended by the Office of Environmental Assessment, Environmental Planning Division, LR 26:2588 (November 2000).

§715. Possession, Use, Calibration, and Checking of Dose Calibrators and of Instruments to Measure Dosages of Alpha-Emitting or Beta-Emitting Radionuclides

A. For direct measurements performed in accordance with LAC 33:XV.717, a licensee shall possess and use instrumentation to measure the activity of unsealed radioactive material before it is administered to each patient or human research subject.

B. A licensee shall do the following.

1. Check each dose calibrator for constancy with a dedicated check source at the beginning of each day of use. To satisfy the requirements of this Section, the check shall be done on a frequently used setting with a sealed source of not less than 10 microcuries (370 kBq) of radium-226 or 50 microcuries (1.85 MBq) of any other photon-emitting radionuclide with a half-life greater than 90 days.

2. Test each dose calibrator for accuracy upon installation and at intervals not to exceed 12 months thereafter by assaying at least two sealed sources containing different radionuclides, the activity of which the manufacturer has determined within 5 percent of the stated activity, with minimum activity of 10 microcuries (370 kBq) for radium-226 and 50 microcuries (1.85 MBq) for any other photon-emitting radionuclide, and at least one of which has a principal photon energy between 100 keV and 500 keV.

3. Test each dose calibrator for linearity upon installation and at intervals not to exceed three months thereafter over the range of use between 10 microcuries (370 kBq) and the highest dosage that will be administered.

4. Test each dose calibrator for geometry dependence upon installation over the range of volumes and volume configurations for which it will be used. The licensee shall keep a record of this test for the duration of the use of the dose calibrator.

C. A licensee shall mathematically correct dosage readings for any geometry or linearity error that exceeds 10 percent if the dosage is greater than 10 microcuries (370 kBq) and shall repair or replace the dose calibrator if the accuracy or constancy error exceeds 10 percent.

D. A licensee shall also perform checks and tests required by Subsection B of this Section following adjustment or repair of the dose calibrator.

E. A licensee shall retain a record of each check and test required by this Section for two years. The records for the checks and tests required by Subsection B of this Section shall include:

1. for Paragraph B.1 of this Section, the model and serial number of the dose calibrator, the identity and calibrated activity of the radionuclide contained in the check source, the date of the check, the activity measured, the instrument settings, and the initials of the individual who performed the check;

2. for Paragraph B.2 of this Section, the model and serial number of the dose calibrator, the model and serial number of each source used and the identity of the radionuclide contained in the source and its activity, the date of the test, the results of the test, the instrument settings, and the signature of the radiation safety officer;

3. for Paragraph B.3 of this Section, the model and serial number of the dose calibrator, the calculated activities, the measured activities, the date of the test, and the signature of the radiation safety officer; and

4. for Paragraph B.4 of this Section, the model and serial number of the dose calibrator, the configuration and calibrated activity of the source measured, the activity of the source, the activity measured and the instrument setting for each volume measured, the date of the test, and the signature of the radiation safety officer.

F. Possession, Use, Calibration, and Check of Instruments to Measure Dosages of Alpha-Emitting or Beta-Emitting Radionuclides

1. This Subsection does not apply to unit dosages of alpha-emitting or beta-emitting radionuclides that are obtained from a manufacturer or preparer licensed in accordance with LAC 33:XV.Chapter 3, equivalent agreement state, or Nuclear Regulatory Commission requirements.

2. For other than unit dosages obtained in accordance with Paragraph F.1 of this Section, a licensee shall possess and use instrumentation to measure the radioactivity of alpha-emitting or beta-emitting radionuclides. The licensee shall have procedures for use of the instrumentation. The licensee shall measure, by direct measurement or by combination of measurements and calculations, the amount of radioactivity in dosages of alpha-emitting or beta-emitting

radionuclides prior to administration to each patient or human research subject. In addition, the licensee shall:

a. perform tests before initial use, periodically, and following repair on each instrument for accuracy, linearity, and geometry dependence, as appropriate for the use of the instrument and make adjustments when necessary; and

b. check each instrument for constancy and proper operation at the beginning of each day of use.

G. A licensee shall calibrate the instrumentation required in Subsection A of this Section in accordance with nationally-recognized standards or the manufacturer's instructions.

AUTHORITY NOTE: Promulgated in accordance with R.S. 30:2001 et seq.

HISTORICAL NOTE: Promulgated by the Department of Environmental Quality, Office of Air Quality and Radiation Protection, Radiation Protection Division, LR 18:34 (January 1992), amended LR 24:2103 (November 1998), amended by the Office of Environmental Assessment, Environmental Planning Division, LR 30:1175 (June 2004).

§716. Calibration and Checking of Survey Instruments

A. A licensee shall ensure that the survey instruments used to show compliance with this Chapter have been calibrated before first use, annually, and following repair.

B. To satisfy the requirements of Subsection A of this Section, the licensee shall:

1. calibrate all required scale readings up to 1,000 milliroentgens (10 mSv) per hour with a radiation source;

2. for each scale that shall be calibrated, calibrate two readings separated by at least 50 percent of the scale rating; and

3. conspicuously note on the instrument the apparent dose rate from a dedicated check source as determined at the time of calibration, and the date of calibration.

C. To satisfy the requirements of Subsection B of this Section, the licensee shall consider a point as calibrated if the indicated exposure rate differs from the calculated exposure rate by not more than 20 percent, and shall conspicuously attach a correction chart or graph to the instrument. A licensee may not use survey instruments if the difference between the indicated exposure rate and the calculated exposure rate is more than the allowed 20 percent.

D. A licensee shall check each survey instrument for proper operation with the dedicated check source before each use. The licensee is not required to keep records of these checks.

E. The licensee shall retain a record of each calibration required in Subsection A of this Section for two years. The record shall include:

1. a description of the calibration procedure; and

2. a description of the source used and the certified dose rates from the source, and the rates indicated by the instrument being calibrated, the correction factors deduced from the calibration data, the signature of the individual who performed the calibration, and the date of calibration.

F. To meet the requirements of Subsections A, B, and C of this Section, the licensee may obtain the services of individuals licensed by the department, the U.S. Nuclear Regulatory Commission, an agreement state, or a licensing state to perform calibrations of survey instruments. Records of calibrations that contain information required by Subsection E of this Section shall be maintained by the licensee.

AUTHORITY NOTE: Promulgated in accordance with R.S. 30:2001 et seq.

HISTORICAL NOTE: Promulgated by the Department of Environmental Quality, Office of Air Quality and Radiation Protection, Radiation Protection Division, LR 18:34 (January 1992), amended by the Office of Environmental Assessment, Environmental Planning Division, LR 26:2589 (November 2000), LR 30:1176 (June 2004).

§717. Assay of Radiopharmaceutical Dosages

A. A licensee shall determine and record the activity of each dosage before medical use.

B. For a unit dosage, this determination shall be made by:

1. direct measurement of radioactivity; or

2. a decay correction, based on the activity or activity concentration determined by:

a. a manufacturer or preparer licensed under LAC 33:XV.328.J or equivalent agreement state requirements; or

b. a U.S. Nuclear Regulatory Commission or agreement state licensee, for use in research in accordance with a Radioactive Drug Research Committee-approved protocol or an Investigational New Drug (IND) protocol accepted by FDA.

C. For other than unit dosages, this determination shall be made by:

1. direct measurement of radioactivity;

2. a combination of measurement of radioactivity and mathematical calculations; or

3. a combination of volumetric measurements and mathematical calculations, based on the measurement made by a manufacturer or preparer licensed under LAC 33:XV.328.J or equivalent agreement state requirements.

D. Unless otherwise directed by the authorized user, a licensee may not use a dosage if the dosage does not fall within the prescribed dosage range or if the dosage differs from the prescribed dosage by more than 20 percent.

E. A licensee shall retain a record of the dosage determination required by this Section for three years. The record shall contain:

1. the radiopharmaceutical;

2. the patient's or human research subject's name or identification number, if one has been assigned;

3. the prescribed dosage, the determined dosage, or a notation that the total activity is less than 1.1 MBq (30 µCi);

4. the date and time of the dosage determination; and

5. the name of the individual who determined the dosage.

AUTHORITY NOTE: Promulgated in accordance with R.S. 30:2001 et seq.
HISTORICAL NOTE: Promulgated by the Department of Environmental Quality, Office of Air Quality and Radiation Protection, Radiation Protection Division, LR 18:34 (January 1992), amended LR 24:2103 (November 1998), amended by the Office of Environmental Assessment, Environmental Planning Division, LR 30:1176 (June 2004).

§718. Authorization for Calibration and Reference Sources

A. Any person authorized by LAC 33:XV.702 for medical use of radioactive material may receive, possess, and use the following radioactive material for check, calibration, and reference use:

1. sealed sources manufactured and distributed by persons specifically licensed pursuant to Chapter 3 of these regulations or equivalent provisions of the U.S. Nuclear Regulatory Commission, an agreement state, or a licensing state, and that do not exceed 15 millicuries (555 MBq) each;

2. any radioactive material listed in LAC 33:XV.729 or 731 with a half-life of 100 days or less in individual amounts not to exceed 15 millicuries (555 MBq);

3. any radioactive material listed in LAC 33:XV.729 or 731 with a half-life greater than 100 days in individual amounts not to exceed 200 microcuries (7.4 MBq) each; and

4. technetium-99m in individual amounts not to exceed 50 millicuries (1.85 GBq).

AUTHORITY NOTE: Promulgated in accordance with R.S. 30:2001 et seq.
HISTORICAL NOTE: Promulgated by the Department of Environmental Quality, Office of Air Quality and Radiation Protection, Radiation Protection Division, LR 18:34 (January 1992).

§719. Requirements for Possession of Sealed Sources and Brachytherapy Sources

A. Each licensee shall do the following.

l. Follow radiation safety and handling instructions approved by the department, the U.S. Nuclear Regulatory Commission, an agreement state, or a licensing state, and furnished by the manufacturer on the label attached to the source, device, or permanent container thereof, or in the leaflet or brochure that accompanies the source or device, and maintain such instruction in a legible and conveniently available form.

2. Assure that needles or standard medical applicator cells containing cobalt-60 as wire, radium-226, or cesium-137 are not opened while in the licensee's possession unless specifically authorized by the department.

B. A licensee in possession of a sealed source shall assure that:

1. the source is tested for leakage before its first use unless the licensee has a certificate from the supplier indicating that the source was tested within six months before transfer to the licensee; and

2. the source is tested for leakage at intervals not to exceed six months or at intervals approved by the department, another agreement state, a licensing state, or the U.S. Nuclear Regulatory Commission.

C. To satisfy the leak test requirements of Subsection B of this Section, the licensee shall assure that:

1. leak tests are capable of detecting the presence of 0.005 microcurie (185 Bq) of radioactive material on the test sample or, in the case of radium, the escape of radon at the rate of 0.001 microcurie (37 Bq) per 24 hours;

2. test samples are taken from the source or from the surfaces of the device in which the source is mounted or stored on which radioactive contamination might be expected to accumulate; and

3. test samples are taken when the source is in the "off" position.

D. A licensee shall retain leak test records for two years. The records shall contain the model number and serial number, if assigned, of each source tested; the identity of each source radionuclide and its estimated activity; the measured activity of each test sample expressed in microcuries (becquerels); a description of the method used to measure each test sample; the date of the test; and the signature of the radiation safety officer.

E. If the leak test reveals the presence of 0.005 microcurie (185 Bq) or more of removable contamination, the licensee shall:

1. immediately withdraw the sealed source from use and store it in accordance with the requirements of these regulations; and

2. file a written report with the Office of Environmental Compliance, Emergency and Radiological Services Division, within five days of receiving the leak test results describing the equipment involved, the test results, and the action taken.

F. A licensee need not perform a leak test on the following sources:

1. sources containing only radioactive material with a half-life of less than 30 days;

2. sources containing only radioactive material as a gas;

3. sources containing 100 microcuries (3.7 MBq) or less of beta- or photon-emitting material or 10 microcuries (370 kBq) or less of alpha-emitting material;

4. seeds of iridium-192 encased in nylon ribbon; and

5. sources stored and not being used. The licensee shall, however, test each such source for leakage before any use or transfer unless it has been tested for leakage within six months before the date of use or transfer.

G. A licensee in possession of a sealed source or brachytherapy source shall conduct a physical inventory of all such sources at intervals not to exceed three months. The licensee shall retain each inventory record for five years. The inventory records shall contain the model number of each source and serial number if one has been assigned, the identity of each source radionuclide and its estimated activity, the location of each source, date of the inventory, and the signature of the radiation safety officer.

H. A licensee in possession of a sealed source or brachytherapy source shall survey with a radiation survey instrument at intervals not to exceed three months all areas where such sources are stored. This does not apply to teletherapy sources in teletherapy units or sealed sources in diagnostic devices.

I. A licensee shall retain a record of each survey required in Subsection H of this Section for two years. The record shall include the date of the survey, a sketch of each area that was surveyed, the measured dose rate at several points in each area expressed in milliroentgens per hour, the model number and serial number of the survey instrument used to make the survey, and the signature of the radiation safety officer.

J. Before the first medical use of a brachytherapy source on or after October 24, 2002, a licensee shall have:

1. determined the source output or activity using a dosimetry system that meets the requirements of LAC 33:XV.755.A;

2. determined source positioning accuracy within applicators; and

3. used published protocols currently accepted by nationally-recognized bodies to meet the requirements of Paragraphs J.1 and J.2 of this Section.

K. A licensee may use measurements provided by the source manufacturer or by a calibration laboratory accredited by the American Association of Physicists in Medicine that are made in accordance with Subsection J of this Section.

L. A licensee shall mathematically correct the outputs or activities determined in Subsection A of this Section for physical decay at intervals consistent with 1 percent physical decay.

M. A licensee shall retain a record of each calibration in accordance with LAC 33:XV.744.B.

N. Only an authorized medical physicist shall calculate the activity of each strontium-90 source that is used to determine the treatment times for ophthalmic treatments. The decay shall be based on the activity determined in accordance with Subsections J-M of this Section.

O. A licensee shall retain a record of the activity of each strontium-90 source in accordance with LAC 33:XV.744.C.

AUTHORITY NOTE: Promulgated in accordance with R.S. 30:2001 et seq.

HISTORICAL NOTE: Promulgated by the Department of Environmental Quality, Office of Air Quality and Radiation Protection, Radiation Protection Division, LR 18:34 (January 1992), amended by the Office of Environmental Assessment, Environmental Planning Division, LR 26:2589 (November 2000), LR 30:1176 (June 2004), amended by the Office of the Secretary, Legal Affairs Division, LR 31:2533 (October 2005).

§720. Syringe Shields

A. A licensee shall keep syringes that contain radioactive material to be administered in a radiation shield.

B. A licensee shall require each individual who prepares or administers radiopharmaceuticals to use a syringe radiation shield unless the use of the shield is contraindicated for that patient or human research subject.

AUTHORITY NOTE: Promulgated in accordance with R.S. 30:2001 et seq.

HISTORICAL NOTE: Promulgated by the Department of Environmental Quality, Office of Air Quality and Radiation Protection, Radiation Protection Division, LR 18:34 (January 1992), amended LR 24:2103 (November 1998).

§721. Syringe Labels

A. Unless it is utilized immediately, a licensee shall conspicuously label each syringe, or syringe radiation shield that contains a syringe with a radiopharmaceutical, with the radiopharmaceutical name or its abbreviation, the type of diagnostic study or therapy procedure to be performed, or the patient's or human research subject’s name.

AUTHORITY NOTE: Promulgated in accordance with R.S. 30:2001 et seq.

HISTORICAL NOTE: Promulgated by the Department of Environmental Quality, Office of Air Quality and Radiation Protection, Radiation Protection Division, LR 18:34 (January 1992), amended LR 24:2103 (November 1998).

§722. Vial Shields

A. A licensee shall require each individual preparing or handling a vial that contains a radiopharmaceutical to keep the vial in a vial radiation shield.

AUTHORITY NOTE: Promulgated in accordance with R.S. 30:2001 et seq.

HISTORICAL NOTE: Promulgated by the Department of Environmental Quality, Office of Air Quality and Radiation Protection, Radiation Protection Division, LR 18:34 (January 1992).

§723. Vial and Vial Shield Labels

A. Each vial that contains a radiopharmaceutical must be labeled to identify the radioactive drug. Each syringe shield and vial shield must also be labeled unless the label on the syringe or vial is visible when shielded.

AUTHORITY NOTE: Promulgated in accordance with R.S. 30:2001 et seq.

HISTORICAL NOTE: Promulgated by the Department of Environmental Quality, Office of Air Quality and Radiation Protection, Radiation Protection Division, LR 18:34 (January

1992), amended by the Office of the Secretary, Legal Affairs Division, LR 32:813 (May 2006).

§724. Surveys for Contamination and Ambient Radiation Dose Rate

A. A licensee shall survey with a radiation detection survey instrument at the end of each day of use all areas where radiopharmaceuticals are routinely prepared for use or administered.

B. A licensee shall survey with a radiation detection survey instrument at least once each week all areas where radiopharmaceuticals or radioactive wastes are stored.

C. A licensee shall conduct the surveys required by LAC 33:XV.724.A and B so as to be able to measure rates as low as 0.1 milliroentgens (1 μSv) per hour.

D. A licensee shall establish dose rate action levels for the surveys required by LAC 33:XV.724.A and B and shall require that the individual performing the survey immediately notify the radiation safety officer if a rate exceeds an action level.

E. A licensee shall survey for removable contamination each week of use all areas where radiopharmaceuticals are routinely prepared for use or administered and each week where radioactive materials are stored.

F. A licensee shall conduct the surveys required by LAC 33:XV.724.E so as to be able to detect contamination on each wipe sample of 2,000 disintegrations per minute (33.3 Bq).

G. A licensee shall establish removable contamination action levels for the surveys required by LAC 33:XV.724.E and shall require that the individual performing the survey immediately notify the radiation safety officer if contamination exceeds action levels.

H. A licensee shall retain a record of each survey required by LAC 33:XV.724.A, B, and E for two years. The record must include the date of the survey, a sketch of each area surveyed, action levels established for each area, the measured dose rate at several points in each area expressed in milliroentgens per hour or the removable contamination in each area expressed in disintegrations per minute (becquerels) per 100 square centimeters, the serial number and the model number of the instrument used to make the survey or analyze the samples, and the initials of the individual who performed the survey.

AUTHORITY NOTE: Promulgated in accordance with R.S. 30:2001 et seq.

HISTORICAL NOTE: Promulgated by the Department of Environmental Quality, Office of Air Quality and Radiation Protection, Radiation Protection Division, LR 18:34 (January 1992).

§725. Release of Individuals Containing Radiopharmaceuticals or Permanent Implants

A. A licensee may authorize the release from its control of any individual who has been administered radiopharmaceutical or permanent implants containing radioactive material if the total effective dose equivalent to any other individual from exposure to the released individual is not likely to exceed 5 millisieverts (0.5 rem).

B. A licensee shall provide the released individual with instructions, including written instructions, on actions recommended to maintain doses to other individuals as low as is reasonably achievable if the total effective dose equivalent to any other individual is likely to exceed 1 millisievert (0.1 rem). If the dose to a breast-feeding infant or child could exceed 1 millisievert (0.1 rem) assuming there were no interruption of breast-feeding, the instructions shall also include:

1. guidance on the interruption or discontinuation of breast-feeding; and

2. information on the consequences of failure to follow the guidance.

C. The licensee shall maintain a record of the basis for authorizing the release of an individual for three years after the date of release, if the total effective dose equivalent is calculated by:

1. using the retained activity rather than the activity administered;

2. using an occupancy factor less than 0.25 at 1 meter;

3. using the biological or effective half-life; or

4. considering the shielding by tissue.

D. The licensee shall maintain a record for three years after the date of release that instructions were provided to a breast-feeding woman if the radiation dose to the infant or child from continued breast-feeding could result in a total effective dose equivalent exceeding 5 millisieverts (0.5 rem).

AUTHORITY NOTE: Promulgated in accordance with R.S. 30:2001 et seq.

HISTORICAL NOTE: Promulgated by the Department of Environmental Quality, Office of Air Quality and Radiation Protection, Radiation Protection Division, LR 18:34 (January 1992), amended LR 24:2104 (November 1998).

§726. Mobile Medical Service Technical Requirements

A. A licensee providing mobile medical services shall do the following.

1. Obtain a letter signed by the management of each client for which services are rendered that permits the use of radioactive material at the client's address and clearly delineates the authority and responsibility of the licensee and the client.

2. Check instruments used to measure the activity of unsealed radioactive material for proper function before medical use at each client's address or on each day of use, whichever is more frequent. At a minimum, the check for proper function required by this Paragraph shall include a constancy check.

3. Check survey instruments for proper operation with a dedicated check source before use at each client's address.

4. Before leaving a client's address, survey all areas of use to ensure compliance with the requirements in LAC 33:XV.Chapter 4.

B. A mobile medical service may not have radioactive material delivered from the manufacturer or the distributor to the client unless the client has a license allowing possession of the radioactive material. Radioactive material delivered to the client shall be received and handled in conformance with the client's license.

C. A licensee providing mobile medical services shall retain a copy of each letter that permits the use of radioactive material at a client's address, as required by Paragraph A.1 of this Section. Each letter shall be retained for three years after the last provision of service.

D. A licensee providing mobile medical services shall retain the record of each survey required by Paragraph A.4 of this Section for three years. The record shall include the date of the survey, the results of the survey, the instrument used to make the survey, and the name of the individual who performed the survey.

AUTHORITY NOTE: Promulgated in accordance with R.S. 30:2001 et seq.

HISTORICAL NOTE: Promulgated by the Department of Environmental Quality, Office of Air Quality and Radiation Protection, Radiation Protection Division, LR 18:34 (January 1992), amended by the Office of Environmental Assessment, Environmental Planning Division, LR 30:1177 (June 2004).

§727. Storage of Volatiles and Gases

A. A licensee shall store volatile radiopharmaceuticals and radioactive gases in the shippers' radiation shield and container.

B. A licensee shall store and use a multidose container in a properly functioning fume hood.

AUTHORITY NOTE: Promulgated in accordance with R.S. 30:2001 et seq.

HISTORICAL NOTE: Promulgated by the Department of Environmental Quality, Office of Air Quality and Radiation Protection, Radiation Protection Division, LR 18:34 (January 1992).

§728. Decay-in-Storage

A. A licensee shall hold radioactive material with a physical half-life of less than 120 days for decay-in-storage before disposal in ordinary trash and is exempt from the requirements of LAC 33:XV.460 of these regulations if the licensee:

1. holds radioactive material for decay a minimum of 10 half-lives;

2. monitors radioactive material at the container surface before disposal as ordinary trash and determines that its radioactivity cannot be distinguished from the background radiation level with an appropriate radiation detection survey instrument set on its most sensitive scale and with no interposed shielding;

3. removes or obliterates all radiation labels, except for radiation labels on materials that are within containers and that will be managed as biomedical waste after they have been released from the licensee; and

4. separates and monitors each generator column individually with all radiation shielding removed to ensure that its contents have decayed to background radiation level before disposal.

B. For radioactive material disposed in accordance with Subsection A of this Section, the licensee shall retain a record of each disposal for two years. The record must include the date of the disposal, the date on which the radioactive material was placed in storage, the radionuclides disposed, the model and serial number of the survey instrument used, the background dose rate, the radiation dose rate measured at the surface of each waste container, and the name of the individual who performed the disposal.

AUTHORITY NOTE: Promulgated in accordance with R.S. 30:2001 et seq.

HISTORICAL NOTE: Promulgated by the Department of Environmental Quality, Office of Air Quality and Radiation Protection, Radiation Protection Division, LR 18:34 (January 1992), amended by the Office of Environmental Assessment, Environmental Planning Division, LR 27:1238 (August 2001), LR 30:1177 (June 2004), amended by the Office of the Secretary, Legal Affairs Division, LR 32:813 (May 2006).

§729. Use of Radiopharmaceuticals for Uptake, Dilution, or Excretion Studies

A. A licensee may use the following prepared radiopharmaceuticals for diagnostic studies involving the measurement of uptake, dilution, or excretion:

1. iodine-131 as sodium iodide, iodinated human serum albumin (IHSA), labeled rose bengal, or sodium iodohippurate;

2. iodine-125 as sodium iodide or iodinated human serum albumin (IHSA);

3. cobalt-57 as labeled cyanocobalamin;

4. cobalt-58 as labeled cyanocobalamin;

5. chromium-51 as sodium chromate or labeled human serum albumin;

6. iron-59 as citrate; and

7. any radioactive material in a radiopharmaceutical for a diagnostic use involving measurements of uptake, dilution, or excretion for which the Food and Drug Administration (FDA) has accepted a "Notice of Claimed Investigational Exemption for a New Drug" (IND) or approved a "New Drug Application" (NDA).

B. A licensee using a radiopharmaceutical specified in Subsection A of this Section for a clinical procedure other than one specified in the product label or package insert instructions shall comply with the product label or package insert instructions regarding physical form, route of administration, and dosage range.

C. The radiopharmaceuticals specified in Subsection A of this Section shall be:

1. obtained from a manufacturer or preparer licensed in accordance with LAC 33:XV.328.J or equivalent Nuclear Regulatory Commission or agreement state requirements;

2. prepared by an authorized nuclear pharmacist, a physician who is an authorized user and who meets the requirements specified in LAC 33:XV.763.C, or an individual under the supervision of either as specified in LAC 33:XV.709;

3. obtained from and prepared by a Nuclear Regulatory Commission or agreement state licensee, for use in research in accordance with a Radioactive Drug Research Committee-approved protocol or an Investigational New Drug (IND) protocol accepted by FDA; or

4. prepared by the licensee, for use in research in accordance with a Radioactive Drug Research Committee-approved application or an IND protocol accepted by FDA.

AUTHORITY NOTE: Promulgated in accordance with R.S. 30:2001 et seq.

HISTORICAL NOTE: Promulgated by the Department of Environmental Quality, Office of Air Quality and Radiation Protection, Radiation Protection Division, LR 18:34 (January 1992), amended LR 24:2104 (November 1998), amended by the Office of Environmental Assessment, Environmental Planning Division, LR 30:1177 (June 2004).

§730. Possession of Survey Instrument

A. A licensee authorized to use radioactive material for uptake, dilution, and excretion studies shall possess a portable radiation detection survey instrument capable of detecting dose rates over the range 0.1 milliroentgen (1.0 μSv) per hour to 50 milliroentgens (500 μSv) per hour. The instrument shall be operable and calibrated in accordance with LAC 33:XV.716.

AUTHORITY NOTE: Promulgated in accordance with R.S. 30:2001 et seq.

HISTORICAL NOTE: Promulgated by the Department of Environmental Quality, Office of Air Quality and Radiation Protection, Radiation Protection Division, LR 18:34 (January 1992).

§731. Use of Radiopharmaceuticals, Generators, and Reagent Kits for Imaging and Localization Studies

A. A licensee may use the following radiopharmaceuticals, generators, and reagent kits for imaging and localization studies:

1. molybdenum-99/technetium-99mm generators for the elution or extraction of technetium-99m as pertechnetate;

2. technetium-99m as pertechnetate;

3. prepared radiopharmaceuticals and reagent kits for the preparation of the following technetium-99m labeled radiopharmaceuticals:

a. sulfur colloid;

b. pentetate sodium;

c. human serum albumin microspheres;

d. polyphosphate;

e. macroaggregated human serum albumin;

f. etidronate sodium;

g. stannous pyrophosphate;

h. human serum albumin;

i. medronate sodium;

j. gluceptate sodium;

k. oxidronate sodium;

l. disofenin; and

m. succimer;

4. iodine-131 as sodium iodide, iodinated human serum albumin, macroaggregated iodinated human serum albumin, colloidal (macroaggregated) iodinated human serum albumin, rose bengal, or sodium iodohippurate;

5. iodine-125 as sodium iodide or fibrinogen;

6. chromium-51 as human serum albumin;

7. gold-198 in colloidal form;

8. gallium-67 as citrate;

9. indium-111 as chloride or DTPA;

10. thallium-201 as chloride;

11. iodine-123 as sodium iodide or iodohippurate; and

12. any radioactive material in a diagnostic radiopharmaceutical, except aerosol or gaseous form, or any generator or reagent kit for preparation and diagnostic use of a radiopharmaceutical containing radioactive material for which the Food and Drug Administration has accepted a "Notice of Claimed Investigational Exemption for a New Drug" (IND) or approved a "New Drug Application" (NDA).

B. A licensee using radiopharmaceuticals for clinical procedures shall comply with the product label or package insert regarding physical form, route of administration, and dosage range.

C. A licensee shall elute generators in compliance with LAC 33:XV.732 and prepare radiopharmaceuticals from kits in accordance with the manufacturer's instructions.

D. Technetium-99m pentetate as an aerosol for lung function studies is not subject to the restrictions in Subsection B of this Section.

E. Provided the conditions of LAC 33:XV.733 are met, a licensee shall use radioactive aerosols or gases only if specific application is made to and approved by the department.

F. The radiopharmaceuticals specified in Subsection A of this Section shall be either:

1. obtained from a manufacturer or preparer licensed in accordance with LAC 33:XV.328.K or equivalent Nuclear Regulatory Commission, or agreement state requirements; or

2. prepared by an authorized nuclear pharmacist, a physician who is an authorized user and who meets the requirements specified in LAC 33:XV.763.C, or an individual under the supervision of either as specified in LAC 33:XV.709.

G. Except for quantities that require a written directive in accordance with LAC 33:XV.777.B, a licensee may use any unsealed radioactive material prepared for medical use for imaging and localization studies that is:

1. obtained from a manufacturer or preparer licensed under LAC 33:XV.328.J or equivalent agreement state requirements;

2. prepared by an authorized nuclear pharmacist, a physician who is an authorized user and who meets the requirements specified in LAC 33:XV.763.D, or an individual under the supervision of either as specified in LAC 33:XV.709;

3. obtained from and prepared by a Nuclear Regulatory Commission or agreement state licensee, for use in research in accordance with a Radioactive Drug Research Committee-approved protocol or an Investigational New Drug (IND) protocol accepted by FDA; or

4. prepared by the licensee, for use in research in accordance with a Radioactive Drug Research Committee-approved application or an IND protocol accepted by FDA.

AUTHORITY NOTE: Promulgated in accordance with R.S. 30:2001 et seq.

HISTORICAL NOTE: Promulgated by the Department of Environmental Quality, Office of Air Quality and Radiation Protection, Radiation Protection Division, LR 18:34 (January 1992), amended LR 24:2104 (November 1998), amended by the Office of Environmental Assessment, Environmental Planning Division, LR 26:2589 (November 2000), LR 27:1238 (August 2001), LR 30:1178 (June 2004).

§732. Permissible Molybdenum-99 Concentration

A. A licensee shall not administer a radiopharmaceutical containing more than 0.15 microcurie of molybdenum-99 per millicurie of technetium-99m (0.15 kilobecquerel of molybdenum-99 per megabecquerel of technetium-99m).

B. A licensee preparing technetium-99m radiopharmaceuticals from molybdenum-99/technetium-99m generators shall measure the molybdenum-99 concentration in each eluate or extract.

C. A licensee who must measure molybdenum concentration shall retain a record of each measurement for two years. The record shall include, for each elution or extraction of technetium-99m, the measured activity of the technetium expressed in millicuries (megabecquerels), the measured activity of molybdenum expressed in microcuries (kilobecquerels), the ratio of the measures expressed as microcuries of molybdenum per millicurie of technetium (kilobecquerels of molybdenum per megabecquerel of technetium), the date of the test, and the initials of the individual who performed the test.

D. A licensee shall report immediately each occurrence of molybdenum-99 concentration exceeding the limits specified in LAC 33:XV.732.A to the Office of Environmental Compliance by telephone at (225) 765-0160.

AUTHORITY NOTE: Promulgated in accordance with R.S. 30:2001 et seq.

HISTORICAL NOTE: Promulgated by the Department of Environmental Quality, Office of Air Quality and Radiation Protection, Radiation Protection Division, LR 18:34 (January 1992), amended by the Office of Environmental Assessment, Environmental Planning Division, LR 26:2589 (November 2000).

§733. Control of Aerosols and Gases

A. A licensee who administers radioactive aerosols or gases shall do so with a system that will keep airborne concentrations within the limits prescribed by LAC 33:XV.412 and 416 of these regulations.

B. The system shall either be directly vented to the atmosphere through an air exhaust or provide for collection and decay or disposal of the aerosol or gas in a shielded container.

C. Reserved.

D. Before receiving, using, or storing a radioactive gas, the licensee shall calculate the amount of time needed after a release to reduce the concentration in the area of use to the occupational limit listed in these regulations. The calculation shall be based on the highest activity of gas handled in a single container and the measured available air exhaust rate.

E. A licensee shall post the time calculated in LAC 33:XV.733.D at the area of use and require that, in case of a gas spill, individuals evacuate the room until the posted time has elapsed.

F. A licensee shall check the operation of collection systems monthly and measure the ventilation rates in areas of use at intervals not to exceed six months. Records of these checks and measurements shall be maintained for two years.

G. A copy of the calculations required in LAC 33:XV.733.D shall be recorded and retained for the duration of the license.

AUTHORITY NOTE: Promulgated in accordance with R.S. 30:2001 et seq.

HISTORICAL NOTE: Promulgated by the Department of Environmental Quality, Office of Air Quality and Radiation Protection, Radiation Protection Division, LR 18:34 (January 1992).

§734. Possession of Survey Instruments

A. A licensee authorized to use radioactive material for imaging and localization studies shall possess a portable radiation detection survey instrument capable of detecting dose rates over the range of 0.1 milliroentgen per hour to 50 milliroentgens per hour, or a portable radiation measurement survey instrument capable of measuring dose rates over the range of 1 milliroentgen per hour to 1,000 milliroentgens per hour. The instruments shall be operable and calibrated in accordance with LAC 33:XV.716.

AUTHORITY NOTE: Promulgated in accordance with R.S. 30:2001 et seq.

HISTORICAL NOTE: Promulgated by the Department of Environmental Quality, Office of Air Quality and Radiation Protection, Radiation Protection Division, LR 18:34 (January 1992).

§735. Use of Radiopharmaceuticals for Therapy

A. A licensee may use the following prepared radiopharmaceuticals:

1. iodine-131 as iodide for treatment of hyperthyroidism, cardiac dysfunction, and thyroid carcinoma;

2. phosphorus-32 as soluble phosphate for treatment of polycythemia vera, leukemia, and bone metastases;

3. phosphorus-32 as colloidal chromic phosphate for intracavitary treatment of malignant effusions;

4. any radioactive material in a radiopharmaceutical and for a therapeutic use for which the Food and Drug Administration has accepted a "Notice of Claimed Investigational Exemption for a New Drug" (IND), or approved a "New Drug Application" (NDA). The licensee shall comply with the package insert instructions regarding indications and method of administration.

B. The radiopharmaceuticals specified in Subsection A of this Section shall be either:

1. obtained from a manufacturer or preparer licensed in accordance with LAC 33:XV.328.J or equivalent Nuclear Regulatory Commission or agreement state requirements; or

2. prepared by an authorized nuclear pharmacist, a physician who is an authorized user and who meets the requirements specified in LAC 33:XV.763.C, or an individual under the supervision of either as specified in LAC 33:XV.709.

C. A licensee may use any unsealed radioactive material prepared for medical use and for which a written directive is required that is:

1. obtained from a manufacturer or preparer licensed under LAC 33:XV.328.J or equivalent agreement state requirements;

2. prepared by an authorized nuclear pharmacist, a physician who is an authorized user and who meets the requirements specified in LAC 33:XV.763.E, or an individual under the supervision of either as specified in LAC 33:XV.709;

3. obtained from and prepared by a Nuclear Regulatory Commission or agreement state licensee, for use in research in accordance with an IND protocol accepted by FDA; or

4. prepared by the licensee, for use in research in accordance with an IND protocol accepted by FDA.

AUTHORITY NOTE: Promulgated in accordance with R.S. 30:2001 et seq.

HISTORICAL NOTE: Promulgated by the Department of Environmental Quality, Office of Air Quality and Radiation Protection, Radiation Protection Division, LR 18:34 (January 1992), amended LR 24:2104 (November 1998), amended by the Office of Environmental Assessment, Environmental Planning Division, LR 30:1178 (June 2004).

§736. Safety Instruction

A. A licensee shall provide oral and written radiation safety instruction for all personnel caring for patients or human research subjects undergoing radiopharmaceutical therapy. Refresher training shall be provided at intervals not to exceed one year.

B. To satisfy Subsection A of this Section, the instruction shall describe the licensee's procedures for:

1. patient or human research subject control;

2. visitor control, including:

a. routine visitation to hospitalized individuals in accordance with LAC 33:XV.421.A.1; and

b. visitation authorized in accordance with LAC 33:XV.421.C;

3. contamination control;

4. waste control;

5. notification of the radiation safety officer, or his or her designee, and an authorized user, in the case of the patient's or human research subject's death or medical emergency; and

6. LAC 33:XV.Chapter 10 training requirements.

C. A licensee shall keep a record of individuals receiving instruction required by Subsection A of this Section, a description of the instruction, the date of instruction, and the name of the individual who gave the instruction. Such record shall be maintained for inspection by the department for two years.

AUTHORITY NOTE: Promulgated in accordance with R.S. 30:2001 et seq.

HISTORICAL NOTE: Promulgated by the Department of Environmental Quality, Office of Air Quality and Radiation Protection, Radiation Protection Division, LR 18:34 (January 1992), amended LR 24:2105 (November 1998), amended by the Office of Environmental Assessment, Environmental Planning Division, LR 26:2589 (November 2000), LR 30:1178 (June 2004), amended by the Office of the Secretary, Legal Affairs Division, LR 32:813 (May 2006).

§737. Safety Precautions

A. For each patient or human research subject receiving radiopharmaceutical therapy and hospitalized for compliance with LAC 33:XV.725, a licensee shall do the following:

1. quarter the patient or human research subject either in:

a. a private room with a private sanitary facility; or

b. a room, with a private sanitary facility, with another individual who also has received therapy with

unsealed radioactive material and who also cannot be released under LAC 33:XV.725;

2. post the patient's or human research subject's door with a "Caution: Radioactive Material" sign and note on the door or on the patient's or human research subject's chart where and how long visitors may stay in the patient's or human research subject's room;

3. authorize visits by individuals under 18 years of age only on a case-by-case basis with the approval of the authorized user after consultation with the radiation safety officer;

4. promptly after administration of the dosage, measure the dose rates in contiguous restricted and unrestricted areas with a radiation measurement survey instrument to demonstrate compliance with the requirements of LAC 33:XV.415 of these regulations and retain for two years a record of each survey that includes the time and date of the survey, a plan of the area or list of points surveyed, the measured dose rate at several points expressed in milliroentgens per hour, the instrument used to make the survey, and the initials of the individual who made the survey;

5. either monitor material and items removed from the patient's or human research subject's room to determine that any contamination cannot be distinguished from the natural background radiation level with a radiation detection survey instrument set on its most sensitive scale and with no interposed shielding, or handle these materials and items as radioactive waste;

6. survey the patient's or human research subject's room and private sanitary facility for removable contamination with a radiation detection survey instrument before assigning another patient or human research subject to the room. The room shall not be reassigned until removable contamination is less than 200 disintegrations per minute (3.33 Bq) per 100 square centimeters; and

7. submit to the Office of Environmental Compliance, Emergency and Radiological Services Division, an acceptable procedure to measure the thyroid burden of each individual who helps prepare or administer a dosage of iodine-131. Measurements shall be performed within three days after administering the dosage, and records shall include each thyroid burden measurement, date of measurement, the name of the individual whose thyroid burden was measured, and the initials of the individual who made the measurements. The records shall be retained for the period required by LAC 33:XV.472.B.

B. A licensee shall notify the radiation safety officer, or his or her designee, and an authorized user immediately if the patient or human research subject dies or has a medical emergency.

AUTHORITY NOTE: Promulgated in accordance with R.S. 30:2001 et seq.

HISTORICAL NOTE: Promulgated by the Department of Environmental Quality, Office of Air Quality and Radiation Protection, Radiation Protection Division, LR 18:34 (January 1992), amended LR 24:2105 (November 1998), amended by the Office of Environmental Assessment, Environmental Planning Division, LR 26:2589 (November 2000), LR 30:1178 (June 2004), amended by the Office of the Secretary, Legal Affairs Division, LR 31:2533 (October 2005), LR 32:813 (May 2006).

§738. Possession of Survey Instruments

A. A licensee authorized to use radioactive material for radiopharmaceutical therapy shall possess a portable radiation detection survey instrument capable of detecting dose rates over the range 0.1 milliroentgen per hour to 50 milliroentgens per hour, and a portable radiation measurement survey instrument capable of measuring dose rates over the range of 1 milliroentgen per hour to 1,000 milliroentgens per hour. The instruments shall be operable and calibrated in accordance with LAC 33:XV.716.

AUTHORITY NOTE: Promulgated in accordance with R.S. 30:2001 et seq.

HISTORICAL NOTE: Promulgated by the Department of Environmental Quality, Office of Air Quality and Radiation Protection, Radiation Protection Division, LR 18:34 (January 1992).

§739. Use of Sealed Sources for Diagnosis

A. A licensee shall use only sealed sources for diagnostic medical uses as approved in the Sealed Source and Device Registry.

AUTHORITY NOTE: Promulgated in accordance with R.S. 30:2001 et seq.

HISTORICAL NOTE: Promulgated by the Department of Environmental Quality, Office of Air Quality and Radiation Protection, Radiation Protection Division, LR 18:34 (January 1992), amended by the Office of Environmental Assessment, Environmental Planning Division, LR 30:1178 (June 2004).

§740. Availability of Survey Instrument

A. A licensee authorized to use radioactive material as a sealed source for diagnostic purposes shall have available for use a portable radiation detection survey instrument capable of detecting dose rates over the range of 0.1 milliroentgen per hour to 50 milliroentgens per hour or a portable radiation measurement survey instrument capable of measuring dose rates over the range of 1 milliroentgen per hour to 1,000 milliroentgens per hour. The instrument shall be operable and calibrated in accordance with LAC 33:XV.716.

AUTHORITY NOTE: Promulgated in accordance with R.S. 30:2001 et seq.

HISTORICAL NOTE: Promulgated by the Department of Environmental Quality, Office of Air Quality and Radiation Protection, Radiation Protection Division, LR 18:34 (January 1992).

§741. Use of Sources for Brachytherapy

A. A licensee shall use the following sources in accordance with the manufacturer's radiation safety and handling instructions:

1. cesium-137 as a sealed source in needles and applicator cells for topical, interstitial, and intracavitary treatment of cancer;

2. cobalt-60 as a sealed source in needles and applicator cells for topical, interstitial, and intracavitary treatment of cancer;

3. gold-198 as a sealed source in seeds for interstitial treatment of cancer;

4. iodine-125 as a sealed source in seeds for interstitial treatment of cancer; and

5. iridium-192 as seeds encased in nylon ribbon for interstitial treatment of cancer.

B. A licensee shall use only brachytherapy sources for therapeutic medical uses:

1. as approved in the Sealed Source and Device Registry; or

2. in research in accordance with an active Investigational Device Exemption (IDE) application accepted by the FDA, provided the requirements of LAC 33:XV.713.A.1 are met.

AUTHORITY NOTE: Promulgated in accordance with R.S. 30:2001 et seq.
HISTORICAL NOTE: Promulgated by the Department of Environmental Quality, Office of Air Quality and Radiation Protection, Radiation Protection Division, LR 18:34 (January 1992), amended by the Office of Environmental Assessment, Environmental Planning Division, LR 30:1178 (June 2004), amended by the Office of the Secretary, Legal Affairs Division, LR 32:813 (May 2006).

§742. Safety Instructions

A. The licensee shall provide oral and written radiation safety instruction to all personnel caring for a patient or human research subject receiving implant therapy. Refresher training shall be provided at intervals not to exceed one year.

B. To satisfy the requirements of Subsection A of this Section, the instruction shall describe:

1. size and appearance of the brachytherapy sources;

2. safe handling and shielding instructions in case of a dislodged source;

3. procedures for patient or human research subject control;

4. procedures for visitor control, including:

a. routine visitation of hospitalized individuals in accordance with LAC 33:XV.421.A.1; and

b. visitation authorized in accordance with LAC 33:XV.421.C;

5. procedures for notification of the radiation safety officer, or his or her designee, and an authorized user if the patient or human research subject dies or has a medical emergency; and

6. LAC 33:XV.Chapter 10 training requirements.

C. A licensee shall maintain a record of individuals receiving instruction required by Subsection A of this Section, a description of the instruction, the date of instruction, and the name of the individual who gave the instruction for two years.

AUTHORITY NOTE: Promulgated in accordance with R.S. 30:2001 et seq.
HISTORICAL NOTE: Promulgated by the Department of Environmental Quality, Office of Air Quality and Radiation Protection, Radiation Protection Division, LR 18:34 (January 1992), amended LR 24:2105 (November 1998), amended by the Office of Environmental Assessment, Environmental Planning Division, LR 30:1179 (June 2004), amended by the Office of the Secretary, Legal Affairs Division, LR 32:813 (May 2006).

§743. Safety Precautions

A. For each patient or human research subject receiving implant therapy and not released from licensee control in accordance with LAC 33:XV.725, a licensee shall:

1. not quarter the patient or human research subject in the same room as an individual who is not receiving radiation therapy;

2. post the patient’s or human research subject's door with a "Caution: Radioactive Materials" sign and note on the door or the patient’s or human research subject's chart where and how long visitors may stay in the patient’s or human research subject's room;

3. authorize visits by individuals under 18 years of age only on a case-by-case basis with the approval of the authorized user after consultation with the radiation safety officer; and

4. promptly after implanting the sources, survey the dose rates in contiguous restricted and unrestricted areas with a radiation measurement survey instrument to demonstrate compliance with LAC 33:XV.415.A and retain for two years a record of each survey that includes the time and date of the survey, a sketch of the area or list of points surveyed, the measured dose rate at several points expressed in milliroentgens per hour, the instrument used to make the survey, and the initials of the individual who made the survey.

B. A licensee shall have applicable emergency response equipment available near each treatment room to respond to a source:

1. dislodged from the patient; or

2. lodged within the patient following removal of the source applicators.

C. A licensee shall notify the radiation safety officer, or his or her designee, and an authorized user immediately if the patient or human research subject dies or has a medical emergency.

AUTHORITY NOTE: Promulgated in accordance with R.S. 30:2001 et seq.
HISTORICAL NOTE: Promulgated by the Department of Environmental Quality, Office of Air Quality and Radiation Protection, Radiation Protection Division, LR 18:34 (January 1992), amended LR 24:2105 (November 1998), amended by the Office of Environmental Assessment, Environmental Planning Division, LR 30:1179 (June 2004), amended by the Office of the Secretary, Legal Affairs Division, LR 32:814 (May 2006).

§744. Brachytherapy Records

A. Brachytherapy Sources Inventory

1. A licensee shall maintain accountability at all times for all brachytherapy sources in storage or use.

2. Promptly after removing them from a patient or a human research subject, the licensee shall return brachytherapy sources to an area of storage from the area of use, and immediately count or otherwise verify the number returned to ensure that all sources taken from the storage area have been returned.

3. A licensee shall make a record of brachytherapy source utilization that includes:

a. the names of the individuals permitted to handle the sources;

b. the number and activity of sources removed from storage, the room number of use and the patient's or human research subject's name, the time and date the sources were removed from storage, the number and activity of sources in storage after the removal, and the initials of the individual who removed the sources from storage; and

c. the number and activity of sources returned to storage, the room number of use and the patient's or human research subject's name, the time and date the sources were returned to storage, the number and activity of sources in storage after the return, and the initials of the individual who returned the sources to storage.

4. Immediately after implanting sources in a patient or human research subject and immediately after removal of sources from a patient or human research subject, the licensee shall make a radiation survey of the patient or human research subject and the area of use to confirm that no sources have been misplaced. The licensee shall make a record of each survey.

5. A licensee shall maintain the records required in Paragraphs A.3 and 4 of this Section for two years.

B. Records of Calibration Measurements of Brachytherapy Sources

1. A licensee shall maintain a record of the calibrations of brachytherapy sources required by LAC 33:XV.719 for three years after the last use of the source.

2. The record shall include:

a. the date of the calibration;

b. the manufacturer's name, model number, and serial number for the source and the instruments used to calibrate the source;

c. the source output or activity;

d. the source positioning accuracy within the applicators; and

e. the signature of the authorized medical physicist.

C. Records of Decay of Strontium-90 Sources for Ophthalmic Treatments

1. A licensee shall maintain a record of the activity of a strontium-90 source required by LAC 33:XV.719 for the life of the source.

2. The record shall include:

a. the date and initial activity of the source as determined in accordance with LAC 33:XV.719; and

b. for each decay calculation, the date and the source activity as determined in accordance with LAC 33:XV.719.

AUTHORITY NOTE: Promulgated in accordance with R.S. 30:2001 et seq.

HISTORICAL NOTE: Promulgated by the Department of Environmental Quality, Office of Air Quality and Radiation Protection, Radiation Protection Division, LR 18:34 (January 1992), amended LR 24:2106 (November 1998), amended by the Office of Environmental Assessment, Environmental Planning Division, LR 30:1179 (June 2004).

§745. Surveys for Temporary Implants

A. Immediately after implanting sources in a patient or a human research subject, the licensee shall make a survey to locate and account for all sources that have not been implanted.

B. Immediately after removing the last temporary implant source from a patient or human research subject, the licensee shall perform a radiation survey of the patient or human research subject with a radiation detection survey instrument to confirm that all sources have been removed. The licensee shall not release from confinement for medical care a patient or human research subject treated by temporary implant until all sources have been removed.

C. Before releasing a patient or a human research subject treated with a remote afterloader unit from licensee control, a licensee shall survey the patient or the human research subject and the remote afterloader unit with a portable radiation detection survey instrument to confirm that the sources have been removed from the patient or human research subject and returned to the safe shielded position.

D. A licensee shall maintain a record of patient or human research subject surveys that demonstrates compliance with Subsections A, B, and C of this Section for two years. Each record shall include the date and results of the survey, the survey instrument used, and the name of the individual who made the survey.

AUTHORITY NOTE: Promulgated in accordance with R.S. 30:2001 et seq.

HISTORICAL NOTE: Promulgated by the Department of Environmental Quality, Office of Air Quality and Radiation Protection, Radiation Protection Division, LR 18:34 (January 1992), amended LR 24:2106 (November 1998), amended by the Office of Environmental Assessment, Environmental Planning Division, LR 30:1180 (June 2004).

§746. Possession of Survey Instruments

A. A licensee authorized to use radioactive material for implant therapy shall possess a portable radiation detection survey instrument capable of detecting dose rates over the range of 0.1 milliroentgen per hour to 50 milliroentgens per hour, and a portable radiation measurement survey instrument capable of measuring dose rates over the range of 1 milliroentgen per hour to 1,000 milliroentgens per hour. The instruments shall be operable and calibrated in accordance with LAC 33:XV.716.

AUTHORITY NOTE: Promulgated in accordance with R.S. 30:2001 et seq.

HISTORICAL NOTE: Promulgated by the Department of Environmental Quality, Office of Air Quality and Radiation Protection, Radiation Protection Division, LR 18:34 (January 1992).

§747. Use of Sealed Sources in Teletherapy Units, Remote Afterloader Units, and Gamma Stereotactic Radiosurgery Units

A. A licensee shall use sealed sources in teletherapy units, photon emitting remote afterloader units, or gamma stereotactic radiosurgery units for therapeutic medical uses:

1. as approved in the Sealed Source and Device Registry; or

2. in research in accordance with an active Investigational Device Exemption (IDE) application accepted by the FDA, provided the requirements of LAC 33:XV.713.A.1 are met.

AUTHORITY NOTE: Promulgated in accordance with R.S. 30:2001 et seq.

HISTORICAL NOTE: Promulgated by the Department of Environmental Quality, Office of Air Quality and Radiation Protection, Radiation Protection Division, LR 18:34 (January 1992), amended by the Office of Environmental Assessment, Environmental Planning Division, LR 30:1180 (June 2004).

§748. Maintenance and Repair Restrictions

A. Only a person specifically licensed by the department, the U.S. Nuclear Regulatory Commission, or an agreement state to perform teletherapy unit maintenance and repair shall install, relocate, or remove a teletherapy sealed source, or a teletherapy unit that contains a sealed source, or maintain, adjust, or repair the source drawer, the shutter, or other mechanism of a teletherapy unit that could expose the source, reduce the shielding around the source, or result in increased radiation levels.

B. Except for low dose-rate remote afterloader units, only a person specifically licensed by the department, the U.S. Nuclear Regulatory Commission, or an agreement state shall install, replace, relocate, or remove a sealed source or a source contained in a remote afterloader unit, a teletherapy unit, or a gamma stereotactic radiosurgery unit.

C. For a low dose-rate remote afterloader unit, only a person specifically licensed by the department, the U.S. Nuclear Regulatory Commission, or an agreement state or an authorized medical physicist shall install, replace, relocate, or remove a sealed source contained in the unit.

AUTHORITY NOTE: Promulgated in accordance with R.S. 30:2001 et seq.

HISTORICAL NOTE: Promulgated by the Department of Environmental Quality, Office of Air Quality and Radiation Protection, Radiation Protection Division, LR 18:34 (January 1992), amended by the Office of Environmental Assessment, Environmental Planning Division, LR 26:2590 (November 2000), amended by the Office of Environmental Assessment, Environmental Planning Division, LR 30:1180 (June 2004).

§749. Amendments

A. In addition to the requirements specified in LAC 33:XV.703, a licensee shall apply for and receive a license amendment before:

1. making any change in the treatment room shielding;

2. making any change in the location of the teletherapy unit within the treatment room;

3. using the teletherapy unit in a manner that could result in increased radiation levels in areas outside the teletherapy treatment room;

4. relocating the teletherapy unit; or

5. allowing an individual not listed on the licensee's license to perform the duties of the teletherapy physicist.

AUTHORITY NOTE: Promulgated in accordance with R.S. 30:2001 et seq.

HISTORICAL NOTE: Promulgated by the Department of Environmental Quality, Office of Air Quality and Radiation Protection, Radiation Protection Division, LR 18:34 (January 1992).

§750. Safety Procedures and Instructions for Remote Afterloader Units, Teletherapy Units, and Gamma Stereotactic Radiosurgery Units

A. For remote afterloader units, teletherapy units, and gamma stereotactic radiosurgery units, a licensee shall:

1. secure the unit, the console, the console keys, and the treatment room when not in use or unattended;

2. permit only individuals approved by the authorized user, radiation safety officer, or authorized medical physicist to be present in the treatment room during treatment with the source;

3. prevent dual operation of more than one radiation-producing device in a treatment room, if applicable; and

4. develop, implement, and maintain written procedures for responding to an abnormal situation when the operator is unable to place the source in the shielded position or remove the patient or human research subject from the radiation field with controls from outside the treatment room. These procedures shall include:

a. instructions for responding to equipment failures and the names of the individuals responsible for implementing corrective actions;

b. the process for restricting access to and posting of the treatment area to minimize the risk of inadvertent exposure; and

c. the names and telephone numbers of the authorized users, the authorized medical physicist, and the radiation safety officer to be contacted if the unit or console operates abnormally.

B. A copy of the procedures required by Paragraph A.4 of this Section shall be physically located at the unit console.

C. A licensee shall conspicuously post written instructions at the unit console. These instructions shall inform the operator of:

1. the location of the procedures required by Paragraph A.4 of this Section; and

2. the names and telephone numbers of the authorized users, the authorized medical physicist, and radiation safety officer to be immediately contacted if the unit or console operates abnormally.

D. A licensee shall provide instruction, initially and at least annually, to all individuals who operate the unit, as appropriate to the individual's assigned duties, in:

1. the procedures identified in Paragraph A.4 of this Section; and

2. the operating procedures for the unit.

E. A licensee shall ensure that operators, authorized medical physicists, and authorized users participate in drills of the emergency procedures, initially and at least annually.

F. A licensee shall maintain a record of individuals receiving instruction required by Subsection D of this Section, a description of the instruction, the date of instruction, and the name of the individual who gave the instruction for two years.

G. A licensee shall retain a copy of the procedures required by Paragraph A.4 and D.2 of this Section until the licensee no longer possesses the remote afterloader, teletherapy unit, or gamma stereotactic radiosurgery unit.

AUTHORITY NOTE: Promulgated in accordance with R.S. 30:2001 et seq.

HISTORICAL NOTE: Promulgated by the Department of Environmental Quality, Office of Air Quality and Radiation Protection, Radiation Protection Division, LR 18:34 (January 1992), amended LR 24:2106 (November 1998), amended by the Office of Environmental Assessment, Environmental Planning Division, LR 30:1180 (June 2004).

§751. Safety Precautions for Remote Afterloader Units, Teletherapy Units, and Gamma Stereotactic Radiosurgery Units

A. A licensee shall control access to the treatment room by a door at each entrance.

B. A licensee shall equip each entrance to the treatment room with an electrical interlock system that will:

1. prevent the operator from initiating the treatment cycle unless each treatment room entrance door is closed;

2. cause the source to be shielded when an entrance door is opened; and

3. prevent the source from being exposed following an interlock interruption until all treatment room entrance doors are closed and the source "on-off" control is reset at the console.

C. A licensee shall require any individual entering the treatment room to ensure, through the use of appropriate radiation monitors, that radiation levels have returned to ambient levels.

D. Except for low-dose remote afterloader units, a licensee shall construct or equip each treatment room with viewing and intercom systems to permit continuous observation of the patient or the human research subject from the treatment console during irradiation.

E. For licensed activities where sources are placed within the patient's or human research subject's body, a licensee shall only conduct treatments that allow for expeditious removal of a decoupled or jammed source.

F. In addition to the requirements specified in Subsections A through E of this Section, a licensee shall:

1. for medium dose-rate and pulsed dose-rate remote afterloader units, require:

a. an authorized medical physicist and either an authorized user or a physician, under the supervision of an authorized user, who has been trained in the operation and emergency response for the unit, to be physically present during the initiation of all patient treatments involving the unit; and

b. an authorized medical physicist and either an authorized user or an individual, under the supervision of an authorized user, who has been trained to remove the source applicator in the event of an emergency involving the unit, to be immediately available during continuation of all patient treatments involving the unit;

2. for high dose-rate remote afterloader units, require:

a. an authorized medical physicist and an authorized user to be physically present during the initiation of all patient treatments involving the unit; and

b. an authorized medical physicist and either an authorized user or a physician, under the supervision of an authorized user, who has been trained in the operation and emergency response for the unit, to be physically present during continuation of all patient treatments involving the unit;

3. for gamma stereotactic radiosurgery units, require an authorized medical physicist and an authorized user to be physically present throughout all patient treatments involving the unit;

4. notify the radiation safety officer, or his/her designee, and an authorized user as soon as possible if the patient or human research subject has a medical emergency or dies.

G. A licensee shall have applicable emergency response equipment available near each treatment room to respond to a source:

1. remaining in the unshielded position; or

2. lodged within the patient following completion of the treatment.

AUTHORITY NOTE: Promulgated in accordance with R.S. 30:2001 et seq.
HISTORICAL NOTE: Promulgated by the Department of Environmental Quality, Office of Air Quality and Radiation Protection, Radiation Protection Division, LR 18:34 (January 1992), amended by the Office of Environmental Assessment, Environmental Planning Division, LR 30:1181 (June 2004).

§752. Possession of Survey Instrument

A. A licensee authorized to use radioactive material in a teletherapy unit shall possess either a portable radiation detection survey instrument capable of detecting dose rates over the range of 0.1 milliroentgen per hour to 50 milliroentgens per hour or a portable radiation measurement survey instrument capable of measuring dose rates over the range of 1 milliroentgen per hour to 1,000 milliroentgens per hour. The instruments shall be operable and calibrated in accordance with LAC 33:XV.716.

AUTHORITY NOTE: Promulgated in accordance with R.S. 30:2001 et seq.
HISTORICAL NOTE: Promulgated by the Department of Environmental Quality, Office of Air Quality and Radiation Protection, Radiation Protection Division, LR 18:34 (January 1992).

§753. Radiation Monitoring Device

A. A licensee shall have in each teletherapy room a permanent radiation monitor capable of continuously monitoring beam status.

B. Each radiation monitor shall be capable of providing visible notice of a teletherapy unit malfunction that results in an exposed or partially exposed source. The visible indicator of high radiation levels shall be observable by an individual entering the teletherapy room.

C. Each radiation monitor shall be equipped with a backup power supply separate from the power supply to the teletherapy unit. This backup power supply may be a battery system.

D. A radiation monitor shall be checked with a dedicated check source for proper operation each day before the teletherapy unit is used for treatment of patients or human research subjects.

E. A licensee shall maintain a record of the check required by LAC 33:XV.753.D for two years. The record shall include the date of the check, notation that the monitor indicates when the source is exposed, and the initials of the individual who performed the check.

F. If a radiation monitor is inoperable, the licensee shall require any individual entering the teletherapy room to use a survey instrument or audible alarm personal dosimeter to monitor for any malfunction of the source exposure mechanism. The instrument or dosimeter shall be checked with a dedicated check source for proper operation at the beginning of each day of use. The licensee shall keep a record as described in LAC 33:XV.753.E.

G. A licensee shall promptly repair or replace the radiation monitor if it is inoperable.

AUTHORITY NOTE: Promulgated in accordance with R.S. 30:2001 et seq.
HISTORICAL NOTE: Promulgated by the Department of Environmental Quality, Office of Air Quality and Radiation Protection, Radiation Protection Division, LR 18:34 (January 1992), amended LR 24:2106 (November 1998).

§754. Viewing System

A. A licensee shall construct or equip each teletherapy room to permit continuous observation of the patient or human research subject from the teletherapy unit console during irradiation.

AUTHORITY NOTE: Promulgated in accordance with R.S. 30:2001 et seq.
HISTORICAL NOTE: Promulgated by the Department of Environmental Quality, Office of Air Quality and Radiation Protection, Radiation Protection Division, LR 18:34 (January 1992), amended LR 24:2106 (November 1998).

§755. Dosimetry Equipment and Therapy-Related Computer Systems

A. A licensee shall have a calibrated dosimetry system available for use. To satisfy this requirement, one of the following two conditions shall be met.

1. The system shall have been calibrated by the National Institute of Standards and Technology or by a calibration laboratory accredited by the American Association of Physicists in Medicine. The calibration shall have been performed within the previous two years and after any servicing that may have affected system calibration.

2. The system shall have been calibrated within the previous 4 years; 18 to 30 months after that calibration, the system shall have been intercompared at an intercomparison meeting with another dosimetry system that was calibrated within the past 24 months by the National Institute of Standards and Technology or by a calibration laboratory accredited by the American Association of Physicists in Medicine. The results of the intercomparison meeting shall have indicated that the calibration factor of the licensee's system had not changed by more than 2 percent. The licensee shall not use the intercomparison result to change the calibration factor. When intercomparing dosimetry systems to be used for calibrating sealed sources for therapeutic units, the licensee shall use a comparable unit with beam attenuators or collimators, as applicable, and sources of the same radionuclide as the source used at the licensee's facility.

B. The licensee shall have available for use a dosimetry system for spot-check measurements. To meet this requirement, the system may be compared with a system that has been calibrated in accordance with Subsection A of this Section. This comparison shall have been performed within

the previous year and after each servicing that may have affected system calibration. The spot-check system may be the same system used to meet the requirement in Subsection A of this Section.

C. The licensee shall maintain a record of each calibration, intercomparison, and comparison for the duration of the license. For each calibration, intercomparison, or comparison, the record shall include:

1. the date;

2. the model numbers and serial numbers of the instruments that were calibrated, intercompared, or compared, as required by Subsections A and B of this Section;

3. the correction factors that were determined;

4. the names of the individuals who performed the calibration, intercomparison, or comparison; and

5. evidence that the intercomparison meeting was sanctioned by a calibration laboratory or radiologic physics center accredited by the American Association of Physicists in Medicine.

D. The licensee shall perform acceptance testing on the treatment planning system of a therapy-related computer system in accordance with published protocols accepted by nationally-recognized bodies. At a minimum, the acceptance testing shall include, as applicable, verification of:

1. the source-specific input parameters required by the dose calculation algorithm;

2. the accuracy of dose, dwell time, and treatment time calculations at representative points;

3. the accuracy of isodose plots and graphic displays;

4. the accuracy of the software used to determine sealed source positions from radiographic images; and

5. the accuracy of electronic transfer of the treatment delivery parameters to the treatment delivery unit from the treatment planning system.

AUTHORITY NOTE: Promulgated in accordance with R.S. 30:2001 et seq.

HISTORICAL NOTE: Promulgated by the Department of Environmental Quality, Office of Air Quality and Radiation Protection, Radiation Protection Division, LR 18:34 (January 1992), amended by the Office of Environmental Assessment, Environmental Planning Division, LR 30:1181 (June 2004), amended by the Office of the Secretary, Legal Affairs Division, LR 32:814 (May 2006).

§756. Full Calibration Measurements on Teletherapy Units, Remote Afterloader Units, and Gamma Stereotactic Radiosurgery Units

A. Full Calibration Measurements on Teletherapy Units

1. A licensee authorized to use a teletherapy unit for medical use shall perform full calibration measurements on each teletherapy unit:

a. before the first medical use of the unit;

b. before medical use under the following conditions:

i. whenever spot-check measurements indicate that the output differs by more than 5 percent from the output obtained at the last full calibration corrected mathematically for radioactive decay;

ii. following replacement of the source or following reinstallation of the teletherapy unit in a new location; and

iii. following any repair of the teletherapy unit that includes removal of the source or major repair of the components associated with the source exposure assembly; and

c. at intervals not exceeding one year.

2. To satisfy the requirement of Paragraph A.1 of this Section, full calibration measurements shall include determination of:

a. the output within 3 percent for the range of field sizes and for the distance or range of distances used for medical use;

b. the coincidence of the radiation field and the field indicated by the light beam localizing device;

c. the uniformity of the radiation field and its dependence on the orientation of the useful beam;

d. timer accuracy, constancy, and linearity;

e. "on-off" error; and

f. the accuracy of all distance measuring and localization devices in medical use.

3. A licensee shall use the dosimetry system described in LAC 33:XV.755 to measure the output for one set of exposure conditions. The remaining radiation measurements required in Subparagraph A.2.a of this Section may then be made using a dosimetry system that indicates relative dose rates.

4. A licensee shall make full calibration measurements required by Paragraph A.1 of this Section in accordance with the procedures recommended by Task Group 21 of the Radiation Therapy Committee of the American Association of Physicists in Medicine that are described in *Medical Physics*, vol. 10, number 6, 1983, pp. 741-771, and vol. 11, number 2, 1984, p. 213.

5. A licensee shall correct mathematically the outputs determined in Subparagraph A.2.a of this Section for physical decay for intervals not exceeding one month for cobalt-60 and intervals not exceeding six months for cesium-137.

6. Full calibration measurements required by Paragraph A.1 of this Section and physical decay corrections required by Paragraph A.5 of this Section shall be performed by a teletherapy physicist named on the licensee's license or authorized by a license issued by the U.S. Nuclear

Regulatory Commission or an agreement state to perform such services.

7. A licensee shall retain a record of each calibration in accordance with Subsection D of this Section.

B. Full Calibration Measurements on Remote Afterloader Units

1. A licensee authorized to use a remote afterloader unit for medical use shall perform full calibration measurements on each unit:

a. before the first medical use of the unit;

b. before medical use under the following conditions:

i. following replacement of the source or following reinstallation of the unit in a new location outside the facility; and

ii. following any repair of the unit that includes removal of the source or major repair of the components associated with the source exposure assembly;

c. at intervals not exceeding one quarter for high dose-rate, medium dose-rate, and pulsed dose-rate remote afterloader units with sources whose half-life exceeds 75 days; and

d. at intervals not exceeding one year for low dose-rate remote afterloader units.

2. To satisfy the requirement of Paragraph B.1 of this Section, full calibration measurements shall include, as applicable, determination of:

a. the output within 5 percent;

b. source positioning accuracy to within 1 millimeter;

c. source retraction with backup battery upon power failure;

d. length of the source transfer tubes;

e. timer accuracy and linearity over the typical range of use;

f. length of the applicators; and

g. function of the source transfer tubes, applicators, and transfer tube-applicator interfaces.

3. A licensee shall use the dosimetry system described in LAC 33:XV.755.A to measure the output.

4. A licensee shall make the full calibration measurements required by this Subsection in accordance with published protocols accepted by nationally-recognized bodies.

5. In addition to the requirements for full calibrations for low dose-rate remote afterloader units in Paragraph B.2 of this Section, a licensee shall perform an autoradiograph of the sources to verify inventory and source arrangement at intervals not exceeding one quarter.

6. For low dose-rate remote afterloader units, a licensee may use measurements provided by the source manufacturer that are made in accordance with Paragraphs B.1-5 of this Section.

7. A licensee shall mathematically correct the output determined in Subparagraph B.2.a of this Section for physical decay at intervals consistent with 1 percent physical decay.

8. Full calibration measurements required by Paragraph B.1 of this Section and physical decay corrections required by Paragraph B.7 of this Section shall be performed by the authorized medical physicist.

9. A licensee shall retain a record of each calibration in accordance with Subsection D of this Section.

C. Full Calibration Measurements on Gamma Stereotactic Radiosurgery Units

1. A licensee authorized to use a gamma stereotactic radiosurgery unit for medical use shall perform full calibration measurements on each unit:

a. before the first medical use of the unit;

b. before medical use under the following conditions:

i. whenever spot-check measurements indicate that the output differs by more than 5 percent from the output obtained at the last full calibration corrected mathematically for radioactive decay;

ii. following replacement of the sources or following reinstallation of the gamma stereotactic radiosurgery unit in a new location; and

iii. following any repair of the gamma stereotactic radiosurgery unit that includes removal of the sources or major repair of the components associated with the source assembly; and

c. at intervals not exceeding one year, with the exception that relative helmet factors need only be determined before the first medical use of a helmet and following any damage to a helmet.

2. To satisfy the requirement of Paragraph C.1 of this Section, full calibration measurements shall include determination of:

a. the output within 3 percent;

b. relative helmet factors;

c. isocenter coincidence;

d. timer accuracy and linearity over the range of use;

e. “on-off” error;

f. trunnion centricity;

g. proper functioning of treatment table retraction mechanism, using backup battery power or hydraulic backups with the unit off;

h. proper functioning of helmet microswitches;

i. proper functioning of emergency timing circuits; and

j. proper functioning of stereotactic frames and localizing devices (trunnions).

3. A licensee shall use the dosimetry system described in LAC 33:XV.755.A to measure the output for one set of exposure conditions. The remaining radiation measurements required in Subparagraph C.2.a of this Section may be made using a dosimetry system that indicates relative dose rates.

4. A licensee shall make the full calibration measurements required by Paragraph C.1 of this Section in accordance with published protocols accepted by nationally-recognized bodies.

5. A licensee shall mathematically correct the outputs determined in Subparagraph C.2.a of this Section at intervals not exceeding one month for cobalt-60 and at intervals consistent with 1 percent physical decay for all other radionuclides.

6. Full calibration measurements required by Paragraph C.1 of this Section and physical decay corrections required by Paragraph C.5 of this Section shall be performed by the authorized medical physicist.

7. A licensee shall retain a record of each calibration in accordance with Subsection D of this Section.

D. Records of Teletherapy Unit, Remote Afterloader Unit, and Gamma Stereotactic Radiosurgery Unit Full Calibrations. A licensee shall maintain a record of the teletherapy unit, remote afterloader unit, and gamma stereotactic radiosurgery unit full calibrations required by Subsections A, B, and C of this Section for three years. The record shall include:

1. the date of the calibration;

2. the manufacturer's name, model number, and serial number of the teletherapy, remote afterloader, or gamma stereotactic radiosurgery unit, the source, and the instruments used to calibrate the unit;

3. the results and an assessment of the full calibrations;

4. the results of the autoradiograph required for low dose-rate remote afterloader units; and

5. the signature of the authorized medical physicist who performed the full calibration.

AUTHORITY NOTE: Promulgated in accordance with R.S. 30:2001 et seq.

HISTORICAL NOTE: Promulgated by the Department of Environmental Quality, Office of Air Quality and Radiation Protection, Radiation Protection Division, LR 18:34 (January 1992), amended by the Office of Environmental Assessment, Environmental Planning Division, LR 30:1182 (June 2004), amended by the Office of Environmental Assessment, LR 31:54 (January 2005).

§757. Periodic Spot-Checks

A. Periodic Spot-Checks for Teletherapy Units

1. A licensee authorized to use teletherapy units for medical use shall perform output spot-checks on each teletherapy unit at intervals not to exceed one month.

2. To satisfy the requirement of Paragraph A.1 of this Section, spot-checks shall include determination of:

a. timer accuracy and timer linearity over the range of use;

b. "on-off" error;

c. the coincidence of the radiation field and the field indicated by the light-beam localizing device;

d. the accuracy of all distance-measuring and localization devices used for medical use;

e. the output for one typical set of operating conditions; and

f. the difference between the measurement made in Subparagraph A.2.e of this Section and the anticipated output, expressed as a percentage of the anticipated output (i.e., the value obtained at last full calibration corrected mathematically for physical decay).

3. A licensee shall use the dosimetry system described in LAC 33:XV.755 to make the spot-check required in Subparagraph A.2.e of this Section.

4. A licensee shall perform spot-checks required by Paragraph A.1 of this Section in accordance with procedures established by the authorized medical physicist. The authorized medical physicist does not need to actually perform the output spot-check measurements.

5. A licensee shall have the authorized medical physicist review the results of each output spot-check within 15 days. The authorized medical physicist shall promptly notify the licensee in writing of the results of each output spot-check. The licensee shall keep a copy of each written notification for two years.

6. A licensee authorized to use a teletherapy unit for medical use shall perform safety spot-checks of each teletherapy facility at intervals not to exceed one month.

7. To satisfy the requirement of Paragraph A.6 of this Section, safety spot-checks shall ensure proper operation of:

a. electrical interlocks at each teletherapy room entrance;

b. electrical or mechanical stops installed for the purpose of limiting use of the primary beam of radiation, restricting source housing angulation or elevation and carriage or stand travel, and operating the beam "on-off" mechanism;

c. beam condition indicator lights on the teletherapy unit, on the control console, and in the facility;

d. viewing systems;

e. treatment room doors from inside and outside the treatment room; and

f. electrically-assisted treatment room doors with the teletherapy unit electrical power turned "off."

8. A licensee shall lock the control console in the "off" position if any door interlock malfunctions. No licensee shall use the unit until the interlock system is repaired unless specifically authorized to do so in writing by the department.

9. A licensee shall promptly repair any system identified in Paragraph A.7 of this Section that is not operating properly. The teletherapy unit shall not be used until all repairs are completed.

10. A licensee shall maintain a record of each spot-check required by Paragraphs A.1 and 6 of this Section for two years. The record shall include the date of the spot-check; the manufacturer's name, model number, and serial number for both the teletherapy unit and source; the manufacturer's name, model number, and serial number of the instrument used to measure the output of the teletherapy unit; the timer accuracy and linearity; the calculated "on-off" error; a determination of the coincidence of the radiation field and the field indicated by the light beam localizing device; the timer accuracy and linearity for a typical treatment time; the calculated "on-off" error; the estimated accuracy of each distance-measuring or localization device; the difference between the anticipated output and the measured output; notations indicating the operability of each entrance door electrical interlock, each electrical or mechanical stop, each beam condition indicator light, the viewing system, and doors; and the signature of the individual who performed the periodic spot-check.

B. Periodic Spot-Checks for Remote Afterloader Units

1. A licensee authorized to use a remote afterloader unit for medical use shall perform spot-checks of each remote afterloader facility and on each unit:

a. before the first use of a high dose-rate, medium dose-rate, or pulsed dose-rate remote afterloader unit on a given day;

b. before each patient treatment with a low dose-rate remote afterloader unit; and

c. after each source installation.

2. A licensee shall perform the measurements required by Paragraph B.1 of this Section in accordance with written procedures established by the authorized medical physicist. The authorized medical physicist need not actually perform the spot-check measurements.

3. A licensee shall have the authorized medical physicist review the results of each spot-check within 15 days. The authorized medical physicist shall notify the licensee as soon as possible in writing of the results of each spot-check.

4. To satisfy the requirements of Paragraph B.1 of this Section, spot-checks shall, at a minimum, ensure proper operation of:

a. electrical interlocks at each remote afterloader unit room entrance;

b. source exposure indicator lights on the remote afterloader unit, on the control console, and in the facility;

c. viewing and intercom systems in each high dose-rate, medium dose-rate, and pulsed dose-rate remote afterloader facility;

d. emergency response equipment;

e. radiation monitors used to indicate the source position;

f. timer accuracy;

g clock (date and time) in the unit's computer; and

h. decayed source activity in the unit's computer.

5. If the results of the checks required in Paragraph B.4 of this Section indicate the malfunction of any system, a licensee shall lock the control console in the “off” position and not use the unit except as may be necessary to repair, replace, or check the malfunctioning system.

6. A licensee shall retain a record of each check required by Paragraph B.4 of this Section and a copy of the procedures required by Paragraph B.2 of this Section for three years. The records shall include:

a. the date of the spot-check;

b. the manufacturer's name, model number, and serial number for the remote afterloader unit and source;

c. an assessment of timer accuracy;

d. notations indicating the operability of entrance door electrical interlocks, radiation monitors, source exposure indicator lights, viewing and intercom systems, and clock and decayed source activity in the unit's computer; and

e. the name of the individual who performed the periodic spot-check and the signature of the authorized medical physicist who reviewed the record of the spot-check.

7. A licensee shall retain a copy of the procedures required by Paragraph B.6 of this Section until the licensee no longer possesses the remote afterloader unit.

C. Periodic Spot-Checks for Gamma Stereotactic Radiosurgery Units

1. A licensee authorized to use a gamma stereotactic radiosurgery unit for medical use shall perform spot-checks of each gamma stereotactic radiosurgery facility and on each unit:

a. monthly;

b. before the first use of the unit on a given day; and

c. after each source installation.

2. A licensee shall:

a. perform the measurements required by Paragraph C.1 of this Section in accordance with written procedures established by the authorized medical physicist; and

b. have the authorized medical physicist review the results of each spot-check within 15 days. The authorized medical physicist shall notify the licensee as soon as possible in writing of the results of each spot-check.

3. To satisfy the requirements of Subparagraph C.1.a of this Section, spot-checks shall, at a minimum:

a. ensure proper operation of:

i. treatment table retraction mechanisms, using backup battery power or hydraulic backups with the unit off;

ii. helmet microswitches;

iii. emergency timing circuits; and

iv. stereotactic frames and localizing devices (trunnions);

b. determine:

i. the output for one typical set of operating conditions measured with the dosimetry system described in LAC 33:XV.755.B;

ii. the difference between the measurement made in accordance with Clause C.3.b.i of this Section and the anticipated output, expressed as a percentage of the anticipated output (i.e., the value obtained at last full calibration corrected mathematically for physical decay);

iii. the degree of agreement between source output and computer calculation;

iv. timer accuracy and linearity over the range of use;

v. "on-off" error; and

vi. trunnion centricity.

4. To satisfy the requirements of Subparagraphs C.1.b and c of this Section, spot-checks shall ensure proper operation of:

a. electrical interlocks at each gamma stereotactic radiosurgery room entrance;

b. source exposure indicator lights on the gamma stereotactic radiosurgery unit, on the control console, and in the facility;

c. viewing and intercom systems;

d. timer termination;

e. radiation monitors used to indicate room exposures; and

f. emergency "off" buttons.

5. A licensee shall arrange for the repair of any system identified in Paragraph C.3 of this Section that is not operating properly as soon as possible.

6. If the results of the checks required in Paragraph C.4 of this Section indicate the malfunction of any system, a licensee shall lock the control console in the "off" position and not use the unit except as may be necessary to repair, replace, or check the malfunctioning system.

7. A licensee shall retain a record of each check required by Paragraphs C.3 and 4 of this Section for three years. The record shall include:

a. the date of the spot-check;

b. the manufacturer's name, model number, and serial number for the gamma stereotactic radiosurgery unit and the instrument used to measure the output of the unit;

c. an assessment of timer linearity and accuracy;

d. the calculated "on-off" error;

e. a determination of trunnion centricity;

f. the difference between the anticipated output and the measured output;

g. an assessment of source output against computer calculations;

h. notations indicating the operability of radiation monitors, helmet microswitches, emergency timing circuits, emergency "off" buttons, electrical interlocks, source exposure indicator lights, viewing and intercom systems, timer termination, treatment table retraction mechanism, and stereotactic frames and localizing devices (trunnions); and

i. the name of the individual who performed the periodic spot-check and the signature of the authorized medical physicist who reviewed the record of the spot-check.

8. A licensee shall retain a copy of the procedures required by Paragraph C.2 of this Section until the licensee no longer possesses the gamma stereotactic radiosurgery unit.

D. Additional Technical Requirements for Mobile Remote Afterloader Units

1. A licensee providing mobile remote afterloader service shall:

a. check survey instruments before medical use at each address of use or on each day of use, whichever is more frequent; and

b. account for all sources before departure from a client's address of use.

2. In addition to the periodic spot-checks required by Subsection B of this Section, a licensee authorized to use mobile remote afterloaders for medical use shall perform checks on each remote afterloader unit before use at each address of use. At a minimum, checks shall be made to verify the operation of:

a. electrical interlocks on treatment area access points;

b. source exposure indicator lights on the remote afterloader unit, on the control console, and in the facility;

c. viewing and intercom systems;

d. applicators, source transfer tubes, and transfer tube-applicator interfaces;

e. radiation monitors used to indicate room exposures;

f. source positioning (accuracy); and

g. radiation monitors used to indicate whether the source has returned to a safe shielded position.

3. In addition to the requirements of periodic spot-checks in Paragraph D.2 of this Section, a licensee shall ensure overall proper operation of the remote afterloader unit by conducting a simulated cycle of treatment before use at each address of use.

4. If the results of the checks required in Paragraph D.2 of this Section indicate the malfunction of any system, a licensee shall lock the control console in the "off" position and not use the unit except as may be necessary to repair, replace, or check the malfunctioning system.

5. A licensee shall retain a record of each check required by Paragraph D.2 of this Section for three years. The record shall include:

a. the date of the check;

b. the manufacturer's name, model number, and serial number of the remote afterloader unit;

c. notations accounting for all sources before the licensee departs from a facility;

d. notations indicating the operability of entrance door electrical interlocks, radiation monitors, source exposure indicator lights, viewing and intercom system, applicators, source transfer tubes, and transfer tube applicator interfaces, and source positioning accuracy; and

e. the signature of the individual who performed the check.

AUTHORITY NOTE: Promulgated in accordance with R.S. 30:2001 et seq.

HISTORICAL NOTE: Promulgated by the Department of Environmental Quality, Office of Air Quality and Radiation Protection, Radiation Protection Division, LR 18:34 (January 1992), amended by the Office of Environmental Assessment, Environmental Planning Division, LR 26:2590 (November 2000), LR 30:1183 (June 2004), amended by the Office of Environmental Assessment, LR 31:54 (January 2005), amended by the Office of the Secretary, Legal Affairs Division, LR 32:814 (May 2006).

§758. Radiation Surveys

A. A person licensed under this Chapter shall make surveys to ensure that the maximum radiation levels and average radiation levels from the surface of the main source safe with the source in the shielded position do not exceed the levels stated in the Sealed Source and Device Registry.

B. The licensee shall make the survey required by Subsection A of this Section at installation of a new source and following repairs to the source shielding, the source driving unit, or other electronic or mechanical component that could expose the source, reduce the shielding around the source, or compromise the radiation safety of the unit or the source.

C. A licensee shall maintain a record of radiation surveys of treatment units made in accordance with Subsections A and B of this Section for the duration of use of the unit. The record shall include:

1. the date of the measurements;

2. the manufacturer's name, model number, and serial number of the treatment unit, the source, and the instrument used to measure radiation levels;

3. each dose rate measured around the source while the unit is in the "off" position and the average of all measurements; and

4. the signature of the individual who performed the test.

AUTHORITY NOTE: Promulgated in accordance with R.S. 30:2001 et seq.

HISTORICAL NOTE: Promulgated by the Department of Environmental Quality, Office of Air Quality and Radiation Protection, Radiation Protection Division, LR 18:34 (January 1992), amended by the Office of Environmental Assessment, Environmental Planning Division, LR 26:2590 (November 2000), LR 30:1186 (June 2004).

§759. Safety Spot-Checks for Teletherapy Facilities

A. A licensee shall promptly check all systems listed in LAC 33:XV.757.A.7 for proper function after each installation of a teletherapy source and after making any change for which an amendment is required by LAC 33:XV.749.

B. If the results of the safety spot-checks required in Subsection A of this Section indicate the malfunction of any system specified in LAC 33:XV.757, the licensee shall lock the control console in the "off" position and not use the unit except as may be necessary to repair, replace, or check the malfunctioning system.

C. A licensee shall maintain a record of the safety spot-checks following installation of a source for two years. The record shall include notations indicating the operability of each entrance door interlock, each electrical or mechanical stop, each beam condition indicator light, the viewing system, doors, and the signature of the radiation safety officer.

AUTHORITY NOTE: Promulgated in accordance with R.S. 30:2001 et seq.

HISTORICAL NOTE: Promulgated by the Department of Environmental Quality, Office of Air Quality and Radiation Protection, Radiation Protection Division, LR 18:34 (January 1992), amended by the Office of Environmental Assessment, Environmental Planning Division, LR 30:1186 (June 2004).

§760. Modification of Teletherapy Unit or Room before Beginning a Treatment Program

A. If the survey required by LAC 33:XV.758 indicates that an individual in an unrestricted area may be exposed to levels of radiation greater than those permitted by LAC 33:XV.421.A, before beginning the treatment program the licensee shall:

1. either equip the unit with stops or add additional radiation shielding to ensure compliance with LAC 33:XV.421.A;

2. perform the survey required by LAC 33:XV.758 again; and

3. include in the report required by LAC 33:XV.761 the results of the initial survey, a description of the modification made to comply with LAC 33:XV.760.A.1, and the results of the second survey; or

4. request and receive a license amendment under LAC 33:XV.421.C that authorizes radiation levels in unrestricted areas greater than those permitted by LAC 33:XV.421.A.

AUTHORITY NOTE: Promulgated in accordance with R.S. 30:2001 et seq.
HISTORICAL NOTE: Promulgated by the Department of Environmental Quality, Office of Air Quality and Radiation Protection, Radiation Protection Division, LR 18:34 (January 1992).

§761. Reports of Teletherapy Surveys, Checks, Tests, and Measurements

A. A licensee shall furnish a copy of the records required in LAC 33:XV.758, 759, and 760, and the output from the teletherapy source expressed as rems (sieverts) per hour at 1 meter from the source as determined during the full calibration required in LAC 33:XV.756 to the Office of Environmental Compliance, Emergency and Radiological Services Division, within 30 days following completion of the action that initiated the record requirement.

AUTHORITY NOTE: Promulgated in accordance with R.S. 30:2001 et seq.
HISTORICAL NOTE: Promulgated by the Department of Environmental Quality, Office of Air Quality and Radiation Protection, Radiation Protection Division, LR 18:34 (January 1992), amended by the Office of Environmental Assessment, Environmental Planning Division, LR 26:2590 (November 2000), amended by the Office of the Secretary, Legal Affairs Division, LR 31:2533 (October 2005).

§762. Five-Year Inspection

A. A licensee shall have each teletherapy unit and gamma stereotactic radiosurgery unit fully inspected and serviced during source replacement or at intervals not to exceed five years, whichever comes first, to ensure proper functioning of the source exposure mechanism.

B. This inspection and servicing shall be performed only by persons specifically licensed to do so by the department, an agreement state, or the U.S. Nuclear Regulatory Commission.

C. A licensee shall maintain a record of the inspection and servicing for the duration of the license. The record shall contain the inspector's name, the inspector's license number, the date of inspection, the manufacturer's name and model number and serial number for both the teletherapy unit and source, a list of components inspected, a list of components serviced and the type of service, a list of components replaced, and the signature of the inspector.

AUTHORITY NOTE: Promulgated in accordance with R.S. 30:2001 et seq.
HISTORICAL NOTE: Promulgated by the Department of Environmental Quality, Office of Air Quality and Radiation Protection, Radiation Protection Division, LR 18:34 (January 1992), amended by the Office of Environmental Assessment, Environmental Planning Division, LR 26:2590 (November 2000), LR 30:1186 (June 2004).

§763. Training

A. Radiation Safety Officer. Except as provided in Subsection B of this Section, an individual fulfilling the responsibilities of the radiation safety officer as provided in LAC 33:XV.706 shall:

1. be certified by the:

a. American Board of Health Physics in Comprehensive Health Physics;

b. American Board of Radiology in Radiological Physics, Therapeutic Radiological Physics, or Medical Nuclear Physics;

c. American Board of Nuclear Medicine;

d. American Board of Science in Nuclear Medicine;

e. Board of Pharmaceutical Specialties in Nuclear Pharmacy;

f. American Board of Medical Physics in Radiation Oncology Physics;

g. Royal College of Physicians and Surgeons of Canada in Nuclear Medicine;

h. American Osteopathic Board of Radiology; or

i. American Osteopathic Board of Nuclear Medicine; or

2. have had 200 hours of classroom and laboratory training as follows:

a. radiation physics and instrumentation;

b. radiation protection;

c. mathematics pertaining to the use and measurement of radioactivity;

d. radiation biology;

e. radiopharmaceutical chemistry; and

f. one year of full-time experience in radiation safety at a medical institution under the supervision of the individual identified as the radiation safety officer on a department, agreement state, licensing state, or Nuclear

Regulatory Commission license that authorizes the medical use of radioactive material; or

3. be an authorized user for those radioactive material uses that come within the radiation safety officer's responsibilities.

B. Experienced Radiation Safety Officer. An individual identified as a radiation safety officer on a department, agreement state, licensing state, or Nuclear Regulatory Commission license on February 20, 1991, who oversees only the use of radioactive material for which the licensee was authorized on that date need not comply with the training requirements of Subsection A of this Section.

C. Uptake, Dilution, or Excretion Studies. Except as provided in Subsections M and N of this Section, the licensee shall require the authorized user of a radiopharmaceutical listed in LAC 33:XV.729 to be a physician who:

1. is certified in:

a. nuclear medicine by the American Board of Nuclear Medicine;

b. diagnostic radiology by the American Board of Radiology;

c. diagnostic radiology or radiology within the previous five years by the American Osteopathic Board of Radiology;

d. nuclear medicine by the American Osteopathic Board of Nuclear Medicine; or

e. nuclear medicine by the Royal College of Physicians and Surgeons of Canada; or

2. has completed 40 hours of instruction in basic radionuclide handling techniques applicable to the use of prepared radiopharmaceuticals, and 20 hours of supervised clinical experience:

a. to satisfy the basic instruction requirement, 40 hours of classroom and laboratory instruction shall include:

i. radiation physics and instrumentation;

ii. radiation protection;

iii. mathematics pertaining to the use and measurement of radioactivity;

iv. radiation biology; and

v. radiopharmaceutical chemistry;

b. to satisfy the requirement for 20 hours of supervised clinical experience, training shall be under the supervision of an authorized user at a medical institution and shall include:

i. examining patients or human research subjects and reviewing their case histories to determine their suitability for radionuclide diagnosis, limitations, or contraindications;

ii. selecting the suitable radiopharmaceuticals and calculating and measuring the dosages;

iii. administering dosages to patients or human research subjects and using syringe radiation shields;

iv. collaborating with the authorized user in the interpretation of radionuclide test results; and

v. patient or human research subject follow-up; or

3. has successfully completed a six-month training program in nuclear medicine as part of a training program that has been approved by the Accreditation Council for Graduate Medical Education and that included classroom and laboratory training, work experience, and supervised clinical experience in all the topics identified in Subparagraph C.2.b of this Section.

D. Imaging and Localization Studies. Except as provided in Subsections M and N of this Section, the licensee shall require the authorized user of a radiopharmaceutical, generator, or reagent kit specified in LAC 33:XV.731 to be a physician who:

1. is certified in:

a. nuclear medicine by the American Board of Nuclear Medicine;

b. diagnostic radiology by the American Board of Radiology;

c. diagnostic radiology or radiology within the previous five years by the American Osteopathic Board of Radiology;

d. nuclear medicine by the American Osteopathic Board of Nuclear Medicine; or

e. nuclear medicine by the Royal College of Physicians and Surgeons of Canada; or

2. has completed 200 hours of instruction in basic radionuclide handling techniques applicable to the use of prepared radiopharmaceuticals, generators, and reagent kits; 500 hours of supervised work experience; and 500 hours of supervised clinical experience:

a. to satisfy the basic instruction requirement, 200 hours of classroom and laboratory training shall include:

i. radiation physics and instrumentation;

ii. radiation protection;

iii. mathematics pertaining to the use and measurement of radioactivity;

iv. radiopharmaceutical chemistry;

v. radiation biology; and

vi. certification by the physician that he or she participated in the required number of hours and has successfully passed an appropriate written examination given by the certifying institution;

b. to satisfy the requirement for 500 hours of supervised work experience, training shall be under the supervision of an authorized user at a medical institution and shall include:

i. ordering, receiving, and unpacking radioactive materials safely and performing the related radiation surveys;

ii. calibrating dose calibrators and diagnostic instruments and performing checks for proper operation of survey meters;

iii. calculating and safely preparing patient or human research subject dosages;

iv. using administrative controls to prevent a medical event involving the use of unsealed radioactive material;

v. using emergency procedures to contain spilled radioactive material safely and using proper decontamination procedures; and

vi. eluting technetium-99m from generator systems, assaying and testing the eluate for molybdenum-99 and alumina contamination, and processing the eluate with reagent kits to prepare technetium-99m labeled radio-pharmaceuticals;

c. to satisfy the requirement for 500 hours of supervised clinical experience, training shall be under the supervision of an authorized user at a medical institution and shall include:

i. examining patients or human research subjects and reviewing their case histories to determine their suitability for radionuclide diagnosis, limitations, or contraindications;

ii. selecting the suitable radiopharmaceuticals and calculating and measuring the dosages;

iii. administering dosages to patients or human research subjects and using syringe radiation shields;

iv. collaborating with the authorized user in the interpretation of radionuclide test results; and

v. patient or human research subject follow-up; or

3. has successfully completed a six-month training program in nuclear medicine that has been approved by the Accreditation Council for Graduate Medical Education and that included classroom and laboratory training, work experience, and supervised clinical experience in all the topics identified in Paragraph D.2 of this Section.

E. Therapeutic Use of Radiopharmaceuticals. Except as provided in Subsection M of this Section, the licensee shall require the authorized user of a radiopharmaceutical listed in LAC 33:XV.735 for therapy to be a physician who:

1. is certified by:

a. the American Board of Nuclear Medicine;

b. the American Board of Radiology in radiology, therapeutic radiology, or radiation oncology;

c. the Royal College of Physicians and Surgeons of Canada in nuclear medicine; or

d. the American Osteopathic Board of Radiology after 1984; or

2. has completed 80 hours of instruction in basic radionuclide handling techniques applicable to the use of therapeutic radiopharmaceuticals and has had supervised clinical experience:

a. to satisfy the requirement for instruction, 80 hours of classroom and laboratory training shall include:

i. radiation physics and instrumentation;

ii. radiation protection;

iii. mathematics pertaining to the use and measurement of radioactivity; and

iv. radiation biology;

b. to satisfy the requirement for supervised clinical experience, training shall be under the supervision of an authorized user at a medical institution and shall include:

i. use of iodine-131 for diagnosis of thyroid function and the treatment of hyperthyroidism or cardiac dysfunction in 10 individuals;

ii. use of soluble phosphorus-32 for the treatment of ascites, polycythemia vera, leukemia, or bone metastases in three individuals;

iii. use of iodine-131 for treatment of thyroid carcinoma in three individuals; and

iv. use of colloidal chromic phosphorus-32 or of colloidal gold-198 for intracavitary treatment of malignant effusions in three individuals.

F. Therapeutic Use of Brachytherapy Sources. Except as provided in Subsection M of this Section, the licensee shall require the authorized user using a brachytherapy source specified in LAC 33:XV.741 for therapy to be a physician who:

1. is certified in:

a. radiology, therapeutic radiology, or radiation oncology by the American Board of Radiology;

b. radiation oncology by the American Osteopathic Board of Radiology;

c. radiology, with a specialization in radiotherapy, as a British "Fellow of the Faculty of Radiology" or "Fellow of the Royal College of Radiology"; or

d. therapeutic radiology by the Canadian Royal College of Physicians and Surgeons; or

2. is in the active practice of therapeutic radiology, has completed 200 hours of instruction in basic radionuclide handling techniques applicable to the therapeutic use of

brachytherapy sources and 500 hours of supervised work experience and a minimum of three years of supervised clinical experience:

a. to satisfy the requirement for instruction, 200 hours of classroom and laboratory training shall include:

i. radiation physics and instrumentation;

ii. radiation protection;

iii. mathematics pertaining to the use and measurement of radioactivity; and

iv. radiation biology;

b. to satisfy the requirement for 500 hours of supervised work experience, training shall be under the supervision of an authorized user at a medical institution and shall include:

i. ordering, receiving, and unpacking radioactive materials safely and performing the related radiation surveys;

ii. checking survey meters for proper operation;

iii. preparing, implanting, and removing sealed sources;

iv. using administrative controls to prevent a medical event involving the use of radioactive material; and

v. using emergency procedures to control radioactive material;

c. to satisfy the requirement for a period of supervised clinical experience, training shall include one year in a formal training program approved by the Residency Review Committee for Radiology of the Accreditation Council for Graduate Medical Education or the Committee on Postdoctoral Training of the American Osteopathic Association, and an additional two years of clinical experience in therapeutic radiology under the supervision of an authorized user at a medical institution. The supervised clinical experience shall include:

i. examining individuals and reviewing their case histories to determine their suitability for brachytherapy treatment, and any limitations or contraindications;

ii. selecting the proper brachytherapy sources, dose, and method of administration;

iii. calculating the dose; and

iv. post-administration follow-up and review of case histories in collaboration with the authorized user.

G. Ophthalmic Use of Strontium-90. Except as provided in Subsection M of this Section, the licensee shall require the authorized user using only strontium-90 for ophthalmic radiotherapy to be a physician who:

1. is certified in radiology, therapeutic radiology, or radiation oncology by the American Board of Radiology; or

2. is in the active practice of therapeutic radiology or ophthalmology, and has completed 24 hours of instruction in basic radionuclide handling techniques applicable to the use of strontium-90 for ophthalmic radiotherapy, and a period of supervised clinical training in ophthalmic radiotherapy:

a. to satisfy the requirement for instruction, the classroom and laboratory training shall include:

i. radiation physics and instrumentation;

ii. radiation protection;

iii. mathematics pertaining to the use and measurement of radioactivity; and

iv. radiation biology;

b. to satisfy the requirement for a period of supervised clinical training in ophthalmic radiotherapy, training shall be under the supervision of an authorized user at a medical institution and shall include the use of strontium-90 for the ophthalmic treatment of five individuals that includes:

i. examination of each individual to be treated;

ii. calculation of the dose to be administered;

iii. administration of the dose; and

iv. follow-up and review of each individual's case history.

H. Use of Sealed Sources for Diagnosis. Except as provided in Subsection M of this Section, the licensee shall require the authorized user using a sealed source in a device specified in LAC 33:XV.739 to be a physician, dentist, or podiatrist who:

1. is certified in:

a. radiology, diagnostic radiology with special competence in nuclear radiology, therapeutic radiology, or radiation oncology by the American Board of Radiology;

b. nuclear medicine by the American Board of Nuclear Medicine;

c. diagnostic radiology or radiology by the American Osteopathic Board of Radiology; or

d. nuclear medicine by the Royal College of Physicians and Surgeons of Canada; or

2. has completed eight hours of classroom and laboratory instruction in basic radionuclide handling techniques specifically applicable to the use of the device:

a. to satisfy the requirement for instruction, the training shall include:

i. radiation physics, mathematics pertaining to the use and measurement of radioactivity, and instrumentation;

ii. radiation biology; and

iii. radiation protection and training in the use of the device for the purposes authorized by the license.

I. Teletherapy. Except as provided in Subsection M of this Section, the licensee shall require the authorized user of a sealed source specified in LAC 33:XV.747 in a teletherapy unit to be a physician who:

1. is certified in:

a. radiology, therapeutic radiology, or radiation oncology by the American Board of Radiology;

b. radiation oncology by the American Osteopathic Board of Radiology;

c. radiology, with specialization in radiotherapy, as a British "Fellow of the Faculty of Radiology" or "Fellow of the Royal College of Radiology"; or

d. therapeutic radiology by the Canadian Royal College of Physicians and Surgeons; or

2. is in the active practice of therapeutic radiology, and has completed 200 hours of instruction in basic radionuclide techniques applicable to the use of a sealed source in a teletherapy unit, 500 hours of supervised work experience, and a minimum of three years of supervised clinical experience:

a. to satisfy the requirement for instruction, the classroom and laboratory training shall include:

i. radiation physics and instrumentation;

ii. radiation protection;

iii. mathematics pertaining to the use and measurement of radioactivity; and

iv. radiation biology;

b. to satisfy the requirement for supervised work experience, training shall be under the supervision of an authorized user at an institution and shall include:

i. review of the full calibration measurements and periodic spot-checks;

ii. preparing treatment plans and calculating treatment times;

iii. using administrative controls to prevent a medical event involving the use of radioactive material;

iv. implementing emergency procedures to be followed in the event of the abnormal operation of a teletherapy unit or console; and

v. checking and using survey meters;

c. to satisfy the requirement for a period of supervised clinical experience, training shall include one year in a formal training program approved by the Residency Review Committee for Radiology of the Accreditation Council for Graduate Medical Education or the Committee on Postdoctoral Training of the American Osteopathic Association and an additional two years of clinical experience in therapeutic radiology under the supervision of an authorized user at a medical institution. The supervised clinical experience shall include:

i. examining individuals and reviewing their case histories to determine their suitability for teletherapy treatment, and any limitations or contraindications;

ii. selecting the proper dose and how it is to be administered;

iii. calculating the teletherapy doses and collaborating with the authorized user in the review of patients' or human research subjects' progress and consideration of the need to modify originally prescribed doses as warranted by patients' or human research subjects' reactions to radiation; and

iv. post-administration follow-up and review of case histories.

J. Teletherapy Physicist. A teletherapy physicist shall meet the criteria in the definition of *radiological physicist* in LAC 33:XV.Chapter 1.

K. Authorized Nuclear Pharmacist. The licensee shall require the authorized nuclear pharmacist to be a pharmacist who either:

1. has current board certification as a nuclear pharmacist by the Board of Pharmaceutical Specialties; or

2. has obtained written certification, signed by a preceptor authorized nuclear pharmacist, that the individual has achieved a level of competency sufficient to independently operate a nuclear pharmacy and that the individual has completed 700 hours in a structured educational program consisting of both:

a. didactic training in the following areas:

i. radiation physics and instrumentation;

ii. radiation protection;

iii. mathematics pertaining to the use and measurement of radioactivity;

iv. chemistry of byproduct material for medical use; and

v. radiation biology; and

b. supervised experience in a nuclear pharmacy involving the following:

i. shipping, receiving, and performing related radiation surveys;

ii. using and performing checks for proper operation of dose calibrators, survey meters, and if appropriate, instruments used to measure alpha-emitting or beta-emitting radionuclides;

iii. calculating, assaying, and safely preparing dosages for patients or human research subjects;

iv. using administrative controls to avoid mistakes in the administration of byproduct material; and

v. using procedures to prevent or minimize contamination and using proper decontamination procedures.

L. Experienced Nuclear Pharmacists. A licensee may apply for and shall receive a license amendment identifying an experienced nuclear pharmacist as an authorized nuclear pharmacist before it allows this individual to work as an authorized nuclear pharmacist. A pharmacist who has completed a structured educational program, as specified in Subsection K of this Section, before December 2, 1994, and who is working in a nuclear pharmacy would qualify as an experienced nuclear pharmacist. An experienced nuclear pharmacist need not comply with the requirements on preceptor statement, as specified in Subsection K of this Section, and recentness of training, as specified in Subsection O of this Section, to qualify as an authorized nuclear pharmacist.

M. Experienced Authorized Users. Practitioners of the healing arts identified as authorized users for the human use of radioactive material on a department license on February 20, 1991, who perform only those methods of use for which they were authorized on that date need not comply with the training requirements of this Section.

N. Physician Training in a Three-Month Program. A physician who, before July 1, 1984, began a three-month nuclear medicine training program approved by the Accreditation Council for Graduate Medical Education and has successfully completed the program, is exempted from the requirements of Subsection C or D of this Section.

O. Recentness of Training. The training and experience specified in Subsections A-L of this Section shall have been obtained within the seven years preceding the date of application, or the individual shall have had continuing applicable experience since the required training and experience was completed.

AUTHORITY NOTE: Promulgated in accordance with R.S. 30:2001 et seq.

HISTORICAL NOTE: Promulgated by the Department of Environmental Quality, Office of Air Quality and Radiation Protection, Radiation Protection Division, LR 18:34 (January 1992), amended LR 24:2106 (November 1998), amended by the Office of Environmental Assessment, Environmental Planning Division, LR 26:2590 (November 2000), LR 30:1186 (June 2004), amended by the Office of Environmental Assessment, LR 31:1061 (May 2005), amended by the Office of the Secretary, Legal Affairs Division, LR 32:814 (May 2006).

§776. Medical Advisory Committee

A. A medical advisory committee will evaluate applications for all nonroutine uses of radioactive materials in humans and may evaluate the clinical training and experience of physicians seeking licensure by the department. In the event of disapproval by the department, the preceptor and physician seeking licensure shall be given the opportunity to address the department's concerns prior to any proposed disapproval becoming final. This committee contains licensed physicians with medical experience in the use of radioisotopes and radiation. The medical advisory committee will have representatives of diagnostic radiology, therapeutic radiology, internal medicine, pathology, pharmacology, cardiology, nuclear medicine, and medical physics.

AUTHORITY NOTE: Promulgated in accordance with R.S. 30:2001 et seq.

HISTORICAL NOTE: Promulgated by the Department of Environmental Quality, Office of Air Quality and Radiation Protection, Radiation Protection Division, LR 18:34 (January 1992), amended by the Office of Environmental Assessment, Environmental Planning Division, LR 26:2591 (November 2000).

§777. Written Directives

A. A written directive shall be dated and signed by an authorized user before the administration of I-131 sodium iodide greater than 1.11 megabecquerels (MBq) (30 microcuries (μCi)), any therapeutic dosage of radioactive material, or any therapeutic dose of radiation from radioactive material. If, because of the emergent nature of the patient's condition, a delay in order to provide a written directive would jeopardize the patient's health, an oral directive is acceptable. The information contained in the oral directive shall be documented as soon as possible in writing in the patient's record. A written directive shall be prepared within 48 hours of the oral directive.

B. The written directive shall contain the patient's or human research subject's name and the following information:

1. for any administration of quantities greater than 1.11 MBq (30 μCi) of sodium iodide I-131, the dosage;

2. for an administration of a therapeutic dosage of unsealed radioactive material other than sodium iodide I-131:

a. the radioactive drug;

b. the dosage; and

c. the route of administration;

3. for gamma stereotactic radiosurgery:

a. the total dose;

b. the treatment site; and

c. the values for the target coordinate settings per treatment for each anatomically distinct treatment site;

4. for teletherapy:

a. the total dose;

b. the dose per fraction;

c. the number of fractions; and

d. the treatment site;

5. for high dose-rate remote afterloading brachytherapy:

a. the radionuclide;

b. the treatment site;

c. the dose per fraction;

d. the number of fractions; and

e. the total dose; or

6. for all other brachytherapy, including low, medium, and pulsed dose-rate remote afterloaders:

a. before implantation:

i. the treatment site;

ii. the radionuclide; and

iii. the dose; and

b. after implantation but before completion of the procedure:

i. the radionuclide;

ii. the treatment site;

iii. the number of sources; and

iv. the total source strength and exposure time (or the total dose).

C. For any administration requiring a written directive, the licensee shall develop, implement, and maintain written procedures to provide high confidence that:

1. the patient's or human research subject's identity is verified before each administration; and

2. each administration is in accordance with the written directive.

AUTHORITY NOTE: Promulgated in accordance with R.S. 30:2001 et seq.

HISTORICAL NOTE: Promulgated by the Department of Environmental Quality, Office of Air Quality and Radiation Protection, Radiation Protection Division, LR 18:34 (January 1992), amended LR 21:554 (June 1995), LR 24:2110 (November 1998), amended by the Office of Environmental Assessment, Environmental Planning Division, LR 26:2591 (November 2000), LR 30:1187 (June 2004).

Chapter 8. Radiation Safety Requirements for Analytical X-Ray Equipment

§801. Purpose and Scope

A. This part provides special requirements for analytical X-ray equipment. The requirements of this Part are in addition to, and not in substitution for, applicable requirements in Chapters 1, 2, 3, 4 and 10 of these regulations.

AUTHORITY NOTE: Promulgated in accordance with R.S. 30:2001 et seq.

HISTORICAL NOTE: Promulgated by the Department of Environmental Quality, Nuclear Energy Division, LR 13:569 (October 1987).

§802. Definitions

A. The definition of some terms used in this Chapter may be found in Chapter 6.

Analytical X-Ray Equipment—equipment used for X-ray diffraction or fluorescence analysis.

Analytical X-Ray System—a group of components utilizing X-rays to determine the elemental composition or to examine the microstructure of materials.

Fail-Safe Characteristics—design features which cause beam port shutters to close or which otherwise prevent emergence of the primary beam upon the failure of a safety or warning device.

Local Components—part of an analytical X-ray system and include areas that are struck by X-rays, such as radiation source housings, port and shutter assemblies, collimators, sample holders, cameras, goniometers, detectors and shielding, but do not include power supplies, transformers, amplifiers, readout devices and control panels.

Normal Operating Procedures—step-by-step instructions necessary to accomplish analysis. These procedures shall include sample insertion and manipulation, equipment alignment, routine maintenance by the registrant or licensee, and data recording procedures which are related to radiation safety.

Open-Beam Configuration—an analytical X-ray system in which an individual could accidentlly place some part of his body in the primary beam path during normal operation.

Primary Beam—ionizing radiation which passes through an aperture of the source housing by a direct path from the X-ray tube or a radioactive source located in the radiation source housing.

AUTHORITY NOTE: Promulgated in accordance with R.S. 30:2001 et seq.

HISTORICAL NOTE: Promulgated by the Department of Environmental Quality, Nuclear Energy Division, LR 13:569 (October 1987).

§803. Equipment Requirements

A. Safety Device. A device which prevents the entry of any portion of an individual's body into the primary X-ray beam path or which causes the beam to be shut off upon entry into its path shall be provided on all open-beam configurations. A registrant or licensee may apply to the Office of Environmental Compliance, Emergency and Radiological Services Division, for an exemption from the requirement of a safety device. Such application shall include:

1. a description of the various safety devices that have been evaluated;

2. the reason each of these devices cannot be used; and

3. a description of the alternative methods that will be employed to minimize the possibility of an accidental exposure, including procedures to assure that operators and others in the area will be informed of the absence of safety devices.

B. Warning Devices

1. Open-beam configurations shall be provided with a readily discernible indication of:

a. X-ray tube status "ON-OFF" located near the radiation source housing if the primary beam is controlled in this manner; and/or

b. shutter status "OPEN-CLOSED" located near each port on the radiation source housing if the primary beam is controlled in this manner.

2. Warning devices shall be so labeled that their purpose is easily identified. On equipment installed after December 31, 1976, warning devices shall have fail-safe characteristics.

C. Ports. Unused ports on radiation source housings shall be secured in the closed position in a manner which will prevent casual opening.

D. Labeling. All analytical X-ray equipment shall be labeled with a readily discernible sign or signs bearing the radiation caution symbol and words:

1. CAUTION—HIGH INTENSITY X-RAY BEAM, or words having a similar intent, on the X-ray source housing; and

2. CAUTION RADIATION—THIS EQUIPMENT PRODUCES RADIATION WHEN ENERGIZED, or words having a similar intent, near any switch that energizes an X-ray tube if the radiation source is an X-ray tube; or

3. CAUTION—RADIOACTIVE MATERIAL, or words having a similar intent, on the source housing if the radiation source is a radionuclide.

E. Shutters. On open-beam configurations installed after December 31, 1976, each port on the radiation source housing shall be equipped with a shutter that cannot be opened unless a collimator or a coupling has been connected to the port.

F. Warning Lights

1. An easily visible warning light labeled with the words X-RAY ON, or words having a similar intent, shall be located:

a. near any switch that energizes an X-ray tube and shall be illuminated only when the tube is energized; or

b. in the case of a radioactive source, near any switch that opens a housing shutter and which shall be illuminated only when the shutter is open.

2. On equipment installed after December 31, 1976, warning lights shall have fail-safe characteristics.

G. Radiation Source Housing. Each X-ray tube housing shall be so constructed that with all shutters closed the leakage radiation measured at a distance of 5 cm from its surface is not capable of producing a dose in excess of 2.5 mrem in one hour at any specified tube rating. If radioactive sources are used, corresponding dose limits shall not exceed 2 mrem per hour.

H. Generator Cabinet. Each X-ray generator shall be supplied with a protective cabinet which limits leakage radiation measured at a distance of 5 cm from its surface so that it is not capable of producing a dose in excess of 0.25 mrem in one hour.

AUTHORITY NOTE: Promulgated in accordance with R.S. 30:2001 et seq.

HISTORICAL NOTE: Promulgated by the Department of Environmental Quality, Nuclear Energy Division, LR 13:569 (October 1987), amended by the Office of Environmental Assessment, Environmental Planning Division, LR 26:2591 (November 2000), amended by the Office of the Secretary, Legal Affairs Division, LR 31:2533 (October 2005).

§804. Area Requirements

A. Radiation Levels. The local components of an analytical X-ray system shall be so located and arranged and shall include sufficient shielding or access control that no radiation levels exist in any area surrounding the local component group which could result in a dose to an individual present therein in excess of the dose limits given in LAC 33:XV.414 of these regulations. For systems utilizing X-ray tubes, these levels shall be met at any specified tube rating.

B. Surveys

1. Radiation surveys, as required by LAC 33:XV.430, of all analytical X-ray systems sufficient to show compliance with Subsection A of this Section shall be performed:

a. upon installation of the equipment and at least every 12 months thereafter;

b. following any change in the initial arrangement, number or type of local components in the system;

c. following any maintenance requiring the disassembly or removal of a local component in the system;

d. during the performance of maintenance and alignment procedures if the procedures require the presence of a primary X-ray beam when any local component in the system is disassembled or removed;

e. any time a visual inspection of the local components in the system reveals an abnormal condition; and

f. whenever personnel monitoring devices show a significant increase over the previous monitoring period or when the readings are approaching the radiation dose limits specified in Chapter 4.

2. Radiation survey measurements shall not be required if a registrant or licensee can demonstrate compliance with LAC 33:XV.804.A to the satisfaction of the department in some other manner.

C. Posting. Each area or room containing analytical X-ray equipment shall be conspicuously posted with a sign or signs bearing the radiation caution symbol and the words CAUTION—X-RAY EQUIPMENT, or words having a similar intent.

AUTHORITY NOTE: Promulgated in accordance with R.S. 30:2001 et seq.

HISTORICAL NOTE: Promulgated by the Department of Environmental Quality, Nuclear Energy Division, LR 13:569

(October 1987), amended by the Office of Environmental Assessment, Environmental Planning Division, LR 26:2591 (November 2000), amended by the Office of the Secretary, Legal Affairs Division, LR 32:814 (May 2006).

§805. Operating Requirements

A. Procedures. Normal operating procedures shall be written and available to all analytical X-ray equipment workers. No person shall be permitted to operate analytical X-ray equipment in any manner other than that specified in the procedures unless such person has obtained written approval of the person responsible for radiation safety.

B. Bypassing. No person shall bypass a safety device unless such person has obtained the approval of the person responsible for radiation safety. Such approval shall be for a specified period of time. When a safety device has been bypassed, a readily discernible sign bearing the words SAFETY DEVICE NOT WORKING, or words having a similar intent, shall be placed on the radiation source housing and the control panel.

AUTHORITY NOTE: Promulgated in accordance with R.S. 30:2001 et seq.
HISTORICAL NOTE: Promulgated by the Department of Environmental Quality, Nuclear Energy Division, LR 13:569 (October 1987).

§806. Personnel Requirements

A. Instruction

1. No person shall be permitted to operate or maintain analytical X-ray equipment unless such person has received instruction in and demonstrated competence with regard to:

a. identification of radiation hazards associated with the use of the equipment;

b. significance of the various radiation warning and safety devices incorporated into the equipment, or the reasons they have not been installed on certain pieces of equipment and the extra precautions required in such cases;

c. proper operating procedures for the equipment;

d. symptoms of an acute localized exposure; and

e. proper procedures for reporting an actual or suspected exposure.

2. Each licensee or registrant shall maintain, for inspection by the department, records of training which demonstrate that the requirements of this Section have been met.

B. Personnel Monitoring

1. Finger or wrist dosimetric devices shall be provided to, and shall be used by:

a. analytical X-ray equipment workers using systems having an open-beam configuration and not equipped with a safety device; and

b. personnel maintaining analytical X-ray equipment if the maintenance procedures require the presence of a primary X-ray beam when any local component in the analytical X-ray system is disassembled or removed.

2. Reported dose values shall not be used for the purpose of determining compliance with LAC 33:XV.410 unless evaluated by a qualified expert.

AUTHORITY NOTE: Promulgated in accordance with R.S. 30:2001 et seq.
HISTORICAL NOTE: Promulgated by the Department of Environmental Quality, Nuclear Energy Division, LR 13:569 (October 1987), amended by the Office of Environmental Assessment, Environmental Planning Division, LR 26:2591 (November 2000).

Chapter 9. Radiation Safety Requirements for Particle Accelerators

§901. Purpose and Scope

A. This Chapter establishes procedures for the registration and licensing, and for the use of particle accelerators.

B. In addition to the requirements of this Chapter, all registrants and/or licensees are subject to the applicable requirements of LAC 33:XV.Chapters 1 and 2 and/or LAC 33:XV.Chapters 3, 4, and 10. Registrants and licensees engaged in industrial radiographic operations are subject to the requirements of LAC 33:XV.Chapter 5, and registrants and/or licensees engaged in the healing arts are subject to the requirements of LAC 33:XV.Chapter 6 and/or LAC 33:XV.Chapter 7. All licensees and registrants whose operations result in the production of radioactive material are subject to the requirements of LAC 33:XV.Chapter 3.

AUTHORITY NOTE: Promulgated in accordance with R.S. 30:2001 et seq.
HISTORICAL NOTE: Promulgated by the Department of Environmental Quality, Nuclear Energy Division, LR 13:569 (October 1987), amended by the Office of Air Quality and Radiation Protection, Radiation Protection Division, LR 19:1421 (November 1993).

Subchapter A. Registration and Licensing Procedures

§902. Registration and License Requirements

A. No person shall receive, possess, use, transfer, own, or acquire a particle accelerator except as authorized in a registration and/or license issued pursuant to LAC 33:XV or as otherwise provided for in LAC 33:XV. The general procedures for registration of particle accelerator facilities are included in LAC 33:XV.Chapter 2, while the general procedures for licensing are included in LAC 33:XV.Chapter 3.

AUTHORITY NOTE: Promulgated in accordance with R.S. 30:2001 et seq.
HISTORICAL NOTE: Promulgated by the Department of Environmental Quality, Nuclear Energy Division, LR 13:569 (October 1987), amended by the Office of Air Quality and Radiation Protection, Radiation Protection Division, LR 19:1421 (November 1993).

§903. General Requirements for the Issuance of a Registration or License for Particle Accelerators

A. In addition to the requirements of LAC 33:XV.Chapters 2 and 3, a registration and/or license application for use of a particle accelerator will be approved only if the department determines that:

1. the applicant is qualified by reason of training and experience to use the accelerator in question for the purpose requested in accordance with this Chapter and LAC 33:XV.Chapters 4 and 10 in such a manner as to minimize danger to public welfare and safety or property;

2. the applicant's proposed or existing equipment, facilities, and operating and emergency procedures are adequate to protect health and minimize danger to public welfare and safety or property;

3. the issuance of the registration and/or license will not be inimical to the welfare and safety of the public, and the applicant satisfies any applicable special requirement in LAC 33:XV.904;

4. the applicant has appointed a radiation safety officer;

5. the applicant and/or the applicant's staff has substantial experience in the use of particle accelerators and training sufficient for application in their intended uses;

6. the applicant has established a radiation safety committee to approve, in advance, proposals for uses of particle accelerators; and

7. the applicant has an adequate training program for particle accelerator operators.

AUTHORITY NOTE: Promulgated in accordance with R.S. 30:2001 et seq.
HISTORICAL NOTE: Promulgated by the Department of Environmental Quality, Nuclear Energy Division, LR 13:569 (October 1987), amended by the Office of Air Quality and Radiation Protection, Radiation Protection Division, LR 19:1421 (November 1993), amended by the Office of Environmental Assessment, Environmental Planning Division, LR 26:2591 (November 2000).

§904. Human Use of Particle Accelerators

A. In addition to the requirements set forth in LAC 33:XV.Chapters 2 and 3, a registration and/or license for use of a particle accelerator in the healing arts will be issued only if the following criteria are met:

1. the applicant has appointed a medical committee of at least three members to evaluate all proposals for research. Membership of the committee should include physicians expert in internal medicine, hematology, therapeutic radiology, and/or a person experienced in depth dose calculations and protection against radiation. The committee is not required if research will not be performed with the accelerator;

2. the individuals designated on the application as the users have substantial training and experience in deep therapy techniques or in the use of particle accelerators to treat humans; and

3. each individual designated on the application as a user is a physician.

AUTHORITY NOTE: Promulgated in accordance with R.S. 30:2001 et seq.
HISTORICAL NOTE: Promulgated by the Department of Environmental Quality, Nuclear Energy Division, LR 13:569 (October 1987), amended by the Office of Air Quality and Radiation Protection, Radiation Protection Division, LR 19:1421 (November 1993).

Subchapter B. Radiation Safety Requirements for the Use of Particle Accelerators

§906. Limitations

A. No registrant and/or licensee shall permit any person to act as a particle accelerator operator until such person:

1. has been instructed in radiation safety and shall have demonstrated an understanding thereof;

2. has received copies of and instruction in this Chapter and the applicable requirements of LAC 33:XV.Chapters 4 and 10, pertinent registration and/or license conditions, and the registrant's and/or licensee's operating and emergency procedures, and shall have demonstrated understanding thereof; and

3. has demonstrated competence to use the particle accelerator, related equipment, and survey instruments that will be employed in his or her assignment.

B. Either the radiation safety committee or the radiation safety officer, in addition to duly authorized representatives of the department, shall have the authority to terminate the operations at a particle accelerator facility if such action is deemed necessary to minimize danger to public welfare and safety or property.

AUTHORITY NOTE: Promulgated in accordance with R.S. 30:2001 et seq.
HISTORICAL NOTE: Promulgated by the Department of Environmental Quality, Nuclear Energy Division, LR 13:569 (October 1987), amended by the Office of Air Quality and Radiation Protection, Radiation Protection Division, LR 19:1421 (November 1993), amended by the Office of Environmental Assessment, Environmental Planning Division, LR 26:2592 (November 2000).

§907. Shielding and Safety Design Requirements

A. A qualified expert, specifically accepted in writing by the department, shall be consulted in the design of a particle accelerator installation and shall be called upon to perform a radiation survey when the accelerator is first capable of producing radiation. A copy of the survey shall be submitted to the Office of Environmental Compliance, Emergency and Radiological Services Division.

B. Plans for construction of new accelerator installations shall be submitted to the Office of Environmental Compliance, Emergency and Radiological Services

Division, for approval prior to commencement of construction.

C. Each particle accelerator installation shall be provided with such primary and/or secondary barriers as are necessary to assure compliance with LAC 33:XV.410 and 422.

AUTHORITY NOTE: Promulgated in accordance with R.S. 30:2001 et seq.
HISTORICAL NOTE: Promulgated by the Department of Environmental Quality, Nuclear Energy Division, LR 13:569 (October 1987), amended by the Office of Air Quality and Radiation Protection, Radiation Protection Division, LR 19:1421 (November 1993), amended by the Office of Environmental Assessment, Environmental Planning Division, LR 26:2592 (November 2000), amended by the Office of the Secretary, Legal Affairs Division, LR 31:2533 (October 2005).

§908. Particle Accelerator Controls and Interlock Systems

A. Instrumentation, readouts, and controls on the particle accelerator control console shall be clearly identified, legible, and easily discernible.

B. All entrances into a target room or other high radiation area shall be provided with interlocks that shut down the machine under conditions of barrier penetration or intrusion.

C. When an interlock system has been tripped, it shall be possible to resume operation of the accelerator only by manually resetting controls at the position where the interlock has been tripped and, lastly, at the main control console.

D. Each radiation safety interlock shall be on a circuit that shall allow its operation independently of all other safety interlocks.

E. All radiation safety interlocks shall be fail-safe, i.e., designed so that any defect or component failure in the interlock system prevents operation of the accelerator.

F. A "scram button" or other emergency power cutoff switch shall be located and easily identifiable in all high radiation areas. Such a cutoff switch shall include a manual reset so that the accelerator cannot be restarted from the accelerator control console without resetting the emergency power cutoff switch.

AUTHORITY NOTE: Promulgated in accordance with R.S. 30:2001 et seq.
HISTORICAL NOTE: Promulgated by the Department of Environmental Quality, Nuclear Energy Division, LR 13:569 (October 1987), amended by the Office of Air Quality and Radiation Protection, Radiation Protection Division, LR 19:1421 (November 1993).

§909. Warning Devices

A. All locations designated as high radiation areas, and entrances to such locations, shall be equipped with easily observable warning lights that operate when, and only when, radiation is being produced.

B. Except in facilities designed for human exposure, each high radiation area shall have an audible warning device that shall be activated for 15 seconds prior to the possible creation of such high radiation area. Such warning device shall be clearly discernible and audible in all high radiation areas.

C. Except in facilities designed for human exposure, barriers, temporary or otherwise, and pathways leading to high radiation areas shall be identified by posting signs in accordance with LAC 33:XV.450.

AUTHORITY NOTE: Promulgated in accordance with R.S. 30:2001 et seq.
HISTORICAL NOTE: Promulgated by the Department of Environmental Quality, Nuclear Energy Division, LR 13:569 (October 1987), amended by the Office of Air Quality and Radiation Protection, Radiation Protection Division, LR 19:1421 (November 1993).

§910. Operating Procedures

A. Particle accelerators, when not in operation, shall be secured in a manner that will prevent unauthorized use.

B. The safety interlock system shall not be used to turn off the accelerator beam except in an emergency.

C. All safety and warning devices, including interlocks, shall be checked for proper operability at intervals not to exceed three months. Results of such tests shall be maintained for two years for inspection by the department at the accelerator facility.

D. Electrical circuit diagrams of the accelerator and the associated interlock systems shall be kept current and maintained for inspection by the department and shall be available to the operator at each accelerator facility.

E. If, for any reason, it is necessary to intentionally bypass a safety interlock or interlocks, such action shall be:

1. authorized by the radiation safety committee and/or radiation safety officer;

2. recorded in a permanent log and a notice posted at the accelerator control console; and

3. terminated as soon as possible.

F. A copy of the current operating and emergency procedures shall be maintained at the accelerator control panel at all times.

AUTHORITY NOTE: Promulgated in accordance with R.S. 30:2001 et seq.
HISTORICAL NOTE: Promulgated by the Department of Environmental Quality, Nuclear Energy Division, LR 13:569 (October 1987), amended by the Office of Air Quality and Radiation Protection, Radiation Protection Division, LR 19:1421 (November 1993), amended by the Office of Environmental Assessment, Environmental Planning Division, LR 26:2592 (November 2000).

§911. Radiation Monitoring Requirements

A. There shall be available at each particle accelerator facility appropriate portable monitoring equipment that is operable and that has been calibrated for the appropriate radiations being produced at the facility. Such equipment shall be tested for proper operation daily and calibrated at

intervals not to exceed one year and also after servicing and repair.

B. A radiation protection survey shall be performed, documented, and submitted to the Office of Environmental Compliance, Emergency and Radiological Services Division, by a qualified expert specifically approved in writing by the department when changes have been made in shielding, operation, equipment, or occupancy of adjacent areas.

C. Radiation levels in all high radiation areas shall be continuously monitored. The monitoring devices shall be electrically independent of the accelerator control and interlock systems and shall be capable of providing a readout at the control panel.

D. All area monitors shall be calibrated at intervals not to exceed one year and also after each servicing and repair.

E. Whenever applicable, periodic surveys shall be made to determine the amount of airborne particulate radioactivity present in areas of airborne hazards.

F. Whenever applicable, periodic smear surveys shall be made to determine the degree of contamination in target and other pertinent areas.

G. All area surveys shall be made in accordance with the written procedures established by a qualified expert or the radiation safety officer of the particle accelerator facility.

H. Records of all radiation protection surveys, calibrations, and instrumentation tests shall be maintained at each accelerator facility for inspection by the department.

AUTHORITY NOTE: Promulgated in accordance with R.S. 30:2001 et seq.

HISTORICAL NOTE: Promulgated by the Department of Environmental Quality, Nuclear Energy Division, LR 13:569 (October 1987), amended by the Office of Air Quality and Radiation Protection, Radiation Protection Division, LR 19:1421 (November 1993), amended by the Office of Environmental Assessment, Environmental Planning Division, LR 26:2592 (November 2000), amended by the Office of the Secretary, Legal Affairs Division, LR 31:2533 (October 2005).

§912. Ventilation Systems

A. A means shall be provided to ensure that personnel entering any area where airborne radioactivity may be produced will not be exposed to airborne radioactive material in excess of those limits specified in LAC 33:XV.499.Appendix B, Table I.

B. A registrant and/or licensee, as required by LAC 33:XV.416, shall not vent, release, or otherwise discharge airborne radioactive material to an unrestricted area in concentrations that exceed the limits specified in LAC 33:XV.499.Appendix B, Table II, except as authorized pursuant to LAC 33:XV.422.B or 461. For purposes of this Subsection, concentrations may be averaged over a period not greater than one year. Every reasonable effort should be made to maintain releases of radioactive material to unrestricted areas as far below these limits as is reasonably achievable. Records of intentional releases shall be maintained for two years for inspection by the department.

AUTHORITY NOTE: Promulgated in accordance with R.S. 30:2001 et seq.

HISTORICAL NOTE: Promulgated by the Department of Environmental Quality, Nuclear Energy Division, LR 13:569 (October 1987), amended by the Office of Air Quality and Radiation Protection, Radiation Protection Division, LR 19:1421 (November 1993), amended by the Office of Environmental Assessment, Environmental Planning Division, LR 26:2592 (November 2000).

§915. Notifications, Reports, and Records of Medical Events

A. A registrant shall report any medical event, except for an event that results from patient intervention, in which the administration of radiation results in one or more of the events described in LAC 33:XV.712.A or involves the wrong patient, wrong treatment site, or wrong mode of treatment.

B. A registrant shall report any event resulting from intervention of a patient or human research subject in which the administration of radiation results or will result in unintended permanent functional damage to an organ or a physiological system, as determined by a physician.

C. All reports, notifications, and records shall be in accordance with LAC 33:XV.712.C, D, and F.

D. Aside from the notification requirement, nothing in this Section affects any rights or duties of registrants and physicians in relation to each other, the individual, or the individual's responsible relatives or guardians.

AUTHORITY NOTE: Promulgated in accordance with R.S. 30:2104 et seq.

HISTORICAL NOTE: Promulgated by the Department of Environmental Quality, Office of Environmental Assessment, LR 31:1065 (May 2005).

§917. Report and Notification of a Dose to an Embryo/Fetus

A. A registrant shall report any dose to an embryo/fetus in excess of 50 mSv (5 rem) dose equivalent that is a result of a therapeutic X-ray procedure, in accordance with LAC 33:XV.710.A and C-F.

AUTHORITY NOTE: Promulgated in accordance with R.S. 30:2104 et seq.

HISTORICAL NOTE: Promulgated by the Department of Environmental Quality, Office of Environmental Assessment, LR 31:1065 (May 2005).

Chapter 10. Notices, Instructions, and Reports to Workers; Inspections

§1001. Purpose and Scope

A. This Chapter establishes requirements for notices, instructions, and reports by licensees or registrants to individuals engaged in work under a license or registration and options available to such individuals in connection with department inspections of licensees or registrants to ascertain compliance with the provisions of the act and regulations, orders, and licenses issued thereunder regarding

radiological working conditions. The regulations in this Chapter apply to all persons who receive, possess, use, own, or transfer sources of radiation licensed or registered pursuant to LAC 33:XV.Chapters 2 and 3.

AUTHORITY NOTE: Promulgated in accordance with R.S. 30:2001 et seq.

HISTORICAL NOTE: Promulgated by the Department of Environmental Quality, Nuclear Energy Division, LR 13:569 (October 1987), amended by the Office of Air Quality and Radiation Protection, Radiation Protection Division, LR 19:1421 (November 1993), amended by the Office of Environmental Assessment, Environmental Planning Division, LR 26:2592 (November 2000).

§1011. Posting of Notices to Workers

A. Unless specifically provided otherwise by these regulations, each licensee or registrant shall post current copies of the following documents:

1. the regulations in this Chapter, LAC 33:XV.Chapter 4, and all applicable regulations;

2. the license, certificate of registration, conditions or documents incorporated into the license by reference, and amendments thereto;

3. the operating procedures applicable to work under the license or registration;

4. any notice of violation involving radiological working conditions, proposed imposition of penalty or order issued pursuant to LAC 33:XV.Chapter 1, and any response from the licensee or registrant.

B. If posting of a document specified in LAC 33:XV.1011.A.1, 2, or 3 is not practical, the licensee or registrant may post a notice that describes the document and states where it may be examined.

C. Form DRC-3, "Notice to Employees, " shall be posted by each licensee or registrant as required by LAC 33:XV. Form DRC-3 will be furnished by the department on request.

D. Documents posted pursuant to LAC 33:XV.1011.A.4 shall be posted within five working days after receipt of the documents; the licensee's or registrant's response, if any, shall be posted within five working days after dispatch from the licensee or registrant. Such documents shall remain posted for a minimum of five working days or until action correcting the violation has been completed, whichever is later.

E. Documents, notices, or forms posted pursuant to this Section shall appear in a sufficient number of places to permit individuals engaged in work under the license or registration to observe them on the way to or from any particular work location to which the document applies, shall be conspicuous, and shall be replaced if defaced or altered.

AUTHORITY NOTE: Promulgated in accordance with R.S. 30:2001 et seq.

HISTORICAL NOTE: Promulgated by the Department of Environmental Quality, Nuclear Energy Division, LR 13:569 (October 1987), amended by the Office of Air Quality and Radiation Protection, Radiation Protection Division, LR 19:1421 (November 1993), LR 20:653 (June 1994), amended by the Office of Environmental Assessment, Environmental Planning Division, LR 26:2593 (November 2000).

§1012. Instructions to Workers

A. All individuals who, in the course of employment, are likely to receive in a year an occupational dose in excess of 100 mrem (1 mSv) shall be:

1. kept informed of the storage, transfer, or use of sources of radiation in the licensee's or registrant's workplace;

2. instructed in the health protection problems associated with exposure to such radioactive material or radiation (including biological risks to an embryo or fetus), in precautions or procedures to minimize exposure, and in the purposes and functions of protective devices employed;

3. instructed in, and instructed to observe, to the extent within the worker's control, the applicable provisions of the Louisiana Radiation Protection Regulations (LAC 33:XV) and licenses for the protection of personnel from exposures to radiation or radioactive material;

4. instructed of their responsibility to report promptly to the licensee or registrant any condition that may constitute, lead to, or cause a violation of the Louisiana Radiation Protection Regulations (LAC 33:XV) and licenses or unnecessary exposure to radiation or radioactive material;

5. instructed in the appropriate response to warnings made in the event of any unusual occurrence or malfunction that may involve exposure to radiation or radioactive material; and

6. advised as to the radiation exposure reports that workers shall be furnished in accordance with LAC 33:XV.1013.

B. The extent of the instructions required by Subsection A of this Section shall be commensurate with potential radiological health protection problems present in the workplace.

AUTHORITY NOTE: Promulgated in accordance with R.S. 30:2001 et seq.

HISTORICAL NOTE: Promulgated by the Department of Environmental Quality, Nuclear Energy Division, LR 13:569 (October 1987), amended by the Office of Air Quality and Radiation Protection, Radiation Protection Division, LR 19:1421 (November 1993), LR 22:976 (October 1996), LR 24:2110 (November 1998).

§1013. Notifications and Reports to Individuals

A. Radiation exposure data for an individual and the results of any measurements, analyses, and calculations of radioactive material deposited or retained in the body of an individual shall be reported to the individual as specified in this Section. The information reported shall include data and results obtained pursuant to the Louisiana Radiation Protection Regulations (LAC 33:Part XV), orders or license conditions, as shown in records maintained by the licensee or registrant pursuant to LAC 33:XV.476. Each notification and report shall be in writing and shall include:

1. appropriate identifying data such as:

a. the name of the licensee or registrant;

b. the name of the individual; and

c. the individual's driver's license or state identification number and the issuing state;

2. the individual's exposure information; and

3. the following statement:

"This report is furnished to you under the provisions of the Louisiana Radiation Protection Regulations, LAC 33:XV.Chapter 10. You should retain this report for further reference."

B. Each licensee or registrant shall furnish to all workers, annually, a written report of the worker's exposure to radiation or radioactive material as shown in records maintained by the licensee or registrant in accordance with LAC 33:XV.476.

C. Each licensee or registrant shall furnish to each worker a written report of the worker's exposure (mrem) to radiation or radioactive material upon termination of employment. Such report shall be furnished within 30 days from the time of termination of employment or within 30 days after the exposure of the individual has been determined by the licensee or registrant, whichever is later. The report shall cover each calendar quarter in which the worker's activities involved exposure to sources of radiation and shall include the dates and locations of work under the license or registration in which the worker participated.

D. When a licensee or registrant is required, in accordance with LAC 33:XV.486, 487, or 488, to report to the department any exposure of an identified occupationally exposed individual, or an identified member of the public, to radiation or radioactive material, the licensee or the registrant shall also provide the individual a written report on his or her exposure data included therein. Such reports shall be transmitted at a time not later than the transmittal to the department.

E. At the request of a worker who is terminating employment in a given calendar quarter with the licensee or registrant in work involving a radiation dose, or of a worker who while employed by another person, is terminating an assignment to work involving a radiation dose in the licensee's facility in that calendar quarter, each licensee shall provide to each such worker, or to the worker's designee, at termination, a written report regarding the radiation dose received by that worker from operations of the licensee during that specifically identified calendar quarter or fraction thereof, or provide a written estimate of that dose if the finally determined personnel monitoring results are not available at that time. Estimated doses shall be clearly indicated as such.

AUTHORITY NOTE: Promulgated in accordance with R.S. 30:2001 et seq.

HISTORICAL NOTE: Promulgated by the Department of Environmental Quality, Nuclear Energy Division, LR 13:569 (October 1987), amended by the Office of Air Quality and Radiation Protection, Radiation Protection Division, LR 19:1421 (November 1993), LR 22:976 (October 1996), LR 24:2111 (November 1998), amended by the Office of Environmental Assessment, Environmental Planning Division, LR 26:2593 (November 2000), amended by the Office of Environmental Assessment, LR 30:2805 (December 2004).

§1014. Presence of Representatives of Licensees or Registrants and of Workers During Inspection

A. Each licensee or registrant shall afford to the department, at all reasonable times, opportunity to inspect materials, machines, activities, facilities, premises, and records pursuant to LAC 33:XV.

B. During an inspection, department inspectors may consult privately with workers as specified in LAC 33:XV.1015. The licensee or registrant, or his or her representative, may accompany department inspectors during other phases of an inspection.

C. If, at the time of inspection, an individual has been authorized by the workers to represent them during department inspections, the licensee or registrant shall notify the inspectors of such authorization and shall give the workers' representative an opportunity to accompany the inspectors during the inspection of physical working conditions.

D. Each workers' representative shall be routinely engaged in work under control of the licensee or registrant and shall have received instructions as specified in LAC 33:XV.1012.

E. Different representatives of licensees or registrants and workers may accompany the inspectors during different phases of an inspection if there is no resulting interference with the conduct of the inspection. However, only one workers' representative at a time may accompany the inspectors.

F. With the approval of the licensee or registrant and the workers' representative, an individual who is not routinely engaged in work under control of the licensee or registrant, for example, a consultant to the licensee or registrant or to the workers' representative, shall be afforded the opportunity to accompany department inspectors during the inspection of physical working conditions.

G. Notwithstanding the other provisions of this Section, department inspectors are authorized to refuse to permit accompaniment by any individual who deliberately interferes with a fair and orderly inspection. With regard to any area containing proprietary information, the workers' representative for that area shall be an individual previously authorized by the licensee or registrant to enter that area.

AUTHORITY NOTE: Promulgated in accordance with R.S. 30:2001 et seq.

HISTORICAL NOTE: Promulgated by the Department of Environmental Quality, Nuclear Energy Division, LR 13:569 (October 1987), amended by the Office of Air Quality and Radiation Protection, Radiation Protection Division, LR 19:1421 (November 1993), amended by the Office of Environmental Assessment, Environmental Planning Division, LR 26:2593 (November 2000).

§1015. Consultation with Workers during Inspections

A. Department inspectors may consult privately with workers concerning matters of occupational radiation protection and other matters related to applicable provisions of the Louisiana Radiation Protection Regulations (LAC 33:XV) and licenses to the extent the inspectors deem necessary for the conduct of an effective and thorough inspection.

B. During the course of an inspection, any worker may bring privately to the attention of the inspectors, either orally or in writing, any past or present condition that the worker has reason to believe may have contributed to or caused any violation of the act, LAC 33:XV, license conditions, or any unnecessary exposure of an individual to sources of radiation under the licensee's or registrant's control. Any such notice in writing shall comply with the requirements of LAC 33:XV.1016.A.

C. The provisions of LAC 33:XV.1015.B shall not be interpreted as authorization to disregard instructions pursuant to LAC 33:XV.1012.

AUTHORITY NOTE: Promulgated in accordance with R.S. 30:2001 et seq.

HISTORICAL NOTE: Promulgated by the Department of Environmental Quality, Nuclear Energy Division, LR 13:569 (October 1987), amended by the Office of Air Quality and Radiation Protection, Radiation Protection Division, LR 19:1421 (November 1993), amended by the Office of Environmental Assessment, Environmental Planning Division, LR 26:2593 (November 2000).

§1016. Requests by Workers for Inspections

A. Any worker or representative of workers believing that a violation of the act, LAC 33:Part XV, or license conditions exists or has occurred in work under a license or registration with regard to radiological working conditions in which the worker is engaged may request an inspection by giving notice of the alleged violation to the Office of Environmental Compliance, Emergency and Radiological Services Division. Any such notice shall be in writing, shall set forth the specific grounds for the notice, and shall be signed by the worker or representative of the workers. A copy shall be provided to the licensee or registrant by the department no later than at the time of inspection except that, upon the request of the worker giving such notice, such worker's name and the names of individuals referred to therein shall not appear in such copy or on any record published, released, or made available by the department, except for good cause shown.

B. If, upon receipt of such notice, the department determines that the complaint meets the requirements set forth in LAC 33:XV.1016.A and that there are reasonable grounds to believe that the alleged violation exists or has occurred, the department shall cause an inspection to be made as soon as practicable, to determine if such alleged violation exists or has occurred. Inspections performed pursuant to this Section need not be limited to matters referred to in the complaint.

C. No licensee or registrant shall discharge or in any manner discriminate against any worker because such worker has filed any complaint or instituted or caused to be instituted any proceeding under LAC 33:XV or has testified or is about to testify in any such proceeding or because of the exercise by such worker on behalf of such worker or others of any option afforded by this Chapter, or any applicable state or federal law or regulation.

AUTHORITY NOTE: Promulgated in accordance with R.S. 30:2001 et seq.

HISTORICAL NOTE: Promulgated by the Department of Environmental Quality, Nuclear Energy Division, LR 13:569 (October 1987), amended by the Office of Air Quality and Radiation Protection, Radiation Protection Division, LR 19:1421 (November 1993), amended by the Office of Environmental Assessment, Environmental Planning Division, LR 26:2593 (November 2000), amended by the Office of the Secretary, Legal Affairs Division, LR 31:2534 (October 2005).

§1017. Inspections Not Warranted: Informal Review

A. Notification to Complainant and Informal Review

1. If the department determines, with respect to a complaint filed under LAC 33:XV.1016, that an inspection is not warranted because there are no reasonable grounds to believe that a violation exists, is occurring, or has occurred, the department shall notify the complainant in writing of such determination. The complainant may obtain review of such determination by submitting a written statement of position with the administrative authority, who will provide the licensee or registrant with a copy of such statement by certified mail, return receipt requested, excluding, at the request of the complainant, the name of the complainant. The licensee or registrant may submit an opposing written statement of position with the Office of Environmental Compliance, Emergency and Radiological Services Division, that will provide the complainant with a copy of such statement by certified mail, return receipt requested.

2. Upon the request of the complainant, the administrative authority may hold an informal conference in which the complainant and the licensee or registrant may orally present their views. An informal conference may also be held at the request of the licensee or registrant, but disclosure of the identity of the complainant will be made only following receipt of written authorization from the complainant. After considering all written or oral views presented, the administrative authority shall affirm, modify, or reverse the determination of the department and furnish the complainant and the licensee or registrant a written notification of his or her decision and the reason therefore.

B. Requirements of LAC 33:XV.1016.A Not Met. If the department determines that an inspection is not warranted because the requirements of LAC 33:XV.1016.A have not been met, it shall notify the complainant in writing of such determination. Such determination shall be without prejudice to the filing of a new complaint meeting the requirements of LAC 33:XV.1016.A.

AUTHORITY NOTE: Promulgated in accordance with R.S. 30:2001 et seq.

HISTORICAL NOTE: Promulgated by the Department of Environmental Quality, Nuclear Energy Division, LR 13:569 (October 1987), amended by the Office of Air Quality and Radiation Protection, Radiation Protection Division, LR 19:1421 (November 1993), amended by the Office of Environmental Assessment, Environmental Planning Division, LR 26:2594 (November 2000), amended by the Office of the Secretary, Legal Affairs Division, LR 31:2534 (October 2005).

Chapter 11. Radiation Safety Requirements for Radioactive Mineral Tailings and Industrial Byproduct Piles

§1101. Scope

A. The regulations in this Chapter establish requirements for radioactive mineral tailings, piles and ponds and byproduct piles containing radioactive material from industrial processes in concentrations in excess of $1x10^{-7}$ microcurie per gram [μCi/ml for liquids]. As used in this Chapter *byproduct* means any material produced, other than the primary product, in an industrial process. The provisions of this Chapter are in addition to, and not in substitution for, other applicable provisions of:

1. these regulations; and

2. any specific license issued pursuant to LAC 33:XV.330.

AUTHORITY NOTE: Promulgated in accordance with R.S. 30:2001 et seq.
HISTORICAL NOTE: Promulgated by the Department of Environmental Quality, Nuclear Energy Division, LR 13:569 (October 1987).

§1102. Specific Requirements for Tailings, Piles and Ponds

Unless specifically provided otherwise by the secretary, the following requirements for tailing, pile and pond areas shall be fulfilled.

A. Access to such areas shall be controlled and posted as specified by the department.

B. These areas shall be maintained in such a manner that excessive erosion of, or environmental hazards from, radioactive materials does not occur.

1. Pile edges adjacent to a river, bayou, creek or other water course shall be stabilized to prevent erosion.

2. Drainage ditches sufficient to prevent erosion from surface runoff water shall be provided.

C. Prior written approval of the secretary shall be obtained before the surface area of the land shall be put to use.

D. With the exception of reprocessing at the site, approval by the department must be obtained prior to removal of any material from these areas.

AUTHORITY NOTE: Promulgated in accordance with R.S. 30:2001 et seq.
HISTORICAL NOTE: Promulgated by the Department of Environmental Quality, Nuclear Energy Division, LR 13:569 (October 1987), amended by the Office of Environmental Assessment, Environmental Planning Division, LR 26:2594 (November 2000).

§1103. Sale or Transfer of the Site

A. The Office of Environmental Compliance, Emergency and Radiological Services Division, shall be given written notice 30 days in advance of any contemplated transfer of right, title or interest in the site by deed, lease or other conveyance. The written notice shall contain the name and address of the proposed purchaser or transferee.

AUTHORITY NOTE: Promulgated in accordance with R.S. 30:2001 et seq.
HISTORICAL NOTE: Promulgated by the Department of Environmental Quality, Nuclear Energy Division, LR 13:569 (October 1987), amended by the Office of Environmental Assessment, Environmental Planning Division, LR 26:2594 (November 2000), amended by the Office of the Secretary, Legal Affairs Division, LR 31:2534 (October 2005).

§1104. Abandonment of the Site

Prior to abandonment of the site, the requirements of this Section shall be fulfilled.

A. Piles shall be stabilized against wind and water erosion and contoured in a manner which will prevent collection of water.

B. In addition to the above requirements, any material which has been removed from the pile by natural forces shall be returned to the pile.

C. Ponds shall be drained and covered with materials that prevent blowing of dust. Water drained from the ponds shall be disposed of in a manner approved by the secretary.

D. Detailed plans for compliance with Subsections A, B, and C of this Section shall be submitted to the Office of Environmental Compliance, Emergency and Radiological Services Division, for review and approval.

AUTHORITY NOTE: Promulgated in accordance with R.S. 30:2001 et seq.
HISTORICAL NOTE: Promulgated by the Department of Environmental Quality, Nuclear Energy Division, LR 13:569 (October 1987), amended by the Office of Environmental Assessment, Environmental Planning Division, LR 26:2594 (November 2000), amended by the Office of the Secretary, Legal Affairs Division, LR 31:2534 (October 2005).

§1105. Waiver

A. Upon application to the administrative authority, certain requirements of this Chapter may be waived or modified if it can be shown that the requirements are unnecessary or impractical in specific cases.

AUTHORITY NOTE: Promulgated in accordance with R.S. 30:2001 et seq.
HISTORICAL NOTE: Promulgated by the Department of Environmental Quality, Nuclear Energy Division, LR 13:569 (October 1987), amended by the Office of Environmental Assessment, Environmental Planning Division, LR 26:2594 (November 2000).

Chapter 13. Licensing Requirements for Land Disposal of Radioactive Waste

Subchapter A. General Provisions

§1301. Purpose and Scope

A. The regulations in this Chapter establish procedures, criteria, and terms and conditions upon which the department issues licenses for the land disposal of wastes received from other persons. (Applicability of the requirements in this Chapter to department licenses for waste disposal facilities in effect on the effective date of this regulation will be determined on a case-by-case basis and implemented through terms and conditions of this Chapter are in addition to, and not in substitution for, other applicable requirements of these regulations).

B. The regulations in this Chapter do not apply to disposal of *byproduct material* as defined in LAC 33:XV.102 of these regulations in quantities greater than 10,000 kilograms containing more than 5 millicuries of radium-226 or disposal of waste as provided for in Chapter 4 of these regulations.

C. This Chapter establishes procedural requirements and performance objectives applicable to any method of land disposal. It establishes specific technical requirements for near-surface disposal of radioactive waste which involves disposal in the uppermost portion of the earth.

AUTHORITY NOTE: Promulgated in accordance with R.S. 30:2001 et seq.

HISTORICAL NOTE: Promulgated by the Department of Environmental Quality, Nuclear Energy Division, LR 13:569 (October 1987), amended by the Office of Environmental Assessment, Environmental Planning Division, LR 26:2595 (November 2000).

§1302. Definitions

A. As used in this Chapter, the following definitions apply.

Active Maintenance—any significant remedial activity needed during the period of institutional control to maintain a reasonable assurance that the performance objectives in LAC 33:XV.1319 and 1320 are met. Such active maintenance includes ongoing activities such as the pumping and treatment of water from a disposal unit or one-time measures such as replacement of a disposal unit cover. Active maintenance does not include custodial activities such as repair of fencing, repair or replacement of monitoring equipment, revegetation, minor additions to soil cover, minor repair of disposal unit covers, and general disposal site upkeep such as mowing grass.

Buffer Zone—a portion of the disposal site that is controlled by the licensee and that lies under the disposal units and between the disposal units and the boundary of the site.

Chelating Agent—amine polycarboxylic acids, hydroxy-carboxylic acids, gluconic acid, and polycarboxylic acids.

Commencement of Construction—any clearing of land, excavation, or other substantial action that would adversely affect the environment of a land disposal facility. The term does not mean disposal site exploration, necessary roads for disposal site exploration, borings to determine foundation conditions, or other preconstruction monitoring or testing to establish background information related to the suitability of the disposal site or the protection of environmental values.

Custodial Agency—an agency of the government designated to act on behalf of the government owner of the disposal site.

Disposal—the isolation of wastes from the biosphere inhabited by man and containing his food chains by emplacement in a land disposal facility.

Disposal Site—that portion of a land disposal facility which is used for disposal of waste. It consists of disposal units and a buffer zone.

Disposal Unit—a discrete portion of the disposal site into which waste is placed for disposal. For near-surface disposal, the unit is usually a trench.

Engineered Barrier—a man-made structure or device that is intended to improve the land disposal facility's ability to meet the performance objectives in this Chapter.

Explosive Material—any chemical compound, mixture, or device which produces a substantial instantaneous release of gas and heat spontaneously or by contact with sparks or flame.

Geologic Repository—a system that is intended to be used, or may be used, for the disposal of radioactive waste in excavated geologic media. A geologic repository includes the geologic repository operations area and the portion of the geologic setting that provides isolation of the radioactive waste.

Hazardous Waste—those wastes designated as hazardous by U.S. Environmental Protection Agency regulations in 40 CFR Part 261.

Hydrogeologic Unit—any soil or rock unit or zone which by virtue of its porosity or permeability, or lack thereof, has a distinct influence on the storage or movement of groundwater.

Inadvertent Intruder—a person who might occupy the disposal site after closure and engage in normal activities, such as agriculture, dwelling construction, or other pursuits in which an individual might be unknowingly exposed to radiation from the waste.

Intruder Barrier—a sufficient depth of cover over the waste that inhibits contact with waste and helps to ensure that radiation exposures to an inadvertent intruder will meet the performance objectives set forth in this Chapter or engineered structures that provide equivalent protection to the inadvertent intruder.

Land Disposal Facility—the land, buildings, structures, and equipment that are intended to be used for the disposal of radioactive wastes. For purposes of this Chapter, a "geologic repository" is not considered a "land disposal facility."

Monitoring—observing and making measurements to provide data to evaluate the performance and characteristics of the disposal site.

Near-Surface Disposal Facility—a land disposal facility in which waste is disposed of within approximately the upper 30 meters of the earth's surface.

Pyrophoric Liquid—any liquid that ignites spontaneously in dry or moist air at or below 130°F (54.4°C). A pyrophoric solid is any solid material, other than one classed as an explosive, which under normal conditions, is liable to cause fires through friction, retained heat from manufacturing or processing, or which can be ignited readily and, when ignited, burns so vigorously and persistently as to create a serious transportation, handling, or disposal hazard. Included are spontaneously combustible and water-reactive materials.

Site Closure and Stabilization—those actions that are taken upon completion of operations that prepare the disposal site for custodial care and that assure that the disposal site will remain stable and will not need ongoing active maintenance.

Stability—structural stability.

Surveillance—monitoring and observation of the disposal site for purposes of visual detection of need for maintenance, custodial care, evidence of intrusion, and compliance with other license and regulatory requirements.

Waste—those low-level radioactive wastes containing source, special nuclear or byproduct material that are acceptable for disposal in a land disposal facility. For the purposes of this definition, low-level waste has the same meaning as in the Low-Level Radioactive Waste Policy Act, P.L. 96-573, that is radioactive waste not classified as high-level radioactive waste, transuranic waste, spent nuclear fuel, or byproduct material as defined in Section 11.e(2) of the Atomic Energy Act (uranium or thorium tailings and waste).

AUTHORITY NOTE: Promulgated in accordance with R.S. 30:2001 et seq.

HISTORICAL NOTE: Promulgated by the Department of Environmental Quality, Nuclear Energy Division, LR 13:569 (October 1987), amended by the Office of Air Quality and Radiation Protection, Radiation Protection Division, LR 23:1140 (September 1997).

§1303. License Required

A. No person may receive, possess, and dispose of radioactive waste containing source, special nuclear or byproduct material at a land disposal facility unless authorized by a license issued by the department pursuant to this Chapter, and Chapter 3 of these regulations.

B. Each person shall file an application with the Office of Environmental Compliance, Emergency and Radiological Services Division, pursuant to LAC 33:XV.324 of these regulations and obtain a license as provided in this Chapter before commencement of construction of a land disposal facility. Failure to comply with this requirement may be grounds for denial of a license.

AUTHORITY NOTE: Promulgated in accordance with R.S. 30:2001 et seq.

HISTORICAL NOTE: Promulgated by the Department of Environmental Quality, Nuclear Energy Division, LR 13:569 (October 1987), amended by the Office of Environmental Assessment, Environmental Planning Division, LR 26:2595 (November 2000), amended by the Office of the Secretary, Legal Affairs Division, LR 31:2534 (October 2005).

§1305. Content of Application

A. In addition to the requirements set forth in LAC 33:XV.325 of these regulations, an application to receive from others, possess, and dispose of wastes shall consist of general information, specific technical information, institutional information, and financial information as set forth in LAC 33:XV.1306-1310.

AUTHORITY NOTE: Promulgated in accordance with R.S. 30:2001 et seq.

HISTORICAL NOTE: Promulgated by the Department of Environmental Quality, Nuclear Energy Division, LR 13:569 (October 1987).

§1306. General Information

The general information shall include each of the following:

A. identity of the applicant including:

1. the full name, address, telephone number, and description of the business or occupation of the applicant;

2. if the applicant is a partnership, the name and address of each partner and the principal location where the partnership does business;

3. if the applicant is a corporation or an unincorporated association:

a. the state where it is incorporated or organized and the principal location where it does business; and

b. the names and addresses of its directors and principal officers; and

4. if the applicant is acting as an agent or representative of another person in filing the application, all information required under LAC 33:XV.1306.A must be supplied with respect to the other person;

B. qualifications of the applicant:

1. the organizational structure of the applicant, both offsite and onsite, including a description of lines of authority and assignments of responsibilities, whether in the form of administrative directives, contract provisions, or otherwise;

2. the technical qualifications, including training and experience, of the applicant and members of the applicant's staff to engage in the proposed activities, as well as minimum training and experience requirements for personnel filling key positions described in LAC 33:XV.1306.B.1;

3. a description of the applicant's personnel training program; and

4. the plan to maintain an adequate complement of trained personnel to carry out waste receipt, handling, and disposal operations in a safe manner;

C. a description of:

1. the location of the proposed disposal site;

2. the general character of the proposed activities;

3. the types and quantities of waste to be received, possessed, and disposed of;

4. plans for use of the land disposal facility for purposes other than disposal of wastes; and

5. the proposed facilities and equipment;

D. proposed schedules for construction, receipt of waste, and first emplacement of waste at the proposed land disposal facility.

AUTHORITY NOTE: Promulgated in accordance with R.S. 30:2001 et seq.

HISTORICAL NOTE: Promulgated by the Department of Environmental Quality, Nuclear Energy Division, LR 13:569 (October 1987).

§1307. Specific Technical Information

The specific technical information shall include the following information needed for demonstration that the performance objectives and the applicable technical requirements of this Chapter will be met:

A. a description of the natural and demographic disposal site characteristics as determined by disposal site selection and characterization activities. The description shall include geologic, geochemical, geotechnical, hydrologic, ecologic, archaeologic, meteorologic, climatologic, and biotic features of the disposal site and vicinity;

B. a description of the design features of the land disposal facility and the disposal units. For near-surface disposal, the description shall include those design features related to infiltration of water; integrity of covers for disposal units; structural stability of backfill, wastes, and covers; contact of wastes with standing water; disposal site drainage; disposal site closure and stabilization; elimination to the extent practicable of long-term disposal site maintenance; inadvertent intrusion; occupational exposures; disposal site monitoring; and adequacy of the size of the buffer zone for monitoring and potential mitigative measures;

C. a description of the principal design criteria and their relationship to the performance objectives;

D. a description of the design basis natural events or phenomena and their relationship to the principal design criteria;

E. a description of codes and standards which the applicant has applied to the design and which will apply to construction of the land disposal facilities;

F. a description of the construction and operation of the land disposal facility. The description shall include as a minimum the methods of construction of disposal units; waste emplacement; the procedures for and areas of waste segregation; types of intruder barriers; onsite traffic and drainage systems; survey control program; methods and areas of waste storage; and methods to control surface water and groundwater access to the wastes. The description shall also include a description of the methods to be employed in the handling and disposal of wastes containing chelating agents or other non-radiological substances that might affect meeting the performance objectives of this Chapter;

G. a description of the disposal site closure plan, including those design features which are intended to facilitate disposal site closure and to eliminate the need for ongoing active maintenance;

H. an identification of the known natural resources at the disposal site, whose exploitation could result in inadvertent intrusion into the wastes after removal of active institutional control;

I. a description of the kind, amount, classification and specifications of the radioactive material proposed to be received, possessed, and disposed of at the land disposal facility;

J. a description of the quality assurance program, tailored to low-level radioactive waste disposal, developed and applied by the applicant for the determination of natural disposal characteristics and for quality assurance during the design, construction, operation, and closure of the land disposal facility and for the receipt, handling, and emplacement of waste;

K. a description of the radiation safety program for control and monitoring of radioactive effluents to ensure compliance with the performance objective in LAC 33:XV.1319 and occupational radiation exposure to ensure compliance with the requirements of Chapter 4 of these regulations and to control contamination of personnel, vehicles, equipment, buildings, and the disposal site. Both routine operations and accidents shall be addressed. The program description must include procedures, instrumentation, facilities, and equipment;

L. a description of the environmental monitoring program to provide data to evaluate potential health and environmental impacts and the plan for taking corrective measures if migration is indicated;

M. a description of the administrative procedures that the applicant will apply to control activities at the land disposal facility;

N. a description of the facility electronic recordkeeping system as required in LAC 33:XV.1333.J.

AUTHORITY NOTE: Promulgated in accordance with R.S. 30:2001 et seq.
HISTORICAL NOTE: Promulgated by the Department of Environmental Quality, Nuclear Energy Division, LR 13:569 (October 1987), amended by the Office of Air Quality and Radiation Protection, Radiation Protection Division, LR 23:1140 (September 1997), LR 24:2111 (November 1998).

§1308. Technical Analyses

The specific technical information shall also include the following analyses needed to demonstrate that the performance objectives of this Chapter will be met.

A. Pathways analyzed in demonstrating protection of the general population from releases of radioactivity shall include air, soil, groundwater, surface water, plant uptake, and exhumation by burrowing animals. The analyses shall clearly demonstrate that there is reasonable assurance that the exposures to humans from the release of radioactivity will not exceed the limits set forth in LAC 33:XV.1319.

B. Analyses of the protection of individuals from inadvertent intrusion shall include demonstration that there is reasonable assurance the waste classification and segregation requirements will be met and that adequate barriers to inadvertent intrusion will be provided.

C. Analyses of the protection of individuals during operations shall include assessments of expected exposures due to routine operations and likely accidents during handling, storage, and disposal of waste. The analyses shall provide reasonable assurance that exposures will be controlled to meet the requirements of Chapter 4 of these regulations.

D. Analyses of the long-term stability of the disposal site and the need for ongoing active maintenance after closure shall be based upon analyses of active natural processes such as erosion, mass wasting, slope failure, settlement of wastes and backfill, infiltration through covers over disposal areas and adjacent soils, and surface drainage of the disposal site. The analyses shall provide reasonable assurance that there will not be a need for ongoing active maintenance of the disposal site following closure.

AUTHORITY NOTE: Promulgated in accordance with R.S. 30:2001 et seq.
HISTORICAL NOTE: Promulgated by the Department of Environmental Quality, Nuclear Energy Division, LR 13:569 (October 1987).

§1309. Institutional Information

The institutional information submitted to the Office of Environmental Compliance, Emergency and Radiological Services Division, by the applicant shall include:

A. a certification by the federal or state agency which owns the disposal site that the federal or state agency is prepared to accept transfer of the license when the provisions of LAC 33:XV.1316 are met and will assume responsibility for institutional control after site closure and postclosure observation and maintenance;

B. where the proposed disposal site is on land not owned by the federal or a state government, the applicant shall submit evidence that arrangements have been made for assumption of ownership in fee by the federal or a state agency before the agency issues a license.

AUTHORITY NOTE: Promulgated in accordance with R.S. 30:2001 et seq.
HISTORICAL NOTE: Promulgated by the Department of Environmental Quality, Nuclear Energy Division, LR 13:569 (October 1987), amended by the Office of Environmental Assessment, Environmental Planning Division, LR 26:2595 (November 2000), amended by the Office of the Secretary, Legal Affairs Division, LR 31:2535 (October 2005).

§1310. Financial Information

A. The financial information shall be sufficient to demonstrate that the financial qualifications of the applicant are adequate to carry out the activities for which the license is sought and meet other financial assurance requirements of this Chapter.

AUTHORITY NOTE: Promulgated in accordance with R.S. 30:2001 et seq.
HISTORICAL NOTE: Promulgated by the Department of Environmental Quality, Nuclear Energy Division, LR 13:569 (October 1987).

§1311. Requirements for Issuance of a License

A license for the receipt, possession, and disposal of waste containing or contaminated with radioactive material will be issued by the department upon finding that:

A. the issuance of the license will not constitute an unreasonable risk to the health and safety of the public;

B. the applicant is qualified by reason of training and experience to carry out the disposal operations requested in a manner that protects health and minimizes danger to life or property;

C. the applicant's proposed disposal site, disposal design, land disposal facility operations (including equipment, facilities), and procedures, disposal site closure, and postclosure institutional control are adequate to protect the public health and safety in that they provide reasonable assurance that the general population will be protected from releases of radioactivity as specified in the performance objective in LAC 33:XV.1319;

D. the applicant's proposed disposal site, disposal site design, land disposal facility operations, (including equipment, facilities), and procedures, disposal site closure, and postclosure institutional control are adequate to protect the public health and safety in that they will provide reasonable assurance that individual inadvertent intruders are protected in accordance with the performance objective in LAC 33:XV.1320;

E. the applicant's proposed land disposal facility operations, including equipment, facilities, and procedures, are adequate to protect the public health and safety in that they will provide reasonable assurance that the standards for radiation protection set out in Chapter 4 of these regulations will be met;

F. the applicant's proposed disposal site, disposal site design, land disposal facility operations, disposal site closure, and postclosure institutional control are adequate to protect the public health and safety in that they will provide reasonable assurance that long-term stability of the disposed waste and the disposal site will be achieved and will eliminate to the extent practicable the need for ongoing active maintenance of the disposal site following closure;

G. the applicant's demonstration provides reasonable assurance that the applicable technical requirements of this Chapter will be met;

H. the applicant's proposal for institutional control provides reasonable assurance that such control will be provided for the length of time found necessary to ensure the findings in LAC 33:XV.1311.C-F and that the institutional control meets the requirements of LAC 33:XV.1328; and

I. the financial or surety arrangements meet the requirements of this Chapter.

AUTHORITY NOTE: Promulgated in accordance with R.S. 30:2001 et seq.
HISTORICAL NOTE: Promulgated by the Department of Environmental Quality, Nuclear Energy Division, LR 13:569 (October 1987), amended by the Office of Environmental Assessment, Environmental Planning Division, LR 26:2595 (November 2000).

§1312. Conditions of Licenses

A. A license issued under this Chapter, or any right thereunder, may be transferred, assigned, or in any manner disposed of, either voluntarily or involuntarily, directly or indirectly, through transfer of control of the license to any person, only if the department finds, after securing full information, that the transfer is in accordance with the provisions of the Act and gives its consent in writing in the form of a license amendment.

B. The licensee shall submit written statements under oath upon request of the department, at any time before termination of the license, to enable the department to determine whether the license should be modified, suspended, or revoked.

C. The license will be transferred to the site owner only on the full implementation of the final closure plan as approved by the department, including post-closure observation and maintenance.

D. The licensee shall be subject to the provisions of the Act now or hereafter in effect, and to all rules, regulations, and orders of the department. The terms and conditions of the license are subject to amendment, revision, or modification, by reason of amendments to, or by reason of rules, regulations, and orders issued in accordance with the terms of the Act.

E. Each person licensed by the department pursuant to the regulations in this Chapter shall confine possession and use of materials to the locations and purposes authorized in the license.

F. The licensee shall not dispose of waste until the department has inspected the land disposal facility and has found it to be in conformance with the description, design, and construction described in the application for a license.

G. The department may incorporate in any license at the time of issuance, or thereafter, by appropriate rule, regulation or order, additional requirements and conditions with respect to the licensee's receipt, possession, and disposal of waste as it deems appropriate or necessary in order to:

1. protect health or to minimize danger to life or property;

2. require reports and the keeping of records, and to provide for inspections of activities under the license that may be necessary or appropriate to effectuate the purposes of the Act and regulations thereunder.

H. The authority to dispose of wastes expires on the date stated in the license. Any expiration date on a license applies only to the above ground activities and to the authority to dispose of waste. Failure to renew the license shall not relieve the licensee of responsibility for implementing site closure, postclosure observation, and transfer of the license to the site owner.

AUTHORITY NOTE: Promulgated in accordance with R.S. 30:2001 et seq.
HISTORICAL NOTE: Promulgated by the Department of Environmental Quality, Nuclear Energy Division, LR 13:569 (October 1987), amended by the Office of Environmental Assessment, Environmental Planning Division, LR 26:2595 (November 2000).

§1313. Application for Renewal or Closure

A. An application for renewal or an application for closure under LAC 33:XV.1314 must be filed at least 90 days prior to license expiration.

B. Applications for renewal of a license must be filed in accordance with LAC 33:XV.1305-1310. Applications for closure must be filed in accordance with LAC 33:XV.1314. Information contained in previous applications, statements, or reports filed with the department under the license may be incorporated by reference if the references are clear and specific.

C. In any case in which a licensee has filed an application in proper form for renewal of a license, the license does not expire until the department has taken final action on the application for renewal.

D. In determining whether a license will be renewed, the department will apply the criteria set forth in LAC 33:XV.1311.

AUTHORITY NOTE: Promulgated in accordance with R.S. 30:2001 et seq.
HISTORICAL NOTE: Promulgated by the Department of Environmental Quality, Nuclear Energy Division, LR 13:569 (October 1987), amended by the Office of Environmental Assessment, Environmental Planning Division, LR 26:2596 (November 2000).

§1314. Contents of Application for Site Closure and Stabilization

A. Prior to final closure of the disposal site, or as otherwise directed by the department, the applicant shall submit an application to the Office of Environmental Compliance, Emergency and Radiological Services Division, to amend the license for closure. This closure application shall include a final revision and specific details of the disposal site closure plan included as part of the license application submitted under LAC 33:XV.1307.G that includes each of the following:

1. any additional geologic, hydrologic, or other data pertinent to the long-term containment of emplaced wastes obtained during the operational period;

2. the results of tests, experiments, or any other analyses relating to backfill of excavated areas, closure and sealing, waste migration and interaction with emplacement media, or any other tests, experiments, or analysis pertinent to the long-term containment of emplaced waste within the disposal site;

3. any proposed revision of plans for:

a. decontamination and/or dismantlement of surface facilities;

b. backfilling of excavated areas; or

c. stabilization of the disposal site for postclosure care;

4. any significant new information regarding the environmental impact of closure activities and long-term performance of the disposal site.

B. Upon review and consideration of an application to amend the license for closure submitted in accordance with LAC 33:XV.1314.A, the department shall issue an amendment authorizing closure if there is reasonable assurance that the long-term performance objectives of this Chapter will be met.

AUTHORITY NOTE: Promulgated in accordance with R.S. 30:2001 et seq.

HISTORICAL NOTE: Promulgated by the Department of Environmental Quality, Nuclear Energy Division, LR 13:569 (October 1987), amended by the Office of Environmental Assessment, Environmental Planning Division, LR 26:2596 (November 2000), amended by the Office of the Secretary, Legal Affairs Division, LR 31:2535 (October 2005).

§1315. Postclosure Observation and Maintenance

A. The licensee shall observe, monitor, and carry out necessary maintenance and repairs at the disposal site until the site closure is complete and the license is transferred by the department in accordance with LAC 33:XV.1316. Responsibility for the disposal site must be maintained by the licensee for five years. A shorter or longer time period for postclosure observation and maintenance may be established and approved as part of the site closure plan, based on site-specific conditions.

AUTHORITY NOTE: Promulgated in accordance with R.S. 30:2001 et seq.

HISTORICAL NOTE: Promulgated by the Department of Environmental Quality, Nuclear Energy Division, LR 13:569 (October 1987), amended by the Office of Environmental Assessment, Environmental Planning Division, LR 26:2596 (November 2000).

§1316. Transfer of License

Following closure and the period of postclosure observation and maintenance, the licensee may apply for an amendment to transfer the license to the disposal site owner. The license shall be transferred when the department finds:

A. that the closure of the disposal site has been made in conformance with the licensee's disposal site closure plan, as amended and approved as part of the license;

B. that reasonable assurance has been provided by the licensee that the performance objectives of this Part are met;

C. that any funds and necessary records for care will be transferred to the disposal site owner;

D. that the postclosure monitoring program is operational for implementation by the disposal site owner; and

E. that the federal or state agency which will assume responsibility for institutional control of the disposal site is prepared to assume responsibility and ensure that the institutional requirements found necessary under LAC 33:XV.1311.H will be met.

AUTHORITY NOTE: Promulgated in accordance with R.S. 30:2001 et seq.

HISTORICAL NOTE: Promulgated by the Department of Environmental Quality, Nuclear Energy Division, LR 13:569 (October 1987), amended by the Office of Environmental Assessment, Environmental Planning Division, LR 26:2596 (November 2000).

§1317. Termination of License

A. Following any period of institutional control needed to meet the requirements found necessary under LAC 33:XV.1311, the licensee may apply for an amendment to terminate the license.

B. This application will be reviewed in accordance with the provisions of LAC 33:XV.324 of these regulations.

C. A license shall be terminated only when the department finds:

1. that the institutional control requirements found necessary under LAC 33:XV.1311.H have been met;

2. that any additional requirements resulting from new information developed during the institutional control period have been met; and

3. that permanent monuments or markers warning against intrusion have been installed.

AUTHORITY NOTE: Promulgated in accordance with R.S. 30:2001 et seq.

HISTORICAL NOTE: Promulgated by the Department of Environmental Quality, Nuclear Energy Division, LR 13:569 (October 1987), amended by the Office of Environmental

Assessment, Environmental Planning Division, LR 26:2596 (November 2000).

Subchapter B. Performance Objectives

§1318. General Requirement

A. Land disposal facilities shall be sited, designed, operated, closed, and controlled after closure so that reasonable assurance exists that exposures to individuals are within the requirements established in the performance objectives in LAC 33:XV.1319-1322.

AUTHORITY NOTE: Promulgated in accordance with R.S. 30:2001 et seq.
HISTORICAL NOTE: Promulgated by the Department of Environmental Quality, Nuclear Energy Division, LR 13:569 (October 1987).

§1319. Protection of the General Population from Releases of Radioactivity

A. Concentrations of radioactive material which may be released to the general environment in ground water, surface water, air, soil, plants, or animals shall not result in an annual dose exceeding an equivalent of 25 millirems [0.25 mSv] to the whole body, 75 millirems [0.75 mSv] to the thyroid and 25 millirems [0.25 mSv] to any other organ of any member of the public. Reasonable effort should be made to maintain releases of radioactivity in effluents to the general environment as low as is reasonably achievable.

AUTHORITY NOTE: Promulgated in accordance with R.S. 30:2001 et seq.
HISTORICAL NOTE: Promulgated by the Department of Environmental Quality, Nuclear Energy Division, LR 13:569 (October 1987).

§1320. Protection of Individuals from Inadvertent Intrusion

A. Design, operation, and closure of the land disposal facility shall ensure protection of any individual inadvertently intruding into the disposal site and occupying the site or contacting the waste at any time after institutional controls over the disposal site are removed.

AUTHORITY NOTE: Promulgated in accordance with R.S. 30:2001 et seq.
HISTORICAL NOTE: Promulgated by the Department of Environmental Quality, Nuclear Energy Division, LR 13:569 (October 1987).

§1321. Protection of Individuals during Operations

A. Operations at the land disposal facility shall be conducted in compliance with the standards for radiation protection set out in Chapter 4 of these regulations, except for releases of radioactivity in effluents from the land disposal facility, which shall be governed by LAC 33:XV.1319. Every reasonable effort should be made to maintain radiation exposures as low as reasonably achievable.

AUTHORITY NOTE: Promulgated in accordance with R.S. 30:2001 et seq.
HISTORICAL NOTE: Promulgated by the Department of Environmental Quality, Nuclear Energy Division, LR 13:569 (October 1987).

§1322. Stability of the Disposal Site after Closure

A. The disposal facility shall be sited, designed, used, operated, and closed to achieve long-term stability of the disposal site and to eliminate, to the extent practicable, the need for ongoing active maintenance of the disposal site following closure so that only surveillance, monitoring, or minor custodial care are required.

AUTHORITY NOTE: Promulgated in accordance with R.S. 30:2001 et seq.
HISTORICAL NOTE: Promulgated by the Department of Environmental Quality, Nuclear Energy Division, LR 13:569 (October 1987).

Subchapter C. Technical Requirements for Land Disposal Facilities

§1323. Disposal Site Suitability Requirements for Land Disposal

A. Disposal Site Suitability for Near-Surface Disposal. The primary emphasis in disposal site suitability is given to isolation of wastes and to disposal site features that ensure that the long-term performance objectives are met.

1. The disposal site shall be capable of being characterized, modeled, analyzed and monitored.

2. Within the region where the facility is to be located, a disposal site should be selected so that projected population growth and future developments are not likely to affect the ability of the disposal facility to meet the performance objectives of this Chapter.

3. Areas shall be avoided having known natural resources which, if exploited, would result in failure to meet the performance objectives of this Chapter.

4. The disposal site shall be generally well drained and free of areas of flooding or frequent ponding. Waste disposal shall not take place in a 100-year flood plain, coastal high-hazard area or wetland, as defined in Executive Order 11988, "Floodplain Management Guidelines."

5. Upstream drainage areas shall be minimized to decrease the amount of runoff which could erode or inundate waste disposal units.

6. This disposal site shall provide sufficient depth to the water table that ground water intrusion, perennial or otherwise, into the waste will not occur. The department will consider an exception to this requirement to allow disposal below the water table if it can be conclusively shown that disposal site characteristics will result in molecular diffusion being the predominant means of radionuclide movement and the rate of movement will result in the performance objectives being met. In no case will waste disposal be permitted in the zone of fluctuation of the water table.

7. The hydrogeologic unit used for disposal shall not discharge ground water to the surface within the disposal site.

8. Areas should be avoided where tectonic processes such as faulting, folding, seismic activity, or vulcanism may

occur with such frequency and extent to significantly affect the ability of the disposal site to meet the performance objectives of this Chapter or may preclude defensible modeling and prediction of long-term impacts.

9. Areas shall be avoided where surface geologic processes such as mass wasting, erosion, slumping, landsliding, or weathering occur with such frequency and extent to significantly affect the ability of the disposal site to meet the performance objectives of this Chapter, or may preclude defensible modeling and prediction of long-term impacts.

10. This disposal site must not be located where nearby facilities or activities could adversely impact the ability of the site to meet the performance objectives of this Chapter or significantly mask the environmental monitoring program.

AUTHORITY NOTE: Promulgated in accordance with R.S. 30:2001 et seq.

HISTORICAL NOTE: Promulgated by the Department of Environmental Quality, Nuclear Energy Division, LR 13:569 (October 1987), amended by the Office of Environmental Assessment, Environmental Planning Division, LR 26:2596 (November 2000).

§1324. Disposal Site Design for Land Disposal

A. Disposal Site Design for Near-Surface Disposal

1. Site design features shall be directed toward long-term isolation and avoidance of the need for continuing active maintenance after site closure.

2. The disposal site design and operation shall be compatible with the disposal site closure and stabilization plan and lead to disposal site closure that provides reasonable assurance that the performance objectives will be met.

3. The disposal site shall be designed to complement and improve, where appropriate, the ability of the disposal site's natural characteristics to assure that the performance objectives will be met.

4. Covers shall be designed to minimize to the extent practicable water infiltration, to direct percolating or surface water away from the disposed waste, and to resist degradation by surface geologic processes and biotic activity.

5. Surface features shall direct surface water drainage away from disposal units at velocities and gradients which will not result in erosion that will require ongoing active maintenance in the future.

6. The disposal site shall be designed to minimize to the extent practicable the contact of water with waste during storage, the contact of standing water with waste during disposal, and the contact of percolating or standing water with wastes after disposal.

AUTHORITY NOTE: Promulgated in accordance with R.S. 30:2001 et seq.

HISTORICAL NOTE: Promulgated by the Department of Environmental Quality, Nuclear Energy Division, LR 13:569 (October 1987).

§1325. Land Disposal Facility Operation and Disposal Site Closure

A. Near-Surface Disposal Facility Operation and Disposal Site Closure

1. Wastes designated as Class A pursuant to LAC 33:XV.438 shall be segregated from other wastes by placing in disposal units which are sufficiently separated from disposal units for the other waste classes so that any interaction between Class A wastes and other wastes will not result in the failure to meet the performance objectives of this Chapter. This segregation is not necessary for Class A wastes if they meet the stability requirements in LAC 33:XV.499.Appendix E, Paragraph B.2.

2. Wastes designated as Class C pursuant to LAC 33:XV.438 shall be disposed of so that the top of the waste is a minimum of 5 meters below the top surface of the cover or must be disposed of with intruder barriers that are designed to protect against an inadvertent intrusion for at least 500 years.

3. Except as provided in LAC 33:XV.1325.A.12, only waste classified as Class A, B, or C shall be acceptable for near-surface disposal. All waste shall be disposed of in accordance with requirements of LAC 33:XV.1325.A.4-11.

4. Wastes shall be emplaced in a manner that maintains the package integrity during emplacement, minimizes the void spaces between packages, and permits the void spaces to be filled.

5. Void spaces between waste packages shall be filled with earth or other material to reduce future subsidence within the fill.

6. Waste shall be placed and covered in a manner that limits the radiation dose rate at the surface of the cover to levels that at a minimum will permit the licensee to comply with all provisions of LAC 33:XV.414 at the time the license is transferred pursuant to LAC 33:XV.1316.

7. The boundaries and locations of each disposal unit shall be accurately located and mapped by means of a land survey. Near surface disposal units shall be marked in such a way that the boundaries of each unit can be easily defined. Three permanent survey marker control points, referenced to United States Geological Survey [USGS] or National Geodetic Survey [NGS] survey control stations, shall be established on the site to facilitate surveys. The USGS or NGS control stations shall provide horizontal and vertical controls as checked against USGS or NGS record files.

8. A buffer zone of land shall be maintained between any buried waste and the disposal site boundary and beneath the disposed waste. The buffer zone shall be of adequate dimensions to carry out environmental monitoring activities specified in LAC 33:XV.1326.D and take mitigative measures if needed.

9. Closure and stabilization measures as set forth in the approved site closure plan shall be carried out as each disposal unit is filled and covered.

10. Active waste disposal operations shall not have an adverse effect on completed closure and stabilization measures.

11. Only wastes containing or contaminated with radioactive material shall be disposed of at the disposal site.

12. Proposals for disposal of waste that is not generally acceptable for near-surface disposal because the waste form and disposal methods must be different and, in general, more stringent than those specified for Class C waste, may be submitted to the Office of Environmental Compliance, Emergency and Radiological Services Division, for approval.

AUTHORITY NOTE: Promulgated in accordance with R.S. 30:2001 et seq.

HISTORICAL NOTE: Promulgated by the Department of Environmental Quality, Nuclear Energy Division, LR 13:569 (October 1987), amended by the Office of Environmental Assessment, Environmental Planning Division, LR 26:2596 (November 2000), amended by the Office of the Secretary, Legal Affairs Division, LR 31:2535 (October 2005).

§1326. Environmental Monitoring

A. At the time a license application is submitted, the applicant shall have conducted a preoperational monitoring program to provide basic environmental data on the disposal site characteristics. The applicant shall obtain information about the ecology, meteorology, climate, hydrology, geology, geochemistry, and seismology of the disposal site. For those characteristics that are subject to seasonal variation, data must cover at least a 12-month period.

B. During the land disposal facility site construction and operation, the licensee shall maintain an environmental monitoring program. Measurements and observations must be made and recorded to provide data to evaluate the potential health and environmental impacts during both the construction and the operation of the facility and to enable the evaluation of long-term effects and the need for mitigative measures. The monitoring system must be capable of providing early warning of releases of waste from the disposal site before they leave the site boundary.

C. After the disposal site is closed, the licensee responsible for post-operational surveillance of the disposal site shall maintain a monitoring system based on the operating history and the closure and stabilization of the disposal site. The monitoring system must be capable of providing early warning of releases of waste from the disposal site before they leave the site boundary.

D. The licensee shall have plans for taking corrective measures if the environmental monitoring program detects migration of waste which would indicate that the performance objectives may not be met.

AUTHORITY NOTE: Promulgated in accordance with R.S. 30:2001 et seq.

HISTORICAL NOTE: Promulgated by the Department of Environmental Quality, Nuclear Energy Division, LR 13:569 (October 1987).

§1327. Alternative Requirements for Design and Operations

A. The department may, upon request or on its own initiative, authorize provisions other than those set forth in LAC 33:XV.1324-1326 for the segregation and disposal of waste and for the design and operation of a land disposal facility on a specific basis, if it finds reasonable assurance of compliance with the performance objectives of this Chapter.

AUTHORITY NOTE: Promulgated in accordance with R.S. 30:2001 et seq.

HISTORICAL NOTE: Promulgated by the Department of Environmental Quality, Nuclear Energy Division, LR 13:569 (October 1987), amended by the Office of Environmental Assessment, Environmental Planning Division, LR 26:2597 (November 2000).

§1328. Institutional Requirements

A. Land Ownership. Disposal of waste received from other persons may be permitted only on land owned in fee by the federal or a state government.

B. Institutional Control. The land owner or custodial agency shall conduct an institutional control program to physically control access to the disposal site following transfer of control of the disposal site from the disposal site operator. The institutional control program shall also include, but not be limited to, conducting an environmental monitoring program at the disposal site, periodic surveillance, minor custodial care, and other requirements as determined by the department, and administration of funds to cover the costs for these activities. The period of institutional controls will be determined by the department, but institutional controls may not be relied upon for more than 100 years following transfer of control of the disposal site to the owner.

AUTHORITY NOTE: Promulgated in accordance with R.S. 30:2001 et seq.

HISTORICAL NOTE: Promulgated by the Department of Environmental Quality, Nuclear Energy Division, LR 13:569 (October 1987), amended by the Office of Environmental Assessment, Environmental Planning Division, LR 26:2597 (November 2000).

§1329. Requirements for Waste Classification and Characteristics

A. Refer to LAC 33:XV.499.Appendix E.

AUTHORITY NOTE: Promulgated in accordance with R.S. 30:2001 et seq.

HISTORICAL NOTE: Promulgated by the Department of Environmental Quality, Nuclear Energy Division, LR 13:569 (October 1987), amended by the Office of Environmental Assessment, Environmental Planning Division, LR 28:1952 (September 2002).

Subchapter D. Financial Assurances

§1330. Applicant Qualifications and Assurances

A. Each applicant shall show that it either possesses the necessary funds or has reasonable assurance of obtaining the necessary funds, or by a combination of the two, to cover the estimated costs of conducting all licensed activities over the

planned operating life of the project, including costs of construction and disposal.

AUTHORITY NOTE: Promulgated in accordance with R.S. 30:2001 et seq.

HISTORICAL NOTE: Promulgated by the Department of Environmental Quality, Nuclear Energy Division, LR 13:569 (October 1987).

§1331. Funding for Disposal Site Closure and Stabilization

A. The applicant shall provide assurances prior to the commencement of operations that sufficient funds will be available to carry out disposal site closure and stabilization, including:

1. decontamination or dismantlement of land disposal facility structures; and

2. closure and stabilization of the disposal site so that following transfer of the disposal site to the site owner, the need for ongoing active maintenance is eliminated to the extent practicable and only minor custodial care, surveillance, and monitoring are required.

a. These assurances shall be based on department approved cost estimates reflecting the department approved plan for disposal site closure and stabilization. The applicant's cost estimates must take into account total costs that would be incurred if an independent contractor were hired to perform the closure and stabilization work.

B. In order to avoid unnecessary duplication and expense, the department will accept financial sureties that have been consolidated with earmarked financial or surety arrangements established to meet requirements of federal or other state agencies [and/or local governmental bodies] for such decontamination, closure, and stabilization. The department will accept these arrangements only if they are considered adequate to satisfy the requirements of LAC 33:XV.1331 and that the portion of the surety which covers the closure of the disposal site is clearly identified and committed for use in accomplishing these activities.

C. The licensee's financial or surety arrangement shall be submitted annually for review by the Office of Environmental Compliance, Emergency and Radiological Services Division, to ensure that sufficient funds will be available for completion of the closure plan.

D. The amount of the licensee's financial or surety arrangement shall change in accordance with changes in the predicted costs of closure and stabilization. Factors affecting closure and stabilization cost estimates include inflation, increases in the amount of disturbed land, changes in engineering plans, closure and stabilization that has already been accomplished, and any other conditions affecting costs. The financial or surety arrangement shall be sufficient at all times to cover the costs of closure and stabilization of the disposal units that are expected to be used before the next license renewal.

E. The financial or surety arrangement shall be written for a specified period of time and shall be automatically renewed unless the person who issues the surety notified the Office of Environmental Compliance, Emergency and Radiological Services Division, the beneficiary [the site owner], and the principal [the licensee] not less than 90 days prior to the renewal date of its intention not to renew. In such a situation, the licensee must submit a replacement surety within 30 days after notification of cancellation. If the licensee fails to provide a replacement surety acceptable to the department, the beneficiary may collect on the original surety.

F. Proof of forfeiture shall not be necessary to collect the surety so that, in the event that the licensee could not provide an acceptable replacement surety within the required time, the surety shall be automatically collected prior to its expiration. The conditions described above shall be clearly stated on any surety instrument.

G. Financial or surety arrangements generally acceptable to the department include surety bonds, cash deposits, certificates of deposit, deposits of government securities, escrow accounts, irrevocable letters or lines of credit, trust funds, and combinations of the above or such other types of arrangements as may be approved by the department. Self-insurance, or any arrangement which essentially constitutes self-insurance, will not satisfy the surety requirement for private sector applicants.

H. The licensee's financial or surety arrangement shall remain in effect until the closure and stabilization program has been completed and approved by the department, and the license has been transferred to the site owner.

AUTHORITY NOTE: Promulgated in accordance with R.S. 30:2001 et seq.

HISTORICAL NOTE: Promulgated by the Department of Environmental Quality, Nuclear Energy Division, LR 13:569 (October 1987), amended by the Office of Environmental Assessment, Environmental Planning Division, LR 26:2597 (November 2000), amended by the Office of the Secretary, Legal Affairs Division, LR 31:2535 (October 2005).

§1332. Financial Assurances for Institutional Controls

A. Prior to the issuance of the license, the applicant shall provide for Office of Environmental Compliance, Emergency and Radiological Services Division approval, a binding arrangement between the applicant and the disposal site owner that ensures that sufficient funds will be available to cover the costs of monitoring and any required maintenance during the institutional control period. The binding arrangement shall be reviewed annually by the department to ensure that changes in inflation, technology, and disposal facility operations are reflected in the arrangements.

B. Subsequent changes to the binding arrangement specified in Subsection A of this Section relevant to institutional control shall be submitted to the Office of Environmental Compliance, Emergency and Radiological Services Division, for prior approval.

AUTHORITY NOTE: Promulgated in accordance with R.S. 30:2001 et seq.

HISTORICAL NOTE: Promulgated by the Department of Environmental Quality, Nuclear Energy Division, LR 13:569 (October 1987), amended by the Office of Environmental Assessment, Environmental Planning Division, LR 26:2597 (November 2000), amended by the Office of the Secretary, Legal Affairs Division, LR 31:2535 (October 2005).

Subchapter E. Records, Reports, Tests, and Inspections

§1333. Maintenance of Records, Reports, and Transfers

A. Each licensee shall maintain any records and make any reports in connection with the licensed activities as may be required by the conditions of the license or by the rules, regulations, and orders of the department.

B. Records which are required by these regulations or by license conditions shall be maintained for a period specified by the appropriate regulations or by license condition. If a retention period is not otherwise specified, these records must be maintained and transferred to the officials specified in LAC 33:XV.1333.D as a condition of license termination unless the department otherwise authorizes their disposition.

C. Records which shall be maintained in accordance with this Chapter may be the original or a reproduced copy or microfilm if this reproduced copy or microfilm is capable of producing copy that is clear and legible at the end of the required retention period. The record may also be stored in electronic media with the capability of producing legible, accurate, and complete records during the required retention period. Records such as letters, drawings, and specifications, shall include all pertinent information such as stamps, initials, and signatures. The licensee shall maintain adequate safeguards against tampering with and loss of records.

D. Notwithstanding Subsections A-C of this Section, copies of records of the location and the quantity of radioactive wastes contained in the disposal site shall be transferred upon license termination to the chief executive of the nearest municipality, the chief executive of the parish in which the facility is located, the parish zoning board or land development and planning agency, the state governor, and other state, local, and federal governmental agencies as designated by the department at the time of license termination.

E. Following receipt and acceptance of a shipment of radioactive waste, the licensee shall record the date of disposal of the waste, the date that the shipment is received at the disposal facility, a traceable shipment manifest number, a description of any engineered barrier or structural overpack provided for disposal of the waste, the location of disposal at the disposal site, the containment integrity of the waste packages as received, any discrepancies between materials listed on the manifest and those received, the volume of any pallets, bracing, or other shipping or on-site generated materials that are contaminated and are disposed of as contaminated or suspect materials, and any evidence of leaking or damaged packages or radiation or contamination levels in excess of limits specified in U.S. Department of Transportation and department regulations. The licensee shall briefly describe any repackaging operations of any of the waste packages included in the shipment, plus any other information required by the department as a license condition. The licensee shall retain these records until the department transfers or terminates the license that authorizes the activities described in this Section.

F. Each licensee authorized to dispose of waste received from other persons shall file a copy of its financial report or a certified financial statement annually with the Office of Environmental Compliance, Emergency and Radiological Services Division, in order to update the information base for determining financial qualifications.

G. Each licensee authorized to dispose of waste received from other persons, in accordance with this Chapter, shall submit annual reports to the Office of Environmental Compliance, Emergency and Radiological Services Division. Reports shall be submitted by the end of the first calendar quarter of each year for the preceding year.

1. The reports shall include:

a. specification of the quantity of each of the principal contaminants released to unrestricted areas in liquid and in airborne effluents during the preceding year;

b. the results of the environmental monitoring program;

c. a summary of licensee disposal unit survey and maintenance activities;

d. a summary, by waste class, of activities and quantities of radionuclides disposed of;

e. any instances in which observed site characteristics were significantly different from those described in the application for a license; and

f. any other information the department may require.

2. If the quantities of waste released during the reporting period, monitoring results, or maintenance performed are significantly different from those expected in the materials previously viewed as part of the licensing action, the report shall cover this specifically.

H. If there is a conflict between the department's regulations in this Chapter, license condition, or other written department approval or authorization pertaining to the retention period for the same type of record, the longest retention period specified takes precedence.

I. Any transfer of radioactive materials by the licensee is subject to the requirements in LAC 33:XV.340.

J. In addition to the other requirements of this Section, the licensee shall store, or have stored, manifest and other information pertaining to receipt and disposal of radioactive waste in an electronic recordkeeping system.

1. The manifest information that shall be electronically stored is:

a. that required in LAC 33:XV.499.Appendix D, with the exception of shipper and carrier telephone numbers and shipper and consignee certifications; and

b. that information required in Subsection E of this Section.

2. If specified in facility license conditions, the licensee shall report the stored information, or subsets of this information, on a *computer-readable medium*, as defined in LAC 33:XV.499.Appendix D.

AUTHORITY NOTE: Promulgated in accordance with R.S. 30:2001 et seq.

HISTORICAL NOTE: Promulgated by the Department of Environmental Quality, Nuclear Energy Division, LR 13:569 (October 1987), amended by the Office of Air Quality and Radiation Protection, Radiation Protection Division, LR 24:2111 (November 1998), amended by the Office of Environmental Assessment, Environmental Planning Division, LR 26:2598 (November 2000), LR 27:1238 (August 2001), amended by the Office of the Secretary, Legal Affairs Division, LR 31:2535 (October 2005).

§1334. Tests on Land Disposal Facilities

Each licensee shall perform, or permit the department to perform, any tests the department deems appropriate or necessary for the administration of the regulations in this Chapter, including, but not limited to, tests of:

A. wastes;

B. facilities used for the receipt, storage, treatment, handling or disposal of wastes;

C. radiation detection and monitoring instruments; or

D. other equipment and devices used in connection with the receipt, possession, handling, treatment, storage, or disposal of waste.

AUTHORITY NOTE: Promulgated in accordance with R.S. 30:2001 et seq.

HISTORICAL NOTE: Promulgated by the Department of Environmental Quality, Nuclear Energy Division, LR 13:569 (October 1987), amended by the Office of Environmental Assessment, Environmental Planning Division, LR 26:2598 (November 2000).

§1335. Department Inspections of Land Disposal Facilities

A. Each licensee shall afford to the department at all reasonable times opportunity to inspect waste not yet disposed of, and the premises, equipment, operations, and facilities in which wastes are received, possessed, handled, treated, stored, or disposed of.

B. Each licensee shall make available to the department for inspection, upon reasonable notice, records kept by it pursuant to these regulations. Authorized representatives of the department may copy and take away copies of, for the division's use, any record required to be kept pursuant to these regulations.

AUTHORITY NOTE: Promulgated in accordance with R.S. 30:2001 et seq.

HISTORICAL NOTE: Promulgated by the Department of Environmental Quality, Nuclear Energy Division, LR 13:569 (October 1987), amended by the Office of Environmental Assessment, Environmental Planning Division, LR 26:2598 (November 2000).

Chapter 14. Regulation and Licensing of Naturally Occurring Radioactive Material (NORM)

§1401. Purpose

A. The regulations in this Chapter establish radiation health and safety requirements for the possession, use, transfer, treatment, storage, and disposal of Naturally Occurring Radioactive Material (NORM) and the recycling of NORM contaminated equipment that does not include source, special nuclear, or byproduct materials regulated pursuant to the licensing requirements in LAC 33:XV.Chapter 3. The requirements of this Chapter are in addition to, and not in substitution for, the applicable requirements of LAC 33:XV.Chapters 1, 3, 4, 10, 15, and 25.

AUTHORITY NOTE: Promulgated in accordance with R.S. 30:2001 et seq.

HISTORICAL NOTE: Promulgated by the Department of Environmental Quality, Office of Air Quality and Nuclear Energy, Nuclear Energy Division, LR 15:735 (September 1989), amended by the Office of Air Quality and Radiation Protection, Radiation Protection Division, LR 18:604 (June 1992), LR 21:24 (January 1995).

§1402. Scope

A. These regulations apply to any person who engages in waste generation, extraction, mining, beneficiating, processing, possession, use, transfer, treatment, transportation, or disposal of NORM or recycling of NORM contaminated equipment in such a manner as to technologically alter the natural sources of radiation or their potential exposure pathways to humans.

B. These regulations also apply to any material, equipment, or land which has been contaminated with technologically enhanced NORM.

C. The regulations in this Chapter address the introduction of NORM into materials or products in which neither the NORM nor the radiation emitted from the NORM is considered by the administrative authority to be advantageous to the materials or products. The manufacture and distribution of materials or products containing NORM in which the NORM and/or its associated radiation(s) is considered to be an advantageous attribute are licensed under the provisions of LAC 33:XV.Chapter 3.

D. This Chapter also addresses waste generation, waste management, decontamination, treatment, transfer, storage, and disposal of NORM and NORM waste with regard to both inactive and active sites and facilities involved in storage and/or cleaning of tubular goods and contaminated equipment.

AUTHORITY NOTE: Promulgated in accordance with R.S. 30:2001 et seq.

HISTORICAL NOTE: Promulgated by the Department of Environmental Quality, Office of Air Quality and Nuclear Energy, Nuclear Energy Division, LR 15:735 (September 1989), amended by the Office of Air Quality and Radiation Protection, Radiation Protection Division, LR 18:604 (June 1992), LR 21:24 (January 1995).

§1403. Definitions

A. In addition to the definitions specified in Chapter 1, the following definitions apply.

Advantageous Attribute or Advantageous to the Material or Product—the radioactivity of the product is necessary to the use of the product.

Beneficiating—the processing of materials or products for the purpose of altering the chemical or physical properties to improve the quality, purity, or assay of a desired product or material.

Confirmatory Survey—a survey of potentially contaminated land, equipment, or sites in order to establish, with reasonable certainty, the absence or magnitude of NORM contamination.

Container—any portable device in which a material is stored, transported, treated, disposed of, or otherwise handled. This does not include tubular goods or drill pipe for labeling purposes under these regulations.

Decontamination—the act of removing regulated NORM to reduce levels of radiation.

Disposal—the discharge, injection, or placing of regulated NORM into or on land so that such material is isolated from the biosphere inhabited by man and containing his food chain.

Equipment—any apparatus associated with the potential for or actual enhancement of NORM. Examples include, but are not limited to, tubular goods, piping, vessels, wellheads, separators, and condensers.

Location—NORM contaminated site(s), such as a commingling facility, a wellhead, a tank battery, any other type of production facility for oil or gas, a warehouse, or other type of NORM storage area for equipment or drums, pipeline, land, or pipeyard. A location may contain several sites.

Naturally Occurring Radioactive Material (NORM)—any nuclide that is radioactive in its natural physical state (i.e., not man-made), but not including source, byproduct, or special nuclear material.

NORM Waste—the radioactive residue from any operation where the purpose is to remove NORM from soil, materials, or equipment.

On-Site Maintenance—any activity involving a site or equipment that subjects an individual to potential inhalation or ingestion of NORM. This includes, but is not limited to, performing maintenance on vessels, tanks, tubular goods, or water treatment systems, or the clearing of pipe lines to maintain oil and gas production.

Pile—any non-containerized accumulation of solid, nonflowing NORM waste.

Product—anything produced, made, manufactured, refined, or beneficiated.

Recycling—a process by which materials that have served their intended use are collected, separated, or processed and returned to use in the form of raw materials in the production of new products. Recycling shall not include the use of a material in a manner that constitutes disposal.

Site—any part of a location, land area (e.g., well site, pipeyard, scrapyard, production pit, treater/disposal facility, landfarm, landfill), equipment (each wellhead, each tank, each vessel, each separator, or any other apparatus associated with a process that has technologically enhanced naturally occurring radioactive material) or other appurtenances in a facility that contain technologically enhanced NORM, both active and inactive.

Storage—the containment of NORM waste in such a manner as not to constitute disposal of NORM waste.

Tank—a stationary device designed to contain an accumulation of NORM waste that is constructed primarily of nonearthen materials (e.g., wood, concrete, steel, plastic) that provide structural support and integrity.

*Technologically Enhanced Natural Radioactive Material (*hereinafter referred to as *TENR)*—means natural sources of radiation which would not normally appear without some technological activity not expressly designed to produce radiation.

Temporary Jobsite—any location where services subject to specific licensure are performed, other than the authorized location(s) listed in the specific license.

Treatment—any method, technique, or process designed to change the physical or radiological character or composition of any NORM or NORM waste so as to render it less radioactive, safer for transport, amenable for recovery, amenable for storage, reduced in volume, or changed in concentration.

Unrestricted Use—any use that does not have controls in place to protect an individual member of the public from exposure to radiation and radioactive material.

AUTHORITY NOTE: Promulgated in accordance with R.S. 30:2001 et seq.

HISTORICAL NOTE: Promulgated by the Department of Environmental Quality, Office of Air Quality and Nuclear Energy, Nuclear Energy Division, LR 15:736 (September 1989), amended by the Office of Air Quality and Radiation Protection, Radiation Protection Division, LR 18:604 (June 1992), LR 21:24 (January 1995).

§1404. Exemptions

A. NORM, NORM waste, and NORM contaminated material are exempt from the requirements of these regulations if they contain, or are contaminated at, concentrations of:

1. 5 picocuries per gram or less of radium-226 or radium-228, above background; or

2. 150 picocuries per gram of any other NORM radionuclide, provided that these concentrations are not exceeded at any time.

B. Equipment, which contains NORM, is exempt from the requirements of these regulations, except LAC 33:XV.1410, if the maximum radiation exposure level does not exceed 50 microroentgens per hour at any accessible point.

C. Except as provided in LAC 33:XV.1408, 1410, and 1417, land is exempt from the requirements of this Chapter if it contains material at concentrations less than the limits specified below, in samples averaged over any 100 square meters with no single noncomposited sample to exceed 60 picocuries per gram of soil:

1. 5 picocuries per gram or less of radium-226 or radium-228, above background, averaged over the first 15 centimeters, and 15 picocuries per gram above background averaged over each subsequent 15-centimeter-thick layer of soil; or

2. 30 picocuries per gram or less of radium-226 or radium-228, averaged over 15-centimeter-depth increments, provided the total effective dose equivalent (from the contaminated land) to individual members of the public (continually present) does not exceed 0.1 rem (1mSv) in a year.

D. The department may on a case by case basis approve alternate limits or measurement procedures for an exemption under LAC 33:XV:1404.A, B, or C.

E. Persons who receive source material, as authorized under the general license in LAC 33:XV.321.A, and products or materials containing NORM, distributed in accordance with a specific license issued by the department or an equivalent license issued by another licensing state, are exempt from these regulations.

F. Persons who receive, possess, store, use, process, transfer, sell, manufacture, distribute, recycle, or dispose of raw materials, intermediates, process streams, products, byproducts (including bauxite refinery and phosphogypsum recycle/reuse raw materials and products), and wastes related to the production of bauxite refinery and phosphate fertilizer materials, products, and byproducts are exempt from these regulations.

G. The recycling of NORM contaminated equipment and the manufacturing, distribution, use, transportation, and disposal of the following products/materials are exempt from the requirements of these regulations:

1. potassium and potassium compounds that have not been isotopically enriched in the radionuclide K-40;

2. materials used for building construction, industrial processes, metal casings, and abrasive cleaning if the NORM content of such material has not been technologically enhanced; and

3. byproducts from fossil fuel combustion (bottom ash, fly ash, and flue-gas emission control byproducts).

H. The wholesale and retail distribution (including custom blending), possession, use, and transportation of the following products/materials are exempt from the requirements of these regulations:

1. phosphate and potash fertilizer;

2. phosphogypsum for agricultural uses;

3. materials used for building construction if such materials contain NORM that has not been technologically enhanced;

4. natural gas and natural gas products; and

5. crude oil and crude oil products.

I. Produced waters from crude oil and natural gas production are exempt from the requirements of these regulations. Regulations concerning produced waters are referenced in LAC 33:IX.Chapter 7.

J. Tanks, vessels, containers, storage facilities, and distribution lines in refineries and petrochemical and gas plants contaminated with regulated NORM are not exempt from the requirements of these regulations.

AUTHORITY NOTE: Promulgated in accordance with R.S. 30:2001 et seq.

HISTORICAL NOTE: Promulgated by the Department of Environmental Quality, Office of Air Quality and Nuclear Energy, Nuclear Energy Division, LR 15:736 (September 1989), amended by the Office of Air Quality and Radiation Protection, Radiation Protection Division, LR 18:605 (June 1992), LR 21:25 (January 1995), amended by the Office of Environmental Assessment, Environmental Planning Division, LR 26:2599 (November 2000).

§1406. Radiation Survey Instruments

A. Instrumentation utilized to determine exposure rates pursuant to this Chapter shall be capable of measuring 1 microroentgen per hour through at least 500 microroentgens per hour.

B. Each radiation survey instrument shall be calibrated:

1. at intervals not to exceed one year, any time the instrument is found to respond inconsistently to a known source or shows any indication of physical damage, and after each instrument servicing;

2. at energies and radiation levels appropriate for use; and

3. so that accuracy within plus or minus 20 percent of the true radiation level can be demonstrated on each scale.

AUTHORITY NOTE: Promulgated in accordance with R.S. 30:2001 et seq.

HISTORICAL NOTE: Promulgated by the Department of Environmental Quality, Office of Air Quality and Nuclear Energy, Nuclear Energy Division, LR 15:736 (September 1989), amended by the Office of Air Quality and Radiation Protection, Radiation Protection Division, LR 18:605 (June 1992), LR 21:25 (January 1995).

§1407. Surveys

A. A confirmatory survey for each potentially contaminated site shall be performed within 90 days of the effective date of these regulations.

B. Follow-up confirmatory surveys shall be performed whenever activities at the site could result in a possible change in the regulatory status of the site.

C. Upon completion of survey(s) of equipment and facilities that verify that NORM regulated by this Chapter is not present, an individual may submit documentation to the Office of Environmental Compliance, Emergency and Radiological Services Division, indicating that the equipment and facilities are exempt from the requirements of this Chapter pursuant to LAC 33:XV.1404.

D. Any survey submitted to the department must include the qualifications of the individual performing the survey. Individuals performing and documenting the surveys shall demonstrate understanding of the subjects outlined in LAC 33:XV.1499.Appendix A.

AUTHORITY NOTE: Promulgated in accordance with R.S. 30:2001 et seq.

HISTORICAL NOTE: Promulgated by the Department of Environmental Quality, Office of Air Quality and Radiation Protection, Radiation Protection Division, LR 21:26 (January 1995), amended by the Office of Environmental Assessment, Environmental Planning Division, LR 26:2599 (November 2000), amended by the Office of the Secretary, Legal Affairs Division, LR 31:2536 (October 2005).

§1408. General License

A. A general license is hereby issued to mine, extract, receive, possess, own, use, store, and transfer NORM not exempt in LAC 33:XV.1404 without regard to quantity.

1. Persons subject to the general license shall notify the Office of Environmental Compliance, Emergency and Radiological Services Division, by filing the Notification of NORM Form (Form RPD-36) with the department.

2. A confirmatory survey showing the presence of NORM in excess of exempt levels provided in LAC 33:XV.1404 shall be submitted to the Office of Environmental Compliance, Emergency and Radiological Services Division.

3. Each general licensee performing on-site maintenance on contaminated facilities, sites, or equipment or the excavation of land shall establish and submit to the Office of Environmental Compliance, Emergency and Radiological Services Division, for approval written procedures as outlined in LAC 33:XV.1499.Appendix B to ensure worker protection and for the survey (or screening) of sites and equipment.

4. On-site maintenance is authorized only if the maximum radiation level does not exceed 2 millirem per hour at any accessible point in the work area.

5. Each general licensee shall establish and submit to the Office of Environmental Compliance, Emergency and Radiological Services Division, for approval written procedures for the survey (or screening) of sites and equipment to ensure that NORM is not released for unrestricted use except under the provisions of LAC 33:XV.1417.

6. Storage

a. A general licensee is authorized to store NORM waste in a container for 90 days from the date of generation. After such time, the NORM waste must be transferred to an authorized facility for purposes of treatment, storage, or disposal.

b. To store NORM waste in a container for up to 365 days from generation, a general licensee must first submit a written NORM waste management plan to the Office of Environmental Compliance, Emergency and Radiological Services Division, and receive authorization from the department. The general licensee may store NORM waste in containers up to 365 days from generation under the written NORM waste management plan while waiting for department determination.

7. Surface equipment that has been removed from service and is not employed for its designated function, excluding wellheads, shall be decontaminated to the limits specified in LAC 33:XV.1404, or treated or disposed of in accordance with LAC 33:XV.1412 within one year from the date the equipment was removed from service. This requirement does not apply to equipment that remains subsurface and is associated with production wells or injection wells classified as having future utility.

B. This general license does not authorize the manufacturing or distribution of products containing NORM, or the landfarming of NORM, or the transfer from one general licensee to another general licensee of NORM with levels or concentrations greater than those specified in LAC 33:XV.1404 for purposes of decontamination or disposal.

C. The decontamination for release for unrestricted use of contaminated facilities, sites, or equipment shall only be performed by persons specifically licensed by the department, the U.S. Nuclear Regulatory Commission, another agreement state, or another licensing state to conduct such work or as otherwise authorized by the department.

D. The general license provided in this Section does not authorize the cleaning of tubular goods and equipment in connection with a pipe yard, storage yard, or equipment yard.

E. Facilities, equipment, and sites contaminated with NORM in excess of the levels set forth in LAC 33:XV.1404 shall not be released for unrestricted use.

AUTHORITY NOTE: Promulgated in accordance with R.S. 30:2001 et seq.

HISTORICAL NOTE: Promulgated by the Department of Environmental Quality, Office of Air Quality and Radiation Protection, Radiation Protection Division, LR 21:26 (January 1995), amended by the Office of Environmental Assessment, Environmental Planning Division, LR 26:2599 (November 2000),

amended by the Office of the Secretary, Legal Affairs Division, LR 31:2536 (October 2005).

§1410. General Licenses: Pipe Yards, Storage Yards, or Production Equipment Yards

A. A general license is hereby issued for pipe yards or storage yards or production equipment yards to receive, possess, process, and clean tubular goods or equipment that are contaminated with scale or residue but do not exceed 50 microroentgens per hour, provided:

1. the department is notified at least 90 days prior to receipt of tubular goods or equipment that are contaminated with scale or residue but do not exceed 50 microroentgens per hour;

2. a program is developed and submitted to the Office of Environmental Compliance, Emergency and Radiological Services Division, for approval to screen incoming shipments to ensure that the 50-microroentgens-per-hour limit is not exceeded for individual pieces of tubular goods or equipment;

3. a program is developed and submitted to the Office of Environmental Compliance, Emergency and Radiological Services Division, for approval to ensure worker protection, as outlined in LAC 33:XV.1499.Appendix B;

4. a program is developed and submitted to the Office of Environmental Compliance, Emergency and Radiological Services Division, for approval to control soil contamination;

5. a program is developed and submitted to the Office of Environmental Compliance, Emergency and Radiological Services Division, for approval to prevent release of NORM contamination beyond the site boundary;

6. a program is developed and submitted to the Office of Environmental Compliance, Emergency and Radiological Services Division, for approval for surveying and decontamination to ensure that soil contamination is not allowed to exceed 200 picocuries per gram of radium-226 or radium-228 or an exposure rate of 50 microroentgens per hour at one meter from the soil at any time;

7. a plan for cleanup is submitted to the Office of Environmental Compliance, Emergency and Radiological Services Division, within 180 days of the discovery of NORM contaminated soil in excess of the limit in Paragraph A.6 of this Section. The plan shall include a schedule for cleanup that is to be approved by the department. The general licensee may include in this plan an application to the department for a one time authorization to perform this cleanup or use a specific licensee; and

8. before releasing the property for unrestricted use, the soil is decontaminated to a level not to exceed 5 picocuries per gram above background of radium-226 or radium-228 unless other limits are approved by the department.

B. A specific license pursuant to LAC 33:XV.Chapter 3 is required for the decontamination of tubular goods or equipment that exceed the 50-microroentgens-per-hour limit.

AUTHORITY NOTE: Promulgated in accordance with R.S. 30:2001 et seq.

HISTORICAL NOTE: Promulgated by the Department of Environmental Quality, Office of Air Quality and Nuclear Energy, Nuclear Energy Division, LR 15:736 (September 1989), amended by the Office of Air Quality and Radiation Protection, Radiation Protection Division, LR 18:605 (June 1992), LR 21:26 (January 1995), amended by the Office of Environmental Assessment, Environmental Planning Division, LR 26:2599 (November 2000), LR 30:1189 (June 2004), amended by the Office of the Secretary, Legal Affairs Division, LR 31:2536 (October 2005).

§1411. Protection of Workers during Operations

A. Each person subject to the general license requirements in LAC 33:XV.1408 or 1410 or a specific license shall conduct operations in compliance with each of the standards for radiation protection set forth in LAC 33:XV.Chapters 4 and 10.

AUTHORITY NOTE: Promulgated in accordance with R.S. 30:2001 et seq.

HISTORICAL NOTE: Promulgated by the Department of Environmental Quality, Office of Air Quality and Nuclear Energy, Nuclear Energy Division, LR 15:737 (September 1989), amended by the Office of Air Quality and Radiation Protection, Radiation Protection Division, LR 18:606 (June 1992), LR 21:27 (January 1995).

§1412. Treatment, Transfer, and Disposal

A. Each person subject to the general license requirements in LAC 33:XV.1408 and 1410 or subject to a specific license shall manage, treat or dispose of wastes containing NORM in accordance with:

1. any applicable requirement of LAC 33:XV.Chapter 4; and

2. any applicable requirement of the U.S. Environmental Protection Agency for disposal of such wastes.

B. Treatment or disposal of NORM waste shall be in accordance with one of the following:

1. by transfer of the wastes to a land disposal facility licensed by the department, the U.S. Nuclear Regulatory Commission, an agreement state, or a licensing state;

2. by alternate methods authorized by the department in writing upon application or upon the department's initiative. The application for alternative methods of disposal shall be submitted to the department for approval;

3. for nonhazardous oilfield waste containing NORM at concentrations not exceeding 30 picocuries per gram of radium-226 or radium-228 by transfer to a nonhazardous oilfield waste commercial facility regulated by the Department of Natural Resources for treatment if the following are met:

a. dilution in the end product after treatment does not exceed 5 picocuries per gram above background of radium-226 or radium-228;

b. the nonhazardous oilfield waste commercial facility has a program for screening incoming shipments to

ensure that the 30 picocuries per gram limit of radium-226 or radium-228 is not exceeded; and

c. the Department of Natural Resources (DNR) approves; or

4. for nonhazardous oilfield waste containing concentrations of NORM in excess of the limits in LAC 33:XV.1404.A.1, but not exceeding 200 picocuries per gram of radium-226 or radium-228 and daughter products, by treatment at nonhazardous oilfield waste commercial facilities specifically licensed by the department for such purposes. Regulation of such sites is set forth in a memorandum of understanding between the department and DNR and contained in LAC 33XV.1499.Appendix C.

C. Intrastate transfers of waste containing NORM for disposal shall be made only to persons authorized by the department in writing to receive such waste. It is the responsibility of the transferor to ascertain that the recipient possesses specific authorization prior to transfer.

D. The melting of scrap metal may be authorized by a specific license if the dilution of the NORM in the end products or melt byproducts is sufficient to reduce the concentrations of radium-226 or radium-228 to less than 5 picocuries per gram.

AUTHORITY NOTE: Promulgated in accordance with R.S. 30:2001 et seq.
HISTORICAL NOTE: Promulgated by the Department of Environmental Quality, Office of Air Quality and Radiation Protection, Radiation Protection Division, LR 18:606 (June 1992), amended LR 21:27 (January 1995), amended by the Office of Environmental Assessment, Environmental Planning Division, LR 26:2600 (November 2000).

§1414. Containers

A. NORM and NORM waste shall be kept in a container that is in good or safe condition.

B. The licensee shall use a container made of, or lined with, materials that will not react with, or be incompatible with, the NORM waste to be stored so that the ability of the container to contain the waste is not impaired or compromised.

C. A container holding NORM waste shall always be closed and sealed during storage, except when it is necessary to add or remove waste.

D. A container holding NORM waste shall not be opened, handled, or stored in a manner that may rupture the container or cause it to leak.

E. At least quarterly, the licensee shall inspect areas where containers of NORM waste are stored, looking for leaking containers and for deterioration of containers and the containment system. Records of these inspections shall be made.

F. All containers of NORM waste shall be stacked in such a fashion that each container identification label can be read from the access aisle or area. Labeling of containers shall be in compliance with LAC:XV.453.

G. Records of inspections pursuant to LAC 33:XV.1414.E shall be maintained by the licensee for inspection by the department for five years.

AUTHORITY NOTE: Promulgated in accordance with R.S. 30:2001 et seq.
HISTORICAL NOTE: Promulgated by the Department of Environmental Quality, Office of Air Quality and Radiation Protection, Radiation Protection Division, LR 18:607 (June 1992), amended LR 21:27 (January 1995), amended by the Office of Environmental Assessment, Environmental Planning Division, LR 26:2600 (November 2000).

§1415. Waste Piles

A. Storage of new NORM waste by piles is prohibited. No new NORM waste piles can be initiated and no existing NORM waste piles added to after the effective date of these regulations.

AUTHORITY NOTE: Promulgated in accordance with R.S. 30:2001 et seq.
HISTORICAL NOTE: Promulgated by the Department of Environmental Quality, Office of Air Quality and Radiation Protection, Radiation Protection Division, LR 18:607 (June 1992).

§1416. Inspections of Storage Tanks Containing NORM Waste

A. As part of an inspection program the licensee shall develop a schedule and procedure for assessing the condition of each tank containing NORM waste. The schedule and procedure must be adequate to detect cracks, leaks, corrosion, and erosion that may lead to cracks, leaks, or wall thinning to less than the required thickness. Procedures for emptying a tank to allow entry, procedures for personnel protection, and inspection of the interior must be established when necessary to detect corrosion or erosion of the tank sides and bottom. The frequency of these assessments must be based on the material of construction of the tank, type of corrosion or erosion protection used, rate of corrosion or erosion observed during previous inspections, and the characteristics of the waste being treated or stored.

AUTHORITY NOTE: Promulgated in accordance with R.S. 30:2001 et seq.
HISTORICAL NOTE: Promulgated by the Department of Environmental Quality, Office of Air Quality and Radiation Protection, Radiation Protection Division, LR 18:607 (June 1992), amended LR 21:28 (January 1995).

§1417. Release for Unrestricted Use

A. Once facilities, equipment or sites exceed the level of contamination provided in LAC 33:XV.1404 and are subject to the provisions of this Chapter, they shall not be released for unrestricted use until they have been decontaminated in accordance with this Section.

1. For general or specific licensees that have an area or soil with contamination above the limits of LAC 33:XV.1404 and soil decontamination must be performed, the decontamination of soil shall be to 5 picocuries per gram above background of radium-226 or radium-228.

2. For general or specific licensees who have equipment with a maximum exposure level above that specified in LAC 33:XV.1404, equipment decontamination

must be performed to reduce the exposure levels below those specified in LAC 33:XV.1404 and ensure that the equipment is free of loose contamination.

3. In all other cases, the decontamination shall reduce radiation levels below the exemption levels provided in LAC 33:XV.1404.

B. If closure activities involve construction with a subsurface impact to a depth greater than three feet, prior approval by the Office of Environmental Compliance, Emergency and Radiological Services Division, must be attached as part of the application addressing the certification of the groundwater quality. All pits, ponds, and lagoons must comply with departmental regulations and/or policies dealing with groundwater quality.

C. Unless otherwise directed in writing by the department, in order to release property for unrestricted use, a licensee shall submit a plan for the decontamination to the Office of Environmental Compliance, Emergency and Radiological Services Division, for approval. Upon approval, the licensee shall implement the plan in accordance with such approval.

1. Information contained in previous applications, statements, or reports filed with the department under the license may be incorporated by reference if the references are clear and specific.

2. The plan shall provide for a confirmatory survey submitted to the department for review.

3. The licensee shall provide notice to the department of completion of decontamination. Upon proper completion of the plan and notice to the department, the department shall acknowledge such completion.

4. The site shall not be released for unrestricted use until the acknowledgment in LAC 33:XV.1417.C.3 is issued.

D. The closure application shall include specific details of the NORM site closure plan including each of the following:

1. the results of tests, experiments, or any other analyses relating to backfill of excavated areas, closure and sealing;

2. any proposed revision of plans for:

a. decontamination and/or dismantlement of surface facilities;

b. backfilling of excavated areas; and/or

c. stabilization of the NORM site for post-closure care; and

3. any new information regarding the environmental impact of closure activities and long-term performance of the NORM site.

E. The licensee shall monitor the NORM site and perform necessary maintenance and repairs at the site until the acknowledgement in LAC 33:XV.1417.C.3 is issued.

AUTHORITY NOTE: Promulgated in accordance with R.S. 30:2001 et seq.

HISTORICAL NOTE: Promulgated by the Department of Environmental Quality, Office of Air Quality and Radiation Protection, Radiation Protection Division, LR 18:607 (June 1992), amended LR 21:28 (January 1995), amended by the Office of Environmental Assessment, Environmental Planning Division, LR 26:2600 (November 2000), amended by the Office of the Secretary, Legal Affairs Division, LR 31:2537 (October 2005).

§1418. NORM Manifests

A. Each shipment of NORM waste and NORM contaminated equipment to a facility specifically licensed for treatment, decontamination, storage, or disposal shall be accompanied by a manifest.

B. The manifest form must be obtained from the department and must consist of, at a minimum, the number of copies that will provide the licensee, each transporter, and the operator of the designated facility with one copy each for their records with the remaining copies to be returned to the licensee and the other appropriate parties.

C. General Requirements

1. A licensee who transports, or offers for transportation, NORM waste and NORM contaminated equipment to a facility specifically licensed for treatment, decontamination, storage, or disposal must prepare and sign sufficient copies of a manifest before transporting the NORM off-site.

2. A licensee must designate on the manifest one facility which is permitted to handle the NORM described on the manifest.

3. If the transporter is unable to deliver the NORM to the designated facility, the licensee must either designate another facility or instruct the transporter to return the NORM.

4. Licensees must provide a statement concerning the nature of the material and general guidelines for an emergency situation involving this waste to accompany the manifest on shipments and loads.

5. If the NORM is to be transported out-of-state, the licensee will be responsible for receiving the completed, signed manifest from the out-of-state treatment, decontamination, storage, or disposal facility.

6. Before initiating a shipment, licensees shall obtain written confirmation of the acceptability of the NORM or NORM waste from the operation of the specifically licensed commercial treatment, decontamination, storage, or disposal facility. The confirmation must be maintained by the affected licensees as part of their manifest records.

7. The licensee receiving a shipment is required to report to the Office of Environmental Compliance, Emergency and Radiological Services Division, and to the licensee initiating the shipment any irregularities between the NORM actually received by the designated facility and the NORM described on the manifest, or any other irregularities, within 15 days. If the designated facility or

receiving licensee is outside the state of Louisiana, the generating or originating licensee must report the irregularities to the department.

D. Required Information

1. The manifest must contain all of the following information prior to leaving the licensee's site:

a. a state manifest document which shall be obtained from the department;

b. the licensee's name, mailing address, telephone number, and NORM general license number;

c. the name, Interstate Commerce Commission number (ICC #), and telephone number of each transporter;

d. the name, address, telephone number, and NORM specific license number of the designated facility, if applicable;

e. the description of the waste(s) (e.g., scale, soil, sludge) or contaminated equipment (e.g., heater treater, tubular goods);

f. the total quantity of all NORM by units of weight in tons or pounds, and the type and number of containers (metal drums, barrels, kegs, fiberboard or plastic drums, cargo tanks, tank trucks, dump trucks, metal boxes, cartons, cases, burlap bags, paper bags, plastic bags, wooden drums, tanks portable, tank cars, cylinders, wooden boxes, and fiber or plastic boxes) as loaded into or onto the transport vehicle. If the weight is unknown, the volume and estimated weight should be provided.

2. The certification that appears on the manifest must be read, signed, and dated by the licensee as follows: "I hereby declare that the contents of this consignment are fully and accurately described above by proper shipping name and are classified, packed, marked, and labeled, and are in all respects in proper condition for transport according to applicable international and national government regulations."

E. Use of the Manifest

1. The licensee must:

a. sign and date the manifest certification by hand when the initial transporter accepts the shipment;

b. obtain the handwritten signature of the initial transporter and date of acceptance of the manifest; and

c. retain one copy.

2. The licensee must give the transporter the remaining copies of the manifest.

3. The licensee must receive the fully signed copy of the manifest from the designated facility within 45 days from the delivery to the initial transporter. In the event the licensee does not receive the signed manifest timely, the licensee shall:

a. notify the Office of Environmental Compliance, Emergency and Radiological Services Division, in writing within seven days;

b. conduct an investigation into the reasons why the manifest was not received;

c. report the results of the investigation to the Office of Environmental Compliance, Emergency and Radiological Services Division.

F. Transporters

1. A transporter may not accept NORM for transportation unless the NORM is accompanied by sufficient copies of a manifest properly prepared, with each copy signed and dated by the licensee and each previous transporter in accordance with these regulations.

2. Before transporting the NORM, the transporter must sign and date each copy of the manifest acknowledging acceptance of the NORM from the licensee or previous transporter and return a signed copy to the licensee or previous transporter.

3. A transporter who delivers NORM to another transporter or to the designated storage, treatment, decontamination, or disposal facility shall:

a. obtain the date and signature of the accepting transporter or designated storage, treatment, decontamination, or disposal facility;

b. retain one copy of the manifest signed and dated by the licensee, all previous transporters, himself, and the next transporter or designated facility;

c. give the remaining copies of the manifest to the accepting transporter or designated facility.

G. Designated Facility. The designated facility should fill out his portion, retain a copy for his files, submit the original to the department, and send all remaining copies to the licensee no later than 15 days after delivery of the NORM waste.

AUTHORITY NOTE: Promulgated in accordance with R.S. 30:2001 et seq.

HISTORICAL NOTE: Promulgated by the Department of Environmental Quality, Office of Air Quality and Radiation Protection, Radiation Protection Division, LR 18:608 (June 1992), amended LR 21:28 (January 1995), amended by the Office of Environmental Assessment, Environmental Planning Division, LR 26:2600 (November 2000), amended by the Office of the Secretary, Legal Affairs Division, LR 31:2537 (October 2005).

§1419. Financial Responsibility of Transporters

A. Each transporter of NORM, NORM waste, or NORM contaminated equipment to a licensee for licensed long-term storage, treatment, decontamination, or disposal shall acquire continuous insurance coverage or other financial responsibility for all of its transport vehicles regulated by these regulations at a minimum coverage of $300,000 per vehicle public liability and $200,000 per vehicle damage.

B. The financial responsibility required by this Section may be established by any one or a combination of the following:

1. evidence of liability insurance;

2. self-insurance with a level not more than 20 percent of equity; or

3. other evidence of financial responsibility deemed acceptable by the secretary of the Department of Public Safety and Corrections or its successor agency.

AUTHORITY NOTE: Promulgated in accordance with R.S. 30:2001 et seq.

HISTORICAL NOTE: Promulgated by the Department of Environmental Quality, Office of Air Quality and Radiation Protection, Radiation Protection Division, LR 18:609 (June 1992), amended LR 21:29 (January 1995).

§1420. Financial Security Requirements for NORM Treaters or Storers

A. Each general licensee that stores NORM or NORM waste for greater than 90 days, and each specific licensee that leases or owns a physical location and that physically or chemically treats or stores NORM or NORM waste shall post with the department financial security to ensure the protection of the public health and safety and the environment in the event of abandonment, default, or other inability or unwillingness of the licensee to meet the requirements of the Act and these rules. Financial security shall:

1. name the department as beneficiary with a bond issued by a fidelity or surety company authorized to do business in Louisiana, a personal bond secured by such collateral as the department deems satisfactory, a cash bond, a liability endorsement, or a letter of credit. The amount of the bond, liability endorsement, or letter of credit shall be equal to or greater than the amount of the security required. Any security must be available in Louisiana and subject to judicial process and execution in the event required for the purposes set forth in this Section, and be continuous for the term of the license;

2. be in an amount based upon a department-approved cost estimates plan for decontamination, decommissioning, restoration, and reclamation of buildings, equipment, and the site to levels that would allow unrestricted use;

3. be established concurrent with the application or plan required by LAC 33:XV.1408.A.6.b to ensure that sufficient funds will be available to carry out the decontamination and decommissioning of the facility; and

4. be for the duration of the license and for a period coincident with the licensee's responsibility under the Act and these rules.

B. Pipe yards, storage yards, production equipment yards, or other facilities which receive, possess, and clean tubular goods which are contaminated with scale or residue shall meet the requirements of LAC 33:XV.1420.A.

C. On the effective date of these rules, current licenses in effect may continue, provided that the required security arrangements are submitted to the Office of Environmental Compliance, Emergency and Radiological Services Division, within 120 days.

D. No later than 90 days after the licensee notifies the department that decontamination and decommissioning have been completed, the department shall determine if these have been conducted in accordance with these rules. If the department finds that the requirements have been met, the secretary or his designee shall direct the return or release of the licensee's security in full plus any accumulated interest within 14 days. If the department finds that the requirements have not been met, the department will notify the licensee of the steps necessary for compliance.

E. This Section shall be applicable until such time that a NORM Trust Fund or other instrument to accomplish these purposes may be established by the legislature.

AUTHORITY NOTE: Promulgated in accordance with R.S. 30:2001 et seq.

HISTORICAL NOTE: Promulgated by the Department of Environmental Quality, Office of Air Quality and Radiation Protection, Radiation Protection Division, LR 18:609 (June 1992), amended LR 21:30 (January 1995), amended by the Office of Environmental Assessment, Environmental Planning Division, LR 26:2601 (November 2000), amended by the Office of the Secretary, Legal Affairs Division, LR 31:2537 (October 2005).

§1499. Appendices A, B, and C

Appendix A

Subjects to be Included in Training Courses for Individuals Performing NORM Surveys

The following outline describes the subjects that individuals must demonstrate competence in prior to being approved as a NORM surveyor.

I. Fundamentals of Radiation Safety

A. Characteristics of radiation

B. Units of radiation dose and quantity of radioactivity

C. Levels of radiation from sources of radiation

D. Methods of minimizing radiation dose:

1. working time;

2. working distance;

3. shielding;

4. respiratory precautions;

5. use of anti-contamination clothing.

II. Radiation Detection of Instrumentation to Be Used

A. Use of radiation survey instruments:

1. operation;

2. calibration;

3. limitations.

B. Survey techniques

C. Use of personnel-monitoring equipment

III. The Requirements of Pertinent State Regulations

Appendix B

Detailed development of the following must be included in the required worker protection plan:

I. The posting of signs pursuant to LAC 33:XV.451 and 1011 to inform personnel when they are entering a NORM contaminated area.

II. Procedures to prevent eating, drinking, smoking, and chewing in areas where work is being performed on contaminated equipment or where contaminated soil is being handled.

III. Procedures to avoid skin contact with NORM contaminated scale, solids, and sludges by the use of protective clothing such as gloves, coveralls, rubber boots, and eye protection.

IV. Procedures to ensure that personnel will thoroughly wash body parts that may have been potentially in direct contact with NORM-contaminated materials before eating, drinking, smoking, or leaving the work area.

V. Procedures for whole body monitoring of personnel in restricted area including a description of the survey instrumentation used.

VI. Procedures to minimize the number of personnel in the contaminated area.

VII. Other operational procedures (i.e., openings on contaminated equipment or containers should be sealed when stored or handled, tubulars capped on both ends, etc.).

For operations that have the potential to produce NORM contaminated dusts (i.e., cutting, grinding, sand-blasting, welding, drilling, polishing, or handling soil) or when loose contamination is suspected, the following additional precautions shall be taken:

I. The use of a respirator appropriate for radioactive particulates shall be worn if required by LAC 33:XV.Chapter 4.

II. Safety glasses should be worn for eye protection.

III. Activities shall be conducted in well-ventilated areas to which access has been restricted.

IV. Ground covers should be utilized to the extent possible to contain contaminants and facilitate cleanup.

V. The need for personnel monitoring and bioassay shall be evaluated and provided if necessary.

In addition to the general guidance given above, there may be industrial operations such as vessel entry, dismantling of equipment, refurbishing of equipment, or transportation, which may require additional precautionary procedures which should be included in the worker protection procedures submitted to the department.

Appendix C

Memorandum of Understanding between Louisiana Department of Natural Resources Office of Conversation and Louisiana Department of Environmental Quality

Regarding the
Regulation of Naturally Occurring Radioactive Material at Commercial Oilfield Waste Treatment Facilities

WHEREAS, the Louisiana Department of Natural Resources, Office of Conservation (DNR/OC), is authorized by state law and regulations to control the permitting, operation, and closure of commercial nonhazardous oilfield waste (NOW) disposal facilities in Louisiana, and,

WHEREAS, the Louisiana Department of Environmental Quality (DEQ) is authorized by state law and regulations to control the management and disposal of naturally occurring radioactive material (NORM), and,

WHEREAS, certain types of NOW have been recognized as occasionally containing levels of NORM that may warrant protection of public health and the environment, and,

WHEREAS, it is in the public interest for both agencies to coordinate their resources in order to provide adequate protection of public health and the environment and to avoid duplicative regulatory efforts and unnecessary expenses to DNR/OC and DEQ, the regulated community and the citizens of this state.

******

THEREFORE, the following MEMORANDUM OF UNDERSTANDING is hereby adopted to outline the specific responsibilities of each agency regarding the regulation of NORM treatment at commercial NOW facilities which are permitted and regulated under the jurisdiction of the Office of Conservation:

1. Commercial NOW facilities will be permitted to receive, and treat NORM in accordance with specific licenses issued by DEQ under LAC 33:XV.301 and 1401 et seq. Existing DNR/OC permits will be required to be amended according to the requirements of LAC 43:XIX.129.M. DNR/OC and DEQ will, to the extent possible, coordinate and/or combine efforts in the holding of any public hearings with regard to permitting commercial NOW/NORM facilities.

2. Commercial NOW/NORM facilities (DEQ specific licensees) may be authorized to receive and treat NORM contaminated with concentrations of up to 200 picocuries per gram radium-226 or radium-228 and daughter products, provided all operational procedures are adhered to and a satisfactory history of compliance is established.

3. In addition to standards for documentation of compliance with the reuse criteria of LAC 43:XIX.129.M, treated NOW/NORM which is offered for reuse must also meet the requirements of DEQ.

4. Only written requests will be considered by DNR/OC and DEQ for reuse of treated NOW/NORM. Documentation of compliance with regulatory requirements must be provided with each request. Specific written approval from each agency must be obtained prior to removal of material from a treatment system.

5. Commercial NOW/NORM treatment facilities will not be permitted to mix and treat non-NORM (NOW) waste with NORM waste.

6. DEQ will be required to notify DNR/OC, within 24 hours, of planned/scheduled inspections of a commercial NOW/NORM treatment facilities.

7. When violations are documented, enforcement actions will be coordinated between DNR/OC and DEQ to determine the proper agency for issuance of notices of violation, compliance orders, assessment of penalties or any other enforcement activity.

8. As deemed necessary, DNR/OC and DEQ will share monitoring information required to be submitted by permitted NOW/NORM treatment facilities.

This MEMORANDUM OF UNDERSTANDING is subject to revision or cancellation upon agreement of both parties.

AUTHORITY NOTE: Promulgated in accordance with R.S. 30:2001 et seq.

HISTORICAL NOTE: Promulgated by the Department of Environmental Quality, Office of Air Quality and Radiation Protection, Radiation Protection Division, LR 18:609 (June 1992),

amended LR 21:30 (January 1995), amended by the Office of Environmental Assessment, Environmental Planning Division, LR 26:2601 (November 2000).

Chapter 15. Transportation of Radioactive Material

§1501. Purpose

A. The regulations in this Chapter establish requirements for packaging, preparation for shipment, and transportation of radioactive material in excess of Type A quantities.

AUTHORITY NOTE: Promulgated in accordance with R.S. 30:2001 et seq.

HISTORICAL NOTE: Promulgated by the Department of Environmental Quality, Nuclear Energy Division, LR 13:569 (October 1987).

§1502. Scope

A. Each licensee who transports licensed material outside the site of usage, as specified in the department license, or where transport is on public highways, or who delivers licensed material to a carrier for transport, shall comply with the regulations in this Chapter and the applicable requirements of the U.S. DOT regulations appropriate to the mode of transport of U.S. DOT in 49 CFR Parts 170-189.

B. The licensee shall particularly note U.S. DOT regulations in the following areas:

1. packaging—49 CFR Part 173, Subparts A, B, and I;

2. marking and labeling—49 CFR Part 172, Subpart D, Paragraphs 172.400-172.407, 172.436-172.440, and Subpart E;

3. placarding—49 CFR Part 172, Subpart F, Paragraphs 172.500-172.519, 172.556; and Appendices B and C;

4. shipping papers and emergency information—49 CFR Part 172, Subparts C and G;

5. accident reporting—49 CFR Parts 171.15 and 171.16;

6. hazardous material shipper/carrier requirements—49 CFR Part 107, Subpart G; and

7. hazardous material employee training—49 CFR Part 172, Subpart H.

C. The licensee shall also note U.S. DOT regulations pertaining to the following modes of transportation:

1. rail—49 CFR Part 174, Subparts A-D and K;

2. air—49 CFR Part 175;

3. vessel—49 CFR Part 176, Subparts A-F and M; and

4. public highway—49 CFR Part 177 and Parts 390-397.

D. If U.S. DOT regulations are not applicable to a shipment of licensed material, the licensee shall conform to the standards and requirements of the U.S. DOT specified in Subsection A of this Section to the same extent as if the shipment or transportation were subject to U.S. DOT regulations. A request for modification, waiver, or exemption from those requirements, and any notification referred to in those requirements, must be filed with, or made to, the U.S. DOT.

AUTHORITY NOTE: Promulgated in accordance with R.S. 30:2001 et seq.

HISTORICAL NOTE: Promulgated by the Department of Environmental Quality, Nuclear Energy Division, LR 13:569 (October 1987), amended by the Office of Environmental Assessment, Environmental Planning Division, LR 26:1265 (June 2000), LR 26:2771 (December 2000), LR 27:1238 (August 2001).

§1503. Definitions

A. As used in this Chapter, the following definitions apply.

A_1—the maximum activity of special form radioactive material permitted in a Type A package.

A_2—the maximum activity of radioactive material, other than special form, LSA, and SCO material, permitted in a Type A package. These values are either listed in, or may be derived in accordance with the procedure prescribed in, Appendix A of 10 CFR Part 71.

Carrier—a person engaged in the transportation of passengers or property by land or water as a common, contract, or private carrier, or by civil aircraft.

Conveyance—for transport by public highway or rail, any transport vehicle or large freight container; for transport by water, any vessel, or any hold, compartment, or defined deck area of a vessel, including any transport vehicle on board the vessel; and for transport by aircraft, any aircraft.

Exclusive Use—the sole use by a single consignor of a conveyance and for which all initial, intermediate, and final loading and unloading are carried out in accordance with the direction of the consignor or consignee. The consignor and the carrier must ensure that any loading or unloading is performed by personnel having radiological training and resources appropriate for safe handling of the consignment. The consignor must issue specific instructions, in writing, for maintenance of exclusive use shipment controls, and include them with the shipping paper information provided to the carrier by the consignor.

Fissile Material—plutonium-238, plutonium-239, plutonium-241, uranium-233, uranium-235, or any combination of these radionuclides. Unirradiated natural uranium and depleted uranium, and natural uranium or depleted uranium that has been irradiated in thermal reactors only are not included in this definition. Certain exclusions from fissile material controls are provided by the U.S. NRC in 10 CFR 71.53.

Low Specific Activity (LSA) Material—radioactive material with limited specific activity that satisfies the descriptions and limits set forth below. Shielding materials surrounding the LSA material may not be considered in determining the estimated average specific activity of the

package contents. LSA material must be in one of three groups:

a. LSA-I:

i. ores containing only naturally occurring radionuclides (e.g., uranium, thorium) and uranium or thorium concentrates of such ores;

ii. solid unirradiated natural uranium, depleted uranium, or natural thorium or their solid or liquid compounds or mixtures;

iii. radioactive material, other than fissile material, for which the A_2 value is unlimited; or

iv. mill tailings, contaminated earth, concrete, rubble, other debris, and activated material in which the radioactive material is essentially uniformly distributed, and the average specific activity does not exceed 10^{-6} A_2/g;

b. LSA-II:

i. water with tritium concentration up to 0.8 TBq/liter (20.0 Ci/liter); or

ii. material in which the radioactive material is distributed throughout, and the average specific activity does not exceed 10^{-4} A_2/g for solids and gases, and 10^{-5} A_2/g for liquids;

c. LSA-III. Solids (e.g., consolidated wastes, activated materials) in which:

i. the radioactive material is distributed throughout a solid or a collection of solid objects or is essentially uniformly distributed in a solid compact binding agent (e. g., concrete, bitumen, ceramic, etc.);

ii. the radioactive material is essentially uniformly distributed throughout a solid or a collection of solid objects or is essentially uniformly distributed in a solid compact binding agent (e.g., concrete, bitumen, ceramic, etc.);

iii. the radioactive material is relatively insoluble, or it is intrinsically contained in a relatively insoluble material, so that, even under loss of packaging, the loss of radioactive material per package by leaching, when placed in water for seven days, would not exceed 0.1 A_2; and

iv. the average specific activity of the solid does not exceed 2 x 10^{-3} A_2/g.

Low Toxicity Alpha Emitters—natural uranium, depleted uranium, and natural thorium; uranium-235, uranium-238, thorium-232, thorium-228, or thorium-230 when contained in ores or physical or chemical concentrates or tailings; or alpha emitters with a half-life of less than 10 days.

Maximum Normal Operating Pressure—the maximum gauge pressure that would develop in the containment system in a period of one year under the heat condition specified by the U.S. NRC regulations in 10 CFR 71.71(c)(1), in the absence of venting, external cooling by an ancillary system, or operational controls during transport.

Natural Thorium—thorium with the naturally occurring distribution of thorium isotopes (essentially 100 weight percent thorium-232).

Normal Form Radioactive Material—radioactive material which has not been demonstrated to qualify as *special form radioactive material*.

Package—the packaging together with its radioactive contents as presented for transport.

a. Fissile material package means a fissile material packaging together with its fissile material contents.

b. Type B package means a Type B packaging together with its radioactive contents. On approval, a Type B package design is designated by the NRC as B(U) unless the package has a maximum normal operating pressure of more than 700 kPa (100 lb/in^2) gauge or a pressure relief device that would allow the release of radioactive material to the environment under the tests specified in U.S. NRC regulations 10 CFR 71.73, in which case it will receive a designation B(M). B(U) refers to the need for unilateral approval of international shipments; B(M) refers to the need for multilateral approval of international shipments. There is no distinction made in how packages with these designations may be used in domestic transportation. To determine their distinction for international transportation, see U.S. DOT regulations in 49 CFR Part 173. A Type B package approved before September 6, 1983, was designated only as Type B. Limitations on its use are specified in LAC 33:XV.1509.

Packaging—the assembly of components necessary to ensure compliance with the packaging requirements of this Chapter. It may consist of one or more receptacles, absorbent materials, spacing structures, thermal insulation, radiation shielding, and devices for cooling or absorbing mechanical shocks. The vehicle, tie-down system, and auxiliary equipment may be designated as part of the packaging.

Regulations of the U.S. Department of Transportation—the regulations in 49 CFR Parts 100-189.

Special Form Radioactive Material—radioactive material that satisfies the following conditions:

a. it is either a single solid piece or is contained in a sealed capsule that can be opened only by destroying the capsule;

b. the piece or capsule has at least one dimension not less than 5 millimeters (0.197 inch); and

c. it satisfies the test requirements specified by the U.S. NRC in 10 CFR 71.75. A special form encapsulation designed in accordance with the NRC requirements in 10 CFR 71.4 in effect on June 30, 1983, and constructed prior to July 1, 1985, may continue to be used. A special form encapsulation either designed or constructed after June 30, 1985, must meet requirements of this definition applicable at the time of its design or construction. Any other special form encapsulation must meet the specifications of this definition.

Specific Activity of a Radionuclide—the radioactivity of the radionuclide per unit mass of that nuclide. The specific

activity of a material in which the radionuclide is essentially uniformly distributed is the radioactivity per unit mass of the material.

Surface Contaminated Object (SCO)—a solid object that is not itself classed as radioactive material, but which has radioactive material distributed on any of its surfaces. SCOs must be in one of two groups with surface activity not exceeding the following limits:

a. SCO-I. A solid object on which:

i. the non-fixed contamination on the accessible surface averaged over 300 cm^2 (or the area of the surface if less than 300 cm^2) does not exceed 4 Bq/cm^2 (10^{-4} microcurie/cm^2) for beta and gamma and low toxicity alpha emitters, or 0.4 Bq/cm^2 (10^{-5} microcurie/cm^2) for all other alpha emitters;

ii. the fixed contamination on the accessible surface averaged over 300 cm^2 (or the area of the surface if less than 300 cm^2) does not exceed $4x10^4$ Bq/cm^2 (1.0 microcurie/cm^2) for beta and gamma and low toxicity alpha emitters, or $4x10^3$ Bq/cm^2 (0.1 microcurie/cm^2) for all other alpha emitters; and

iii. the non-fixed contamination plus the fixed contamination on the inaccessible surface averaged over 300 cm^2 (or the area of the surface if less than 300 cm^2) does not exceed $4x10^4$ Bq/cm^2 (1 microcurie/cm^2) for beta and gamma and low toxicity alpha emitters, or $4x10^3$ Bq/cm^2 (0.1 microcurie/cm^2) for all other alpha emitters.

b. SCO-II. A solid object on which the limits for SCO-I are exceeded and on which:

i. the non-fixed contamination on the accessible surface averaged over 300 cm^2 (or the area of the surface if less than 300 cm^2) does not exceed 400 Bq/cm^2 (10^{-2} microcurie/cm^2) for beta and gamma and low toxicity alpha emitters or 40 Bq/cm^2 (10^{-3} microcurie/cm^2) for all other alpha emitters;

ii. the fixed contamination on the accessible surface averaged over 300 cm^2 (or the area of the surface if less than 300 cm^2) does not exceed 8×10^5 Bq/cm^2 (20 microcuries/cm^2) for beta and gamma and low toxicity alpha emitters or 8×10^4 Bq/cm^2 (2 microcuries/cm^2) for all other alpha emitters; and

iii. the non-fixed contamination plus the fixed contamination on the inaccessible surface averaged over 300 cm^2 (or the area of the surface if less than 300 cm^2) does not exceed 8×10^5 Bq/cm^2 (20 microcuries/cm^2) for beta and gamma and low toxicity alpha emitters, or 8×10^4 Bq/cm^2 (2 microcuries/cm^2) for all other alpha emitters.

Transport Index—the dimensionless number (rounded up to the first decimal place) placed on the label of a package to designate the degree of control to be exercised by the carrier during transportation. The transport index is determined as follows:

a. for non-fissile material packages, the number determined by multiplying the maximum radiation level in millisievert (mSv) per hour at 1 meter (3.3 ft) from the external surface of the package by 100 (equivalent to the maximum radiation level in millirem per hour at 1 meter [3.3 ft]); or

b. for fissile material packages, the number determined by multiplying the maximum radiation level in mSv per hour at one meter (3.3 ft) from the external surface of the package by 100 (equivalent to the maximum radiation level in millirem per hour at one meter [3.3 ft]), or for critical control purposes, the number obtained as described in the U.S. NRC regulations, whichever is larger.

Type A Quantity—a quantity of radioactive material, the aggregate radioactivity of which does not exceed A_1 for special form radioactive material or A_2 for normal form radioactive material, where A_1 and A_2 are given in LAC 33:XV.1517 or may be determined by procedures described in LAC 33:XV.1517.

Type B Quantity—a quantity of radioactive material greater than a Type A quantity.

AUTHORITY NOTE: Promulgated in accordance with R.S. 30:2001 et seq.

HISTORICAL NOTE: Promulgated by the Department of Environmental Quality, Nuclear Energy Division, LR 13:569 (October 1987), amended by the Office of Environmental Assessment, Environmental Planning Division, LR 26:1265 (June 2000), amended by the Office of Environmental Assessment, LR 31:55 (January 2005).

§1504. Requirement for License

A. No person shall transport radioactive material or deliver radioactive material to a carrier for transport except as authorized in a general or specific license issued by the department or as exempted in LAC 33:XV.1505.

AUTHORITY NOTE: Promulgated in accordance with R.S. 30:2001 et seq.

HISTORICAL NOTE: Promulgated by the Department of Environmental Quality, Nuclear Energy Division, LR 13:569 (October 1987), amended by the Office of Environmental Assessment, Environmental Planning Division, LR 26:2602 (November 2000).

§1505. Exemptions

A. Common and contract carriers, freight forwarders, and warehousemen who are subject to the requirements of the U.S. Department of Transportation in 49 CFR 170 through 189 or the U.S. Postal Service in the Postal Service Manual (Domestic Mail Manual), Section 124.3 incorporated by reference, 39 CFR 111.11 [1974], are exempt from these regulations to the extent that they transport or store radioactive material in the regular course of their carriage for another or storage incident thereto. Common and contract carriers who are not subject to the requirements of the U.S. Department of Transportation or U.S. Postal Service are subject to LAC 33:XV.1504 and other applicable sections of these regulations.

B. Any licensee is exempt from the requirements of this Chapter to the extent that he delivers to a carrier for transport a package containing radioactive material having a

specific activity not greater than 0.002 microcurie [74 Bq] per gram.

C. A licensee is exempt from all requirements of this Chapter, other than LAC 33:XV.1506 and 1513, with respect to shipment or carriage of the following:

1. packages containing no more than Type A quantities of radioactive material; or

2. packages transported between locations within the United States which contain only americium or plutonium in special form with an aggregate radioactivity not to exceed 20 curies.

D. Any physician licensed by the state of Louisiana to dispense drugs in the practice of medicine is exempt from LAC 33:XV.1502 with respect to transport by the physician of licensed material for use in the practice of medicine. However, any physician operating under this exemption must be licensed under LAC 33:XV.Chapter 7.

AUTHORITY NOTE: Promulgated in accordance with R.S. 30:2001 et seq.
HISTORICAL NOTE: Promulgated by the Department of Environmental Quality, Nuclear Energy Division, LR 13:569 (October 1987), amended by the Office of Environmental Assessment, LR 31:55 (January 2005).

§1506. Transportation of Licensed Material

A. Each licensee who transports licensed material outside of the confines of his plant or other place of use, or who delivers licensed material to a carrier for transport shall:

1. comply with the applicable requirements, appropriate to the mode of transport, of DOT in 49 CFR Parts 170 through 189;

2. assure that any special instructions needed to safely open the package are sent to or have been made available to the consignee.

B. If, for any reason, the regulations of the U.S. Department of Transportation are not applicable to a shipment of licensed material, the licensee shall conform to the standards and requirements of those regulations to the same extent as if the shipment was subject to the regulations.

AUTHORITY NOTE: Promulgated in accordance with R.S. 30:2001 et seq.
HISTORICAL NOTE: Promulgated by the Department of Environmental Quality, Nuclear Energy Division, LR 13:569 (October 1987).

§1507. General Licenses for Carriers

A. A general license is hereby issued to any common or contract carrier not exempt under LAC 33:XV.1505 to receive, possess, transport, and store radioactive material in the regular course of their carriage for another or storage incident thereto, provided the transportation and storage is in accordance with the applicable requirements, appropriate to the mode of transport, of the U.S. Department of Transportation insofar as such requirements relate to the loading and storage of packages, placarding of the transporting vehicle, and incident reporting. Any notification of incidents referred to in those U.S. Department of Transportation requirements shall be filed with, or made to, the Office of Environmental Compliance, by telephone at (225) 765-0160.

B. A general license is hereby issued to any private carrier to transport radioactive material, provided the transportation is in accordance with the applicable requirements, appropriate to the mode of transport, of the U.S. Department of Transportation insofar as such requirements relate to the loading and storage of packages, placarding of the transporting vehicle, and incident reporting. Any notification of incidents referred to in those U.S. Department of Transportation requirements shall be filed with, or made to, the Office of Environmental Compliance, by telephone at (225) 765-0160.

C. Persons who transport radioactive material pursuant to the general licenses in LAC 33:XV.1507 A. or B are exempt from the requirements of Chapters 4 and 10 of these regulations to the extent that they transport radioactive material.

AUTHORITY NOTE: Promulgated in accordance with R.S. 30:2001 et seq.
HISTORICAL NOTE: Promulgated by the Department of Environmental Quality, Nuclear Energy Division, LR 13:569 (October 1987), amended by the Office of Environmental Assessment, Environmental Planning Division, LR 26:2602 (November 2000).

§1508. General License: NRC Approved Packages

A. A general license is hereby issued to any licensee of the department to transport, or to deliver to a carrier for transport, licensed material in a package for which a license, certificate of compliance, or other approval has been issued by the department.

B. This general license applies only to a licensee who:

1. has a quality assurance program approved by the department as satisfying the provisions of the U.S. NRC, 10 CFR 71, Subpart H;

2. has a copy of the specific license, certificate of compliance, or other approval of the package and has the drawings and other documents referenced in the approval relating to the use and maintenance of the packaging and to the actions to be taken prior to shipment;

3. complies with the terms and conditions of the license, certificate, or other approval, as applicable, and the applicable requirements of this Chapter; and

4. prior to the licensee's first use of the package, has registered with the U.S. NRC.

C. The general license in this Section applies only when the package approval authorizes use of the package under this general license.

D. For a Type B or fissile material package, the design of which was approved by the U.S. NRC before April 1, 1996, the general license is subject to additional restrictions of LAC 33:XV.1509.

AUTHORITY NOTE: Promulgated in accordance with R.S. 30:2001 et seq.

HISTORICAL NOTE: Promulgated by the Department of Environmental Quality, Nuclear Energy Division, LR 13:569 (October 1987), amended by the Office of Environmental Assessment, Environmental Planning Division, LR 26:1267 (June 2000).

§1509. Previously Approved Type B Packages

A. A Type B package previously approved by the U.S. NRC, but not designated as B(U) or B(M) in the identification number of the NRC Certificate of Compliance, may be used under the general license of LAC 33:XV.1508 with the following additional limitations:

1. fabrication of the packaging was satisfactorily completed by August 31, 1986, as demonstrated by application of its model number in accordance with U.S. NRC regulations;

2. the package may not be used for a shipment to a location outside the United States, except under special arrangement approved by the U.S. DOT in accordance with 49 CFR 173.403; and

3. a serial number that uniquely identifies each packaging that conforms to the approved design is assigned to, and legibly and durably marked on, the outside of each packaging.

B. A Type B(U) package, a Type B(M) package, a LSA material package, or a fissile material package previously approved by the U.S. NRC, but without the designation *-85* in the identification number of the U.S. NRC Certificate of Compliance, may be used under the general license of LAC 33:XV.1508 with the following additional conditions:

1. fabrication of the package was satisfactorily completed by April 1, 1999, as demonstrated by application of its model number in accordance with U.S. NRC regulations;

2. a package used for a shipment to a location outside the United States is subject to multilateral approval as defined in U.S. DOT regulations at 49 CFR 173.403; and

3. a serial number that uniquely identifies each packaging that conforms to the approved design is assigned to, and legibly and durably marked on, the outside of each packaging.

AUTHORITY NOTE: Promulgated in accordance with R.S. 30:2001 et seq.

HISTORICAL NOTE: Promulgated by the Department of Environmental Quality, Nuclear Energy Division, LR 13:569 (October 1987), amended by the Office of Environmental Assessment, Environmental Planning Division, LR 26:1267 (June 2000).

§1510. General License: DOT Specification Container

A. A general license is issued to any licensee of the department to transport, or to deliver to a carrier for transport, licensed material in a specification container for fissile material or for a Type B quantity of radioactive material as specified in the regulations of the U.S. DOT at 49 CFR Parts 173 and 178.

B. This general license applies only to a licensee who has a quality assurance program approved by the U.S. NRC as satisfying the provisions of 10 CFR Part 71, Subchapter H.

C. This general license applies only to a licensee who:

1. has a copy of the specification; and

2. complies with the terms and conditions of the specification and the applicable requirements of this Chapter.

D. The general license in Subsection A of this Section is subject to the limitation that the specification container may not be used for a shipment to a location outside the United States, except by multilateral approval, as defined in U.S. DOT regulations at 49 CFR 173.403.

AUTHORITY NOTE: Promulgated in accordance with R.S. 30:2001 et seq.

HISTORICAL NOTE: Promulgated by the Department of Environmental Quality, Nuclear Energy Division, LR 13:569 (October 1987), amended by the Office of Environmental Assessment, Environmental Planning Division, LR 26:1268 (June 2000).

§1511. General License: Use of Foreign Approved Package

A. A general license is issued to any licensee of the department to transport, or to deliver to a carrier for transport, licensed material in a package the design of which has been approved in a foreign national competent authority certificate that has been revalidated by the U.S. DOT as meeting the applicable requirements of 49 CFR 171.12.

B. Except as otherwise provided in this Section, the general license applies only to a licensee who has a quality assurance program approved by the U. S. NRC as satisfying the applicable provisions of 10 CFR Part 71, Subpart H.

C. This general license applies only to shipments made to or from locations outside the United States.

D. This general license applies only to a licensee who:

1. has a copy of the applicable certificate, the revalidation, and the drawings and other documents referenced in the certificate relating to the use and maintenance of the packaging and to the actions to be taken prior to shipment; and

2. complies with the terms and conditions of the certificate and revalidation and with the applicable requirements of this Chapter. With respect to the quality assurance provisions of 10 CFR Part 71, Subpart H, the licensee is exempt from design, construction, and fabrication considerations.

AUTHORITY NOTE: Promulgated in accordance with R.S. 30:2001 et seq.

HISTORICAL NOTE: Promulgated by the Department of Environmental Quality, Nuclear Energy Division, LR 13:569 (October 1987), amended by the Office of Environmental

Assessment, Environmental Planning Division, LR 26:1268 (June 2000).

§1512. Routine Determinations

A. Before the first use of any packaging for the shipment of licensed material, the licensee shall:

1. ascertain that there are no cracks, pinholes, uncontrolled voids, or other defects that could significantly reduce the effectiveness of the packaging;

2. where the maximum normal operating pressure will exceed 35 kPa (5 lbs/in^2) gauge, test the containment system at an internal pressure at least 50 percent higher than the maximum normal operating pressure, to verify the capability of that system to maintain its structural integrity at that pressure; and

3. conspicuously and durably mark the packaging with its model number, serial number, gross weight, and a package identification number assigned by the U.S. NRC. Before applying the model number, the licensee shall determine that the packaging has been fabricated in accordance with the design approved by the U.S. NRC.

B. Prior to each shipment of licensed material, the licensee shall ensure that the package with its contents satisfies the applicable requirements of this Chapter and of the license. The licensee shall determine that:

1. the package is proper for the contents to be shipped;

2. the package is in unimpaired physical condition except for superficial defects such as marks or dents;

3. each closure device of the packaging, including any required gasket, is properly installed and secured and free of defects;

4. any system for containing liquid is adequately sealed and has adequate space or other specified provision for expansion of the liquid;

5. any pressure relief device is operable and set in accordance with written procedures;

6. the package has been loaded and closed in accordance with written procedures;

7. for fissile material, any moderator or neutron absorber, if required, is present and in proper condition;

8. any structural part of the package that could be used to lift or tie down the package during transport is rendered inoperable for that purpose unless it satisfies design requirements specified by the U.S. NRC in 10 CFR 71.45;

9. the level of non-fixed (removable) radioactive contamination on the external surfaces of each package offered for shipment is as low as reasonably achievable and within the limits specified in U.S. DOT regulations at 49 CFR 173.443;

10. external radiation levels around the package and around the vehicle, if applicable, will not exceed the limits specified by the U.S. NRC in 10 CFR 71.47 at any time during transportation; and

11. accessible package surface temperatures shall not exceed the limits specified by the U.S. NRC in 10 CFR 71.43 at any time during transportation.

AUTHORITY NOTE: Promulgated in accordance with R.S. 30:2001 et seq.

HISTORICAL NOTE: Promulgated by the Department of Environmental Quality, Nuclear Energy Division, LR 13:569 (October 1987), amended by the Office of Environmental Assessment, Environmental Planning Division, LR 26:1268 (June 2000).

§1513. Air Transport of Plutonium

A. Notwithstanding the provisions of any general licenses and notwithstanding any exemptions stated directly in this Chapter or included indirectly by citation of U.S. DOT regulations, as may be applicable, the licensee shall assure that plutonium in any form, whether for import, export, or domestic shipment, is not transported by air or delivered to a carrier for air transport unless:

1. the plutonium is contained in a medical device designed for individual human application;

2. the plutonium is contained in a material in which the specific activity is not greater than 0.002 microcuries/gram (74 Bq/g) of material and in which the radioactivity is essentially uniformly distributed;

3. the plutonium is shipped in a single package containing not more than an A_2 quantity of plutonium in any isotope or form and is shipped in accordance with LAC 33:XV.1502; or

4. the plutonium is shipped in a package specifically authorized for the shipment of plutonium by air in the Certificate of Compliance for that package issued by the U.S NRC.

B. Nothing in Subsection A of this Section is to be interpreted as removing or diminishing the requirements of U.S. NRC regulations in 10 CFR 73.24.

C. For a shipment of plutonium by air that is subject to Paragraph A.4 of this Section, the licensee shall, through special arrangement with the carrier, require compliance with U.S. DOT regulations (49 CFR 175.704) applicable to the air transport of plutonium.

AUTHORITY NOTE: Promulgated in accordance with R.S. 30:2001 et seq.

HISTORICAL NOTE: Promulgated by the Department of Environmental Quality, Nuclear Energy Division, LR 13:569 (October 1987), amended by the Office of Environmental Assessment, Environmental Planning Division, LR 26:1268 (June 2000).

§1514. Records

A. Each licensee shall maintain, for a period of three years after shipment, a record of each shipment of licensed material not exempt under LAC 33:XV.1505, showing, where applicable:

1. identification of the packaging by model number and serial number;

2. verification that there are no significant defects in the packaging, as shipped;

3. volume and identification of coolant;

4. type and quantity of licensed material in each package, and the total quantity of each shipment;

5. date of the shipment;

6. name and address of the transferee;

7. address to which the shipment was made;

8. results of the determinations required by LAC 33:XV.1512 and by the conditions of the package approval; and

9. in addition, for each item of irradiated fissile material:

a. identification by model number and serial number;

b. irradiation and decay history to the extent appropriate to demonstrate that its nuclear and thermal characteristics comply with license conditions; and

c. any abnormal or unusual condition relevant to radiation safety.

B. The licensee shall make available to the department for inspection, upon reasonable notice, all records required by this Chapter. Records are only valid if stamped, initialed, or signed and dated by authorized personnel or otherwise authenticated.

C. The licensee shall maintain sufficient written records to furnish evidence of the quality of packaging. The records to be maintained include results of the determinations required by LAC 33:XV.1512, design, fabrication, and assembly records; results of reviews, inspections, tests, and audits; results of monitoring work performance and materials analyses; and results of maintenance, modification, and repair activities. Inspection, test, and audit records must identify the inspector or data recorder, the type of observation, the results, the acceptability, and the action taken in connection with any deficiencies noted. The records must be retained for three years after the life of the packaging to which they apply.

AUTHORITY NOTE: Promulgated in accordance with R.S. 30:2001 et seq.

HISTORICAL NOTE: Promulgated by the Department of Environmental Quality, Nuclear Energy Division, LR 13:569 (October 1987), amended by the Office of Environmental Assessment, Environmental Planning Division, LR 26:1269 (June 2000).

§1515. Reports

A. The licensee shall report to the Office of Environmental Compliance, Emergency and Radiological Services Division, within 30 days:

1. any instance in which there is significant reduction in the effectiveness of any approved Type B or fissile packaging during use;

2. details of any defects with safety significance in Type B or fissile packaging after first use, with the means employed to repair the defects and prevent their recurrence; and

3. instances in which the conditions of approval in the Certificate of Compliance were not observed in making a shipment.

AUTHORITY NOTE: Promulgated in accordance with R.S. 30:2001 et seq.

HISTORICAL NOTE: Promulgated by the Department of Environmental Quality, Nuclear Energy Division, LR 13:569 (October 1987), amended by the Office of Environmental Assessment, Environmental Planning Division, LR 26:1269 (June 2000), LR 26:2602 (November 2000), amended by the Office of the Secretary, Legal Affairs Division, LR 31:2537 (October 2005).

§1516. Advance Notification of Transport of Nuclear Waste

A. Prior to the transport of any nuclear waste outside of the confines of the licensee's facility or other place of use or storage, or prior to the delivery of any nuclear waste to a carrier for transport, each licensee shall provide advance notification of such transport to the governor, or governor's designee, of each state through which the waste will be transported. A list of the mailing addresses of the governors and governors' designees is available upon request from the director, Office of State Programs, U.S. Nuclear Regulatory Commission, Washington, D.C. 20555. In Louisiana, the governor's designee is the Secretary of the Department of Environmental Quality.

B. Advance notification is required only when:

1. the nuclear waste is required to be in Type B packaging for transportation;

2. the nuclear waste is being transported to, through, or across state boundaries to a disposal site or to a collection point for transport to a disposal site;

3. the quantity of licensed material in a single package exceeds the least of the following:

a. 3000 times the A_1 value of the radionuclides, as specified in LAC 33:XV.1517, for special form radioactive material;

b. 3000 times the A_2 value of the radionuclides, as specified in LAC 33:XV.1517, for normal form radioactive material; or

c. 1000 TBq (27,000 Ci).

C. Each advance notification required by LAC 33:XV.1516.A shall contain the following information:

1. the name, address, and telephone number of the shipper, carrier, and receiver of the shipment;

2. a description of the nuclear waste contained in the shipment as required by the regulations of the U.S. Department of Transportation, 49 CFR 172.202 and 172.203[d];

3. the point of origin of the shipment and the 7-day period during which departure of the shipment is estimated to occur;

4. the 7-day period during which arrival of the shipment at state boundaries is estimated to occur;

5. the destination of the shipment, and the 7-day period during which arrival of the shipment is estimated to occur; and

6. a point of contact with a telephone number for current shipment information.

D. The notification required by LAC 33:XV.1516.A shall be made in writing to the office of each appropriate governor or governor's designee and to the Office of Environmental Compliance, Emergency and Radiological Services Division. A notification delivered by mail must be postmarked at least seven days before the beginning of the seven-day period during which departure of the shipment is estimated to occur. A notification delivered by messenger must reach the office of the governor, or governor's designee, at least four days before the beginning of the seven-day period during which departure of the shipment is estimated to occur. A copy of the notification shall be retained by the licensee for three years.

E. The licensee shall notify each appropriate governor, or governor's designee, and the Office of Environmental Compliance, Emergency and Radiological Services Division, of any changes to schedule information provided in accordance with Subsection A of this Section. Such notification shall be by telephone to a responsible individual in the office of the governor, or governor's designee, of the appropriate state or states. The licensee shall maintain for three years a record of the name of the individual contacted.

F. Each licensee who cancels a nuclear waste shipment, for which advance notification has been sent, shall send a cancellation notice to the governor, or governor's designee, of each appropriate state and to the Office of Environmental Compliance, Emergency and Radiological Services Division. A copy of the notice shall be retained by the licensee for three years.

AUTHORITY NOTE: Promulgated in accordance with R.S. 30:2001 et seq.

HISTORICAL NOTE: Promulgated by the Department of Environmental Quality, Nuclear Energy Division, LR 13:569 (October 1987), amended by the Office of Environmental Assessment, Environmental Planning Division, LR 26:1269 (June 2000), LR 26:2602 (November 2000), amended by the Office of Environmental Assessment, LR 30:2029 (September 2004), amended by the Office of the Secretary, Legal Affairs Division, LR 31:2537 (October 2005).

§1517. Incorporation by Reference

A. 10 CFR Part 71, Appendix A, January 1, 2005, is hereby incorporated by reference.

AUTHORITY NOTE: Promulgated in accordance with R.S. 30:2104 and 2113.

HISTORICAL NOTE: Promulgated by the Department of Environmental Quality, Office of Environmental Assessment, Environmental Planning Division, LR 26:1270 (June 2000), amended LR 27:2233 (December 2001), LR 28:997 (May 2002), LR 29:701 (May 2003), LR 30:752 (April 2004), amended by the Office of Environmental Assessment, LR 31:920 (April 2005), amended by the Office of the Secretary, Legal Affairs Division, LR 32:604 (April 2006).

Chapter 17. Licensing and Radiation Safety Requirements for Irradiators

§1701. Purpose and Scope

A. This Chapter contains requirements for the issuance of a license authorizing the use of sealed sources containing radioactive material in irradiators used to irradiate objects or materials using gamma radiation. This Chapter also contains radiation safety requirements for operating irradiators. The requirements of this Chapter are in addition to other requirements of these regulations. In particular, the provisions of LAC 33:XV.Chapters 1, 3, 4, and 10 apply to applications and licenses subject to this Chapter. Nothing in this Chapter relieves the licensee from complying with other applicable federal, state, and local regulations governing the siting, zoning, land use, and building code requirements for industrial facilities.

B. The regulations in this Chapter apply to panoramic irradiators that have either dry or wet storage of the radioactive sealed sources and to underwater irradiators in which both the source and the product being irradiated are under water. Irradiators whose dose rates exceed 5 grays (500 rads) per hour at one meter from the radioactive sealed sources in air or in water, as applicable for the irradiator type, are covered by this Chapter.

C. The regulations in this Chapter do not apply to self-contained dry-source-storage irradiators in which both the source and the area subject to irradiation are contained within a device and are not accessible by personnel, medical radiology or teletherapy, radiography for the irradiation of materials for nondestructive testing purposes, gauging, or open-field, agricultural, irradiations.

AUTHORITY NOTE: Promulgated in accordance with R.S. 30:2001 et seq.

HISTORICAL NOTE: Promulgated by the Department of Environmental Quality, Office of Air Quality and Radiation Protection, Radiation Protection Division, LR 24:2112 (November 1998).

§1703. Definitions

A. As used in this Chapter, the following definitions apply. Other definitions applicable to this Chapter may be found in LAC 33:XV.Chapters 1 and 2.

Annually—at intervals not to exceed one year.

Doubly Encapsulated Sealed Source—a sealed source in which the radioactive material is sealed within an inner capsule and that capsule is sealed within an outer capsule.

Irradiator—a facility that uses radioactive sealed sources for the irradiation of objects or materials and in which radiation dose rates exceeding five grays (500 rads) per hour exist at one meter from the sealed radioactive

sources in air or water, as applicable for the irradiator type, but does not include irradiators in which both the sealed source and the area subject to irradiation are contained within a device and are not accessible to personnel.

Irradiator Operator—an individual who has successfully completed the training and testing described in LAC 33:XV.1735 and is authorized by the terms of the license to operate the irradiator without a supervisor present.

Irradiator Operator Supervisor—an individual who meets the requirements for an irradiator operator and who physically oversees operation of the irradiator by an individual who is currently receiving training and testing described in LAC 33:XV.1735.

Panoramic Dry-Source-Storage Irradiator—an irradiator in which the irradiations occur in air in areas potentially accessible to personnel and in which the sources are stored in shields made of solid materials. The term includes beam-type dry-source-storage irradiators in which only a narrow beam of radiation is produced for performing irradiations.

Panoramic Irradiator—an irradiator in which the irradiations are done in air in areas potentially accessible to personnel. The term includes beam-type irradiators.

Panoramic Wet-Source-Storage Irradiator—an irradiator in which the irradiations occur in air in areas potentially accessible to personnel and in which the sources are stored under water in a storage pool.

Pool Irradiator—any irradiator at which the sources are stored or used in a pool of water including panoramic wet-source-storage irradiators and underwater irradiators.

Product Conveyor System—a system for moving the product to be irradiated to, from, and within the area where irradiation takes place.

Radiation Room—a shielded room in which irradiations take place. Underwater irradiators do not have radiation rooms.

Sealed Source—any radioactive material that is used as a source of radiation and is encased in a capsule designed to prevent leakage or escape of the byproduct material.

Seismic Area—any area where the probability of a horizontal acceleration in rock of more than 0.3 times the acceleration of gravity in 250 years is greater than 10 percent, as designated by the U.S. Geological Survey.

Underwater Irradiator—an irradiator in which the sources always remain shielded under water and humans do not have access to the sealed sources or the space subject to irradiation without entering the pool.

AUTHORITY NOTE: Promulgated in accordance with R.S. 30:2001 et seq.

HISTORICAL NOTE: Promulgated by the Department of Environmental Quality, Office of Air Quality and Radiation Protection, Radiation Protection Division, LR 24:2112 (November 1998).

§1705. License Required

A. No person shall manufacture, produce, acquire, receive, possess, use, or transfer radioactive material for use in an irradiator, except in accordance with a specific license issued by the department, the Nuclear Regulatory Commission, or an agreement state. Specific license application procedures and requirements may be found in LAC 33:XV.Chapter 3.

AUTHORITY NOTE: Promulgated in accordance with R.S. 30:2001 et seq.

HISTORICAL NOTE: Promulgated by the Department of Environmental Quality, Office of Air Quality and Radiation Protection, Radiation Protection Division, LR 24:2113 (November 1998), amended by the Office of Environmental Assessment, Environmental Planning Division, LR 26:2603 (November 2000).

§1707. Start of Construction

A. An applicant for a license shall not begin construction of a new irradiator prior to the submission to the Office of Environmental Compliance, Emergency and Radiological Services Division, of both an application for a license for the irradiator and any fee required by the applicable state requirement or statute. As used in this Chapter, the term *construction* includes the construction of any portion of the permanent irradiator structure on the site but does not include engineering and design work, purchase of a site, site surveys or soil testing, site preparation, site excavation, construction of warehouse or auxiliary structures, and other similar tasks. Any activities undertaken prior to the issuance of a license are entirely at the risk of the applicant and have no bearing on the issuance of a license with respect to the requirements of the appropriate state statute, rules, regulations, and orders issued under the appropriate state statute.

AUTHORITY NOTE: Promulgated in accordance with R.S. 30:2001 et seq.

HISTORICAL NOTE: Promulgated by the Department of Environmental Quality, Office of Air Quality and Radiation Protection, Radiation Protection Division, LR 24:2113 (November 1998), amended by the Office of Environmental Assessment, Environmental Planning Division, LR 26:2603 (November 2000), amended by the Office of the Secretary, Legal Affairs Division, LR 31:2538 (October 2005).

§1709. Applications for Exemptions

A. Any application for a license or for amendment of a license authorizing use of a teletherapy-type unit for irradiation of materials or objects may include proposed alternatives for the requirements of this Chapter. The department shall approve the proposed alternatives if the applicant provides adequate rationale for the proposed alternatives and demonstrates that they are likely to provide an adequate level of safety for workers and the public.

AUTHORITY NOTE: Promulgated in accordance with R.S. 30:2001 et seq.

HISTORICAL NOTE: Promulgated by the Department of Environmental Quality, Office of Air Quality and Radiation Protection, Radiation Protection Division, LR 24:2113 (November 1998), amended by the Office of Environmental Assessment, Environmental Planning Division, LR 26:2603 (November 2000).

§1711. Request for Written Statements

A. Each license is issued with the condition that the licensee shall, at any time before expiration of the license and upon the department's request, submit a written statement to the Office of Environmental Compliance, Emergency and Radiological Services Division, to enable the department to determine whether the license should be modified, suspended, or revoked.

AUTHORITY NOTE: Promulgated in accordance with R.S. 30:2001 et seq.

HISTORICAL NOTE: Promulgated by the Department of Environmental Quality, Office of Air Quality and Radiation Protection, Radiation Protection Division, LR 24:2113 (November 1998), amended by the Office of Environmental Assessment, Environmental Planning Division, LR 26:2603 (November 2000), amended by the Office of the Secretary, Legal Affairs Division, LR 31:2538 (October 2005).

§1713. Performance Criteria for Sealed Sources

A. Requirements for sealed sources installed after promulgation of this Chapter:

1. shall have been evaluated by the department, the Nuclear Regulatory Commission, or an agreement state in accordance with 10 CFR 32.210;

2. shall be doubly encapsulated;

3. shall use radioactive material that is as nondispersible as practical and that is as insoluble as practical if the source is used in a wet-source-storage or wet-source-change irradiator;

4. shall be encapsulated in a material resistant to general corrosion and to localized corrosion, such as 316L stainless steel or other material with equivalent resistance, if the sources are for use in irradiator pools; and

5. in prototype testing of the sealed source, shall have been leak-tested and found leak-free after each of the tests described in Subsections B-G of this Section.

B. Temperature. The test source shall be held at -40°C for 20 minutes, 600°C for one hour, and then be subjected to thermal shock test with a temperature drop from 600°C to 20°C within 15 seconds.

C. Pressure. The test source shall be twice subjected for at least five minutes to an absolute external pressure of 2 million newtons per square meter.

D. Impact. A 2 kilogram steel weight, 2.5 centimeters in diameter, shall be dropped from a height of 1 meter onto the test source.

E. Vibration. The test source shall be subjected three times for 10 minutes each to vibrations sweeping from 25 hertz to 500 hertz with a peak amplitude of five times the acceleration of gravity. In addition, each test source shall be vibrated for 30 minutes at each resonant frequency found.

F. Puncture. A 50 gram weight and pin, 0.3 centimeter pin diameter, shall be dropped from a height of 1 meter onto the test source.

G. Bend. If the length of the source is more than 15 times larger than the minimum cross-sectional dimension, the test source shall be subjected to a force of 2,000 newtons at its center equidistant from two support cylinders, the distance between which is 10 times the minimum cross-sectional dimension of the source.

AUTHORITY NOTE: Promulgated in accordance with R.S. 30:2001 et seq.

HISTORICAL NOTE: Promulgated by the Department of Environmental Quality, Office of Air Quality and Radiation Protection, Radiation Protection Division, LR 24:2113 (November 1998), amended by the Office of Environmental Assessment, Environmental Planning Division, LR 26:2603 (November 2000).

§1715. Access Control

A. Each entrance to a radiation room at a panoramic irradiator shall have a door or other physical barrier to prevent inadvertent entry of personnel, if the sources are not in the shielded position. Product conveyor systems may serve as barriers as long as they reliably and consistently function as a barrier. It shall not be possible to move the sources out of their shielded position if the door or barrier is open. Opening the door or barrier while the sources are exposed shall cause the sources to return promptly to the shielded position. The personnel entrance door or barrier shall have a lock that is operated by the same key used to move the sources. The control panel lock shall be designed so that the key cannot be removed unless the sources have been returned to the shielded position. The doors and barriers shall not prevent any individual in the radiation room from leaving.

B. In addition, each entrance to a radiation room at a panoramic irradiator shall have an independent backup access control to detect personnel entry while the sources are exposed. Detection of entry while the sources are exposed shall cause the sources to return to their fully shielded position and shall also activate a visible and audible alarm to make the individual entering the room aware of the hazard. The alarm shall also alert at least one other individual who is on-site of the entry. That individual shall be trained on how to respond to the alarm and prepared to promptly render or summon assistance.

C. A radiation monitor shall be provided to detect the presence of high radiation levels in the radiation room of a panoramic irradiator before personnel entry. The monitor shall be integrated with personnel access door locks to prevent room access when radiation levels are high. Attempted personnel entry while the monitor measures high radiation levels shall activate the alarm described in Subsection B of this Section. The monitor may be located in the entrance, normally referred to as the maze, but not in the direct radiation beam.

D. Before the sources move from their shielded position in a panoramic irradiator, the source control shall automatically activate conspicuous visible and audible alarms to alert people in the radiation room that the sources shall be moved from their shielded position. The alarms shall give individuals enough time to leave the room before the sources leave the shielded position.

E. Each radiation room at a panoramic irradiator shall have a clearly visible and readily accessible control that would allow an individual in the room to make the sources return to their fully shielded position.

F. Each radiation room of a panoramic irradiator shall contain a control that prevents the sources from moving from the shielded position unless the control has been activated and the door or barrier to the radiation room has been closed within a preset time after activation of the control.

G. Each entrance to the radiation room of a panoramic irradiator and each entrance to the area within the personnel access barrier of an underwater irradiator shall have a sign bearing the radiation symbol and the words, "Caution (or danger) radioactive material." Panoramic irradiators shall also have a sign stating "Grave danger, very high radiation area," but the sign may be removed, covered, or otherwise made inoperative when the sources are fully shielded.

H. If the radiation room of a panoramic irradiator has roof plugs or other movable shielding, it shall not be possible to operate the irradiator unless the shielding is in its proper location. The requirement may be met by interlocks that prevent operation if shielding is not placed properly or by an operating procedure requiring inspection of shielding before operating.

I. Underwater irradiators shall have a personnel access barrier around the pool, which shall be locked to prevent access when the irradiator is not attended. Only operators or facility management shall have access to keys that operate the personnel access barrier. There shall be an intrusion alarm to detect unauthorized entry when the personnel access barrier is locked. Activation of the intrusion alarm shall alert an individual who is not necessarily on-site, but who is prepared to respond or summon assistance.

AUTHORITY NOTE: Promulgated in accordance with R.S. 30:2001 et seq.

HISTORICAL NOTE: Promulgated by the Department of Environmental Quality, Office of Air Quality and Radiation Protection, Radiation Protection Division, LR 24:2114 (November 1998).

§1717. Shielding

A. The radiation dose rate in areas that are normally occupied during operation of a panoramic irradiator shall not exceed 0.02 millisievert (2 mrem) per hour at any location 30 centimeters or more from the wall of the room when the sources are exposed. The dose rate shall be averaged over an area not to exceed 100 square centimeters having no linear dimension greater than 20 centimeters. Any area where the radiation dose rate exceeds 0.02 millisievert (2 mrem) per hour shall be locked, roped off, or posted.

B. The radiation dose at 30 centimeters over the edge of the pool of a pool irradiator shall not exceed 0.02 millisievert (2 mrem) per hour when the sources are in the fully shielded position.

C. The radiation dose rate at one meter from the shield of a dry-source-storage panoramic irradiator when the source is shielded shall not exceed 0.02 millisievert (2 mrem) per hour and at 5 centimeters from the shield shall not exceed 0.2 millisievert (20 mrem) per hour.

AUTHORITY NOTE: Promulgated in accordance with R.S. 30:2001 et seq.

HISTORICAL NOTE: Promulgated by the Department of Environmental Quality, Office of Air Quality and Radiation Protection, Radiation Protection Division, LR 24:2114 (November 1998).

§1719. Fire Protection

A. The radiation room at a panoramic irradiator shall have heat and smoke detectors. The detectors shall activate an audible alarm. The alarm shall be capable of alerting a person who is prepared to summon assistance promptly. The sources shall automatically become fully shielded if a fire is detected.

B. The radiation room at a panoramic irradiator shall be equipped with a fire extinguishing system capable of extinguishing a fire without the entry of personnel into the room. The system for the radiation room shall have a shut-off valve to control flooding into unrestricted areas.

AUTHORITY NOTE: Promulgated in accordance with R.S. 30:2001 et seq.

HISTORICAL NOTE: Promulgated by the Department of Environmental Quality, Office of Air Quality and Radiation Protection, Radiation Protection Division, LR 24:2115 (November 1998).

§1721. Radiation Monitors

A. Irradiators with automatic product conveyor systems shall have a radiation monitor with an audible alarm located to detect loose radioactive sources that are carried toward the product exit. If the monitor detects a source, an alarm shall sound and product conveyors shall stop automatically. The alarm shall be capable of alerting an individual in the facility who is prepared to summon assistance. Underwater irradiators in which the product moves within an enclosed stationary tube are exempt from the requirements of this Subsection.

B. Underwater irradiators that are not in a shielded radiation room shall have a radiation monitor over the pool to detect abnormal radiation levels. The monitor shall have an audible alarm and a visible indicator at entrances to the personnel access barrier around the pool. The audible alarm may have a manual shut-off. The alarm shall be capable of alerting an individual who is prepared to respond promptly.

AUTHORITY NOTE: Promulgated in accordance with R.S. 30:2001 et seq.

HISTORICAL NOTE: Promulgated by the Department of Environmental Quality, Office of Air Quality and Radiation Protection, Radiation Protection Division, LR 24:2115 (November 1998).

§1723. Control of Source Movement

A. The mechanism that moves the sources of a panoramic irradiator shall require a key to actuate. Actuation of the mechanism shall cause an audible signal to indicate that the sources are leaving the shielded position. Only one key may be in use at any time, and only operators or facility

management may possess it. The key shall be attached to a portable radiation survey meter by a chain or cable. The lock for source control shall be designed so that the key may not be removed if the sources are in an unshielded position. The door to the radiation room shall require the same key.

B. The console of a panoramic irradiator shall have a source position indicator that indicates when the sources are in the fully shielded position, when they are in transit, and when the sources are exposed.

C. The control console of a panoramic irradiator shall have a control that promptly returns the sources to the shielded position.

D. Each control for a panoramic irradiator shall be clearly marked as to its function.

AUTHORITY NOTE: Promulgated in accordance with R.S. 30:2001 et seq.
HISTORICAL NOTE: Promulgated by the Department of Environmental Quality, Office of Air Quality and Radiation Protection, Radiation Protection Division, LR 24:2115 (November 1998).

§1725. Irradiator Pools

A. For licenses initially issued after promulgation of this Chapter, irradiator pools shall either:

1. have a water-tight stainless steel liner or a liner metallurgically compatible with other components in the pool; or

2. be constructed so that there is a low likelihood of substantial leakage, and have a surface designed to facilitate decontamination. In either case, the licensee shall have a method to safely store the sources during repairs of the pool.

B. For licenses initially issued after promulgation of this Chapter, irradiator pools shall have no outlets more than 0.5 meter below the normal low water level that could allow water to drain out of the pool. Pipes that have intakes more than 0.5 meter below the normal low water level and that could act as siphons shall have siphon breakers to prevent the siphoning of pool water.

C. A means shall be provided to replenish water losses from the pool.

D. A visible indicator shall be provided in a clearly observable location to indicate if the pool water level is below the normal low water level or above the normal high water level.

E. Irradiator pools shall be equipped with a purification system designed to be capable of maintaining the water during normal operation at a conductivity of 20 microsiemens per centimeter or less and with a clarity such that the sources can be seen clearly.

F. A physical barrier, such as a railing or cover, shall be used around or over irradiator pools during normal operation to prevent personnel from accidentally falling into the pool. The barrier may be removed during maintenance, inspection, and service operations.

G. If long-handled tools or poles are used in irradiator pools, the radiation dose rate to the operator at the handling areas of the tools may not exceed 0.02 millisievert (2 mrem) per hour.

AUTHORITY NOTE: Promulgated in accordance with R.S. 30:2001 et seq.
HISTORICAL NOTE: Promulgated by the Department of Environmental Quality, Office of Air Quality and Radiation Protection, Radiation Protection Division, LR 24:2115 (November 1998).

§1727. Source Rack Protection

A. If the product to be irradiated moves on a product conveyor system, the source rack and the mechanism that moves the rack shall be protected by a carrier or guides to prevent products and product carriers from hitting or touching the rack or mechanism.

AUTHORITY NOTE: Promulgated in accordance with R.S. 30:2001 et seq.
HISTORICAL NOTE: Promulgated by the Department of Environmental Quality, Office of Air Quality and Radiation Protection, Radiation Protection Division, LR 24:2115 (November 1998).

§1729. Power Failures

A. If electrical power at a panoramic irradiator is lost for longer than ten seconds, the sources shall automatically return to the shielded position.

B. The lock on the door of the radiation room of a panoramic irradiator shall remain locked in the event of a power failure.

C. During a power failure, the area of any irradiator where sources are located shall be entered only when using an operable and calibrated radiation survey meter.

AUTHORITY NOTE: Promulgated in accordance with R.S. 30:2001 et seq.
HISTORICAL NOTE: Promulgated by the Department of Environmental Quality, Office of Air Quality and Radiation Protection, Radiation Protection Division, LR 24:2116 (November 1998).

§1731. Design Requirements

A. Shielding. For panoramic irradiators, the licensee shall design shielding walls to meet generally accepted building code requirements for reinforced concrete and design the walls, wall penetrations, and entranceways to meet the radiation shielding requirements of LAC 33:XV.1717. If the irradiator shall use more than 2×10^{17} becquerels (5 million Ci) of activity, the licensee shall evaluate the effects of heating of the shielding walls by the irradiator sources.

B. Foundations. For panoramic irradiators, the licensee shall design the foundation, with consideration given to soil characteristics, to ensure it is adequate to support the weight of the facility shield walls.

C. Pool Integrity. For pool irradiators, the licensee shall design the pool to assure that it is leak resistant, that it is strong enough to bear the weight of the pool water and shipping casks, that a dropped cask would not fall on sealed

sources, that all outlets or pipes meet the requirements of LAC 33:XV.1725.B, and that metal components are metallurgically compatible with other components in the pool.

D. Water Handling System. For pool irradiators, the licensee shall verify that the design of the water purification system is adequate to meet the requirements of LAC 33:XV.1725.E. The system shall be designed so that water leaking from the system does not drain to unrestricted areas without being monitored.

E. Radiation Monitors. For all irradiators, the licensee shall evaluate the location and sensitivity of the monitor to detect sources carried by the product conveyor system as required by LAC 33:XV.1721.A. The licensee shall verify that the product conveyor is designed to stop before a source on the product conveyor would cause a radiation overexposure to any person. For pool irradiators, if the licensee uses radiation monitors to detect contamination under LAC 33:XV.1743.B, the licensee shall verify that the design of radiation monitoring systems to detect pool contamination includes sensitive detectors located close to where contamination is likely to concentrate.

F. Source Rack. For pool irradiators, the licensee shall verify that there are no crevices on the source or between the source and source holder that would promote corrosion on a critical area of the source. For panoramic irradiators, the licensee shall determine that source rack drops due to loss of power shall not damage the source rack and that source rack drops due to failure of cables, or alternate means of support, shall not cause loss of integrity of sealed sources. For panoramic irradiators, the licensee shall review the design of the mechanism that moves the sources to assure that the likelihood of a stuck source is low and that, if the rack sticks, a means exists to free it with minimal risk to personnel.

G. Access Control. For panoramic irradiators, the licensee shall verify from the design and logic diagram that the access control system shall meet the requirements of LAC 33:XV.1717.

H. Fire Protection. For panoramic irradiators, the licensee shall verify that the number, locations, and spacing of the smoke and heat detectors are appropriate to detect fires and that the detectors are protected from mechanical and radiation damage. The licensee shall verify that the design of the fire extinguishing system provides the necessary discharge patterns, densities, and flow characteristics for complete coverage of the radiation room and that the system is protected from mechanical and radiation damage.

I. Source Return. For panoramic irradiators, the licensee shall verify that the source rack shall automatically return to the fully shielded position if power is lost for more than 10 seconds.

J. Seismic. For panoramic irradiators to be built in seismic areas, the licensee shall design the reinforced concrete radiation shields to retain their integrity in the event of an earthquake by designing to the seismic requirements of an appropriate source, such as the American Concrete Institute Standard ACI 318-89, *Building Code Requirements for Reinforced Concrete*, Chapter 21, "Special Provisions for Seismic Design," or local building codes, if current.

K. Wiring. For panoramic irradiators, the licensee shall verify that electrical wiring and electrical equipment in the radiation room are selected to minimize failures due to prolonged exposure to radiation.

L. Irradiators whose construction begins after promulgation of this Chapter shall meet the design requirements of this Section.

AUTHORITY NOTE: Promulgated in accordance with R.S. 30:2001 et seq.

HISTORICAL NOTE: Promulgated by the Department of Environmental Quality, Office of Air Quality and Radiation Protection, Radiation Protection Division, LR 24:2116 (November 1998).

§1733. Construction Monitoring and Acceptance Testing

A. Shielding. For panoramic irradiators, the licensee shall monitor the construction of the shielding to verify that its construction meets design specifications and generally accepted building code requirements for reinforced concrete.

B. Foundations. For panoramic irradiators, the licensee shall monitor the construction of the foundations to verify that their construction meets design specifications.

C. Pool Integrity. For pool irradiators, the licensee shall verify that the pool meets design specifications and shall test the integrity of the pool. The licensee shall verify that outlets and pipes meet the requirements of LAC 33:XV.1725.B.

D. Water Handling System. For pool irradiators, the licensee shall verify that the water purification system, the conductivity meter, and the water level indicators operate properly.

E. Radiation Monitors. For all irradiators, the licensee shall verify the proper operation of the monitor to detect sources carried on the product conveyor system and the related alarms and interlocks required by LAC 33:XV.1721.A. For pool irradiators, the licensee shall verify the proper operation of the radiation monitors and the related alarm if used to meet the requirements of LAC 33:XV.1743.B. For underwater irradiators, the licensee shall verify the proper operation of the over-the-pool monitor, alarms, and interlocks required by LAC 33:XV.1721.A.

F. Source Rack. For panoramic irradiators, the licensee shall test the movement of the source racks for proper operation prior to source loading; testing shall include source rack lowering due to simulated loss of power. For all irradiators with product conveyor systems, the licensee shall observe and test the operation of the conveyor system to assure that the requirements in LAC 33:XV.1729 are met for protection of the source rack and the mechanism that moves the rack; testing shall include tests of any limit switches and

interlocks used to protect the source rack and mechanism that moves that rack from moving product carriers.

G. Access Control. For panoramic irradiators, the licensee shall test the completed access control system to assure that it functions as designed and that all alarms, controls, and interlocks work properly.

H. Fire Protection. For panoramic irradiators, the licensee shall test the ability of the heat and smoke detectors to detect a fire, to activate alarms, and to cause the source rack to automatically become fully shielded. The licensee shall test the operability of the fire extinguishing system.

I. Source Return. For panoramic irradiators, the licensee shall demonstrate that the source racks can be returned to their fully shielded positions without power.

J. Computer Systems. For panoramic irradiators that use a computer system to control the access control system, the licensee shall verify that the access control system shall operate properly if power is lost and shall verify that the computer has security features that prevent an irradiator operator from commanding the computer to override the access control system when the system is required to be operable.

K. Wiring. For panoramic irradiators, the licensee shall verify that the electrical wiring and electrical equipment that were installed meet the design specifications.

L. The requirements of this Section shall be met for irradiators whose construction begins after promulgation of this Chapter. The requirements shall be met prior to loading sources.

AUTHORITY NOTE: Promulgated in accordance with R.S. 30:2001 et seq.

HISTORICAL NOTE: Promulgated by the Department of Environmental Quality, Office of Air Quality and Radiation Protection, Radiation Protection Division, LR 24:2116 (November 1998).

§1735. Training

A. Before an individual is permitted to act as an irradiator operator without a supervisor present, the individual shall be instructed in:

1. the fundamentals of radiation protection applied to irradiators. This shall include the differences between external radiation and radioactive contamination, units of radiation dose, dose limits, why large radiation doses shall be avoided, how shielding and access controls prevent large doses, how an irradiator is designed to prevent contamination, the proper use of survey meters and personnel dosimeters, other radiation safety features of an irradiator, and the basic function of the irradiator;

2. the requirements of this Chapter and LAC 33:XV.Chapter 10 that are relevant to the irradiator;

3. the operation of the irradiator;

4. those operating and emergency procedures listed in LAC 33:XV.1737 that the individual is responsible for performing; and

5. case histories of accidents or problems involving irradiators.

B. Before an individual is permitted to act as an irradiator operator without a supervisor present, the individual shall pass a written test on the instruction received, consisting primarily of questions based on the licensee's operating and emergency procedures that the individual is responsible for performing and other operations necessary to safely operate the irradiator without supervision.

C. Before an individual is permitted to act as an irradiator operator without a supervisor present, the individual shall have received on-the-job training or simulator training in the use of the irradiator as described in the license application. The individual shall also demonstrate the ability to perform those portions of the operating and emergency procedures that he or she is to perform.

D. The licensee shall conduct safety reviews for irradiator operators at least annually. The licensee shall give each operator a brief written test on the information. Each safety review shall include, to the extent appropriate, each of the following:

1. changes in operating and emergency procedures since the last review, if any;

2. changes in regulations and license conditions since the last review, if any;

3. reports on recent accidents, mistakes, or problems that have occurred at irradiators, if any;

4. relevant results of inspections of operator safety performance;

5. relevant results of the facility's inspection and maintenance checks; and

6. a drill to practice an emergency or abnormal event procedure.

E. The licensee shall evaluate the safety performance of each irradiator operator at least annually to ensure that regulations, license conditions, and operating, safety, and emergency procedures are followed. The licensee shall discuss the results of the evaluation with the operator and shall instruct the operator on how to correct any mistakes or deficiencies observed.

F. Individuals who shall be permitted unescorted access to the radiation room of the irradiator or the area around the pool of an underwater irradiator, but who have not received the training required for operators and the radiation safety officer, shall be instructed and tested in any precautions they should take to avoid radiation exposure, any procedures or parts of procedures listed in LAC 33:XV.1737 that they are expected to perform or comply with, and their proper response to alarms required in this Chapter. Tests may be oral.

G. Individuals who shall be prepared to respond to alarms required by LAC 33:XV.1715.B and I, 1719.A, 1721.A and B, and 1743.B shall be trained and tested on

how to respond. Each individual shall be retested at least annually. Tests may be oral.

AUTHORITY NOTE: Promulgated in accordance with R.S. 30:2001 et seq.
HISTORICAL NOTE: Promulgated by the Department of Environmental Quality, Office of Air Quality and Radiation Protection, Radiation Protection Division, LR 24:2117 (November 1998).

§1737. Operating and Emergency Procedures

A. The licensee shall have and follow written operating procedures for:

1. operation of the irradiator, including entering and leaving the radiation room;

2. use of personnel dosimeters;

3. surveying the shielding of panoramic irradiators;

4. monitoring pool water for contamination while the water is in the pool and before release of pool water to unrestricted areas;

5. leak testing of sources;

6. inspection and maintenance checks required by LAC 33:XV.1745;

7. loading, unloading, and repositioning sources, if the operations shall be performed by the licensee; and

8. inspection of movable shielding required by LAC 33:XV.1715.H, if applicable.

B. The licensee shall have and follow emergency or abnormal event procedures appropriate for the irradiator type for:

1. sources stuck in the unshielded position;

2. personnel overexposures;

3. radiation alarms from the product exit portal monitor or pool monitor;

4. detection of leaking sources, pool contamination, or alarm caused by contamination of pool water;

5. low or high water level indicators, abnormal water loss, or leakage from the source storage pool;

6. prolonged loss of electrical power;

7. fire alarms or explosions in the radiation room;

8. alarms indicating unauthorized entry into the radiation room, area around pool, or another alarmed area;

9. natural phenomena, including an earthquake, a tornado, flooding, or other phenomena as appropriate for the geographical location of the facility; and

10. jamming of automatic conveyor systems.

C. The licensee may revise operating and emergency procedures without department approval only if all of the following conditions are met:

1. the revisions do not reduce the safety of the facility;

2. the revisions are consistent with the outline or summary of procedures submitted with the license application;

3. the revisions have been reviewed and approved by the radiation safety officer; and

4. the users or operators are instructed and tested on the revised procedures before they are put into use.

AUTHORITY NOTE: Promulgated in accordance with R.S. 30:2001 et seq.
HISTORICAL NOTE: Promulgated by the Department of Environmental Quality, Office of Air Quality and Radiation Protection, Radiation Protection Division, LR 24:2118 (November 1998), amended by the Office of Environmental Assessment, Environmental Planning Division, LR 26:2603 (November 2000).

§1739. Personnel Monitoring

A. Irradiator operators shall wear a personnel dosimeter while operating a panoramic irradiator or while in the area around the pool of an underwater irradiator. The personnel dosimeter processor shall be accredited by the National Voluntary Laboratory Accreditation Program for high energy photons in the normal and accident dose ranges in accordance with LAC 33:XV.430.C. Each personnel dosimeter shall be assigned to and worn by only one individual. Film badges shall be processed at least monthly, and other personnel dosimeters shall be processed at least quarterly.

B. Other individuals who enter the radiation room of a panoramic irradiator shall wear a dosimeter, which may be a pocket dosimeter. For groups of visitors, only two people who enter the radiation room are required to wear dosimeters. If pocket dosimeters are used to meet the requirements of this Subsection, a check of their response to radiation shall be done at least annually. Acceptable dosimeters shall read within ±30 percent of the true radiation dose.

AUTHORITY NOTE: Promulgated in accordance with R.S. 30:2001 et seq.
HISTORICAL NOTE: Promulgated by the Department of Environmental Quality, Office of Air Quality and Radiation Protection, Radiation Protection Division, LR 24:2118 (November 1998), amended by the Office of Environmental Assessment, Environmental Planning Division, LR 29:1470 (August 2003).

§1741. Radiation Surveys

A. A radiation survey of the area outside the shielding of the radiation room of a panoramic irradiator shall be conducted with the sources in the exposed position before the facility starts to operate. A radiation survey of the area above the pool of irradiators shall be conducted after the sources are loaded, but before the facility starts to operate. Additional radiation surveys of the shielding shall be performed at intervals not to exceed three years and before resuming operation after addition of new sources or any modification to the radiation room shielding or structure that might increase dose rates.

B. If the radiation levels specified in LAC 33:XV.1717 are exceeded, the facility shall be modified to comply with the requirements in LAC 33:XV.1717.

C. Portable radiation survey meters shall be calibrated at least annually to an accuracy of ±20 percent for the gamma energy of the sources in use. The calibration shall be done at two points on each scale or, for digital instruments, at one point per decade over the range that shall be used. Portable radiation survey meters shall be of a type that does not saturate and read zero at high radiation dose rates.

D. Water from the irradiator pool, other potentially contaminated liquids, and sediments from pool vacuuming shall be monitored for radioactive contamination before release to unrestricted areas. Radioactive concentrations shall not exceed those specified in LAC 33:XV.499.Appendix B.Table II, Column 2, or Appendix B.Table III, "Annual Limits on Intake (ALIs) and Derived Air Concentrations (DAC) of Radionuclides for Occupational Exposure, Effluent Concentrations, Concentrations for Release to Sanitary Sewerage."

E. Before releasing resins for unrestricted use, they shall be monitored before release in an area with a background level less than 0.5 microsievert (0.05 mrem) per hour. The resins may be released only if the survey does not detect radiation levels above background radiation levels. The survey meter used shall be capable of detecting radiation levels of 0.5 microsievert (0.05 mrem) per hour.

AUTHORITY NOTE: Promulgated in accordance with R.S. 30:2001 et seq.

HISTORICAL NOTE: Promulgated by the Department of Environmental Quality, Office of Air Quality and Radiation Protection, Radiation Protection Division, LR 24:2118 (November 1998).

§1743. Detection of Leaking Sources

A. Each dry-source-storage sealed source shall be tested for leakage at intervals not to exceed six months using a leak test kit or method approved by the department, the Nuclear Regulatory Commission, an agreement state, or a licensing state. In the absence of a certificate from a transferor that a test has been made within the six months before the transfer, the sealed source shall not be used until tested. The test shall be capable of detecting the presence of 200 becquerels (0.005 μCi) of radioactive material and shall be performed by a person approved by the department, the Nuclear Regulatory Commission, an agreement state, or a licensing state to perform the test.

B. For pool irradiators, sources shall not be put into the pool unless the licensee tests the sources for leaks or has a certificate from a transferor that a leak test has been done within the six months before the transfer. Water from the pool shall be checked for contamination each day the irradiator operates. The check may be done either by using a radiation monitor on a pool water circulating system or by analysis of a sample of pool water. If a check for contamination is done by analysis of a sample of pool water, the results of the analysis shall be available within 24 hours. If the licensee uses a radiation monitor on a pool water circulating system, the detection of above normal radiation levels shall activate an alarm. The alarm set-point shall be set as low as practical, but high enough to avoid false alarms. The licensee may reset the alarm set-point to a higher level if necessary to operate the pool water purification system to clear up contamination in the pool if specifically provided for in written emergency procedures.

C. If a leaking source is detected, the licensee shall arrange to remove the leaking source from service and have it decontaminated, repaired, or disposed of by a licensee that is authorized to perform these functions by the department, the Nuclear Regulatory Commission, an agreement state, or a licensing state. The licensee shall promptly check its personnel, equipment, facilities, and irradiated product for radioactive contamination. No product shall be shipped until the product has been checked and found free of contamination. If a product has been shipped that may have been inadvertently contaminated, the licensee shall arrange to locate and survey that product for contamination. If any personnel are found to be contaminated, decontamination shall be performed promptly. If contaminated equipment, facilities, or products are found, the licensee shall arrange to have them decontaminated or disposed of by a licensee that is authorized to perform these functions by the department, the Nuclear Regulatory Commission, an agreement state, or a licensing state. If a pool is contaminated, the licensee shall arrange to clean the pool until the contamination levels do not exceed the appropriate concentration in LAC 33:XV.499.Appendix B.Table II, Column 2. The licensee shall report all incidents in accordance with LAC 33:XV.486.

AUTHORITY NOTE: Promulgated in accordance with R.S. 30:2001 et seq.

HISTORICAL NOTE: Promulgated by the Department of Environmental Quality, Office of Air Quality and Radiation Protection, Radiation Protection Division, LR 24:2119 (November 1998), repromulgated LR 24:2243 (December 1998), amended by the Office of Environmental Assessment, Environmental Planning Division, LR 26:2603 (November 2000).

§1745. Inspection and Maintenance

A. The licensee shall perform inspection and maintenance checks that include, as a minimum, each of the following at the frequency specified in the license or license application:

1. operability of each aspect of the access control system required by LAC 33:XV.1715;

2. functioning of the source position indicator required by LAC 33:XV.1723.B;

3. operability of the radiation monitor for radioactive contamination in pool water, required by LAC 33:XV.1743.B, using a radiation check source, if applicable;

4. operability of the over-pool radiation monitor at underwater irradiators, as required by LAC 33:XV.1721.B;

5. operability of the product exit monitor required by LAC 33:XV.1721.A;

6. operability of the emergency source return control required by LAC 33:XV.1723.C;

7. visual inspection of leak-tightness of systems through which pool water circulates;

8. operability of the heat and smoke detectors and extinguisher system required by LAC 33:XV.1719, without turning extinguishers on;

9. operability of the means of pool water replenishment required by LAC 33:XV.1725.C;

10. operability of the indicators of high and low pool water levels required by LAC 33:XV.1725.D;

11. operability of the intrusion alarm required by LAC 33:XV.1715.I, if applicable;

12. functioning and wear of the system, mechanisms, and cables used to raise and lower sources;

13. condition of the barrier to prevent products from hitting the sources or source mechanism, as required by LAC 33:XV.1727;

14. amount of water added to the pool to determine if the pool is leaking;

15. electrical wiring on required safety systems for radiation damage; and

16. pool water conductivity measurements and analysis, as required by LAC 33:XV.1747.B.

B. Malfunctions and defects found during inspection and maintenance checks shall be repaired within time frames specified in the license or license application.

AUTHORITY NOTE: Promulgated in accordance with R.S. 30:2001 et seq.
HISTORICAL NOTE: Promulgated by the Department of Environmental Quality, Office of Air Quality and Radiation Protection, Radiation Protection Division, LR 24:2119 (November 1998).

§1747. Pool Water Purity

A. Pool water purification systems shall be run sufficiently to maintain the conductivity of the pool water below 20 microsiemens per centimeter under normal circumstances. If pool water conductivity rises above 20 microsiemens per centimeter, the licensee shall take prompt actions to lower the pool water conductivity and shall take corrective actions to prevent future recurrences.

B. The licensee shall measure the pool water conductivity frequently, but no less than weekly, to assure that the conductivity remains below 20 microsiemens per centimeter. Conductivity meters shall be calibrated at least annually.

AUTHORITY NOTE: Promulgated in accordance with R.S. 30:2001 et seq.
HISTORICAL NOTE: Promulgated by the Department of Environmental Quality, Office of Air Quality and Radiation Protection, Radiation Protection Division, LR 24:2120 (November 1998).

§1749. Attendance during Operation

A. Both an irradiator operator and at least one other individual, who is trained as to how to respond and prepared to promptly render or summon assistance if the access control alarm sounds, shall be present on site:

1. whenever the irradiator is operated using an automatic product conveyor system; and

2. whenever the product is moved into or out of the radiation room when the irradiator is operated in a batch mode.

B. At a panoramic irradiator at which static irradiations with no movement of the product are occurring, a person who has received the training as to how to respond to alarms described in LAC 33:XV.1735.G shall be on site.

C. At an underwater irradiator, an irradiator operator shall be present at the facility whenever the product is moved into or out of the pool. Individuals who move the product into or out of the pool of an underwater irradiator need not be qualified as irradiator operators; however, they shall have received the training described in LAC 33:XV.1735.F and G. Static irradiations may be performed without a person present at the facility.

AUTHORITY NOTE: Promulgated in accordance with R.S. 30:2001 et seq.
HISTORICAL NOTE: Promulgated by the Department of Environmental Quality, Office of Air Quality and Radiation Protection, Radiation Protection Division, LR 24:2120 (November 1998).

§1751. Entering and Leaving the Radiation Room

A. Upon first entering the radiation room of a panoramic irradiator after an irradiation, the irradiator operator shall use a survey meter to determine that the source has returned to its fully shielded position. The operator shall check the functioning of the survey meter with a radiation check source prior to entry.

B. Before exiting from and locking the door to the radiation room of a panoramic irradiator prior to a planned irradiation, the irradiator operator shall:

1. visually inspect the entire radiation room to verify that no one else is in it; and

2. activate a control in the radiation room that permits the sources to be moved from the shielded position only if the door to the radiation room is locked within a preset time after setting the control.

C. During a power failure, the area around the pool of an underwater irradiator shall not be entered without using an operable and calibrated radiation survey meter, unless the over-the-pool monitor required by LAC 33:XV.1721.B is operating with backup power.

AUTHORITY NOTE: Promulgated in accordance with R.S. 30:2001 et seq.
HISTORICAL NOTE: Promulgated by the Department of Environmental Quality, Office of Air Quality and Radiation Protection, Radiation Protection Division, LR 24:2120 (November 1998).

§1753. Irradiation of Explosive or Flammable Materials

A. Irradiation of explosive material is prohibited unless the licensee has received prior written authorization from the department. Authorization shall not be granted unless the licensee can demonstrate that detonation of the explosive

would not rupture the sealed sources, injure personnel, damage safety systems, or cause radiation overexposures of personnel.

B. Irradiation of more than small quantities of flammable material with a flash point below 140°F is prohibited in panoramic irradiators, unless the licensee has received prior written authorization from the department. Authorization shall not be granted unless the licensee can demonstrate that a fire in the radiation room could be controlled without damage to sealed sources or safety systems and without radiation overexposures of personnel.

AUTHORITY NOTE: Promulgated in accordance with R.S. 30:2001 et seq.

HISTORICAL NOTE: Promulgated by the Department of Environmental Quality, Office of Air Quality and Radiation Protection, Radiation Protection Division, LR 24:2120 (November 1998), amended by the Office of Environmental Assessment, Environmental Planning Division, LR 26:2604 (November 2000).

§1755. Records and Retention Periods

A. The licensee shall maintain the following records at the irradiator for a three year period:

1. records of each individual's training, tests, and safety reviews provided to meet the requirements of LAC 33:XV.1735.A-D, F, and G until three years after the individual terminates work;

2. records of the annual evaluations of the safety performance of LAC 33:XV.1735.E for three years after the evaluation;

3. a copy of the current operating and emergency procedures required by LAC 33:XV.1737 until superseded or the Office of Environmental Compliance, Emergency and Radiological Services Division, terminates the license. Records of the radiation safety officer's review and approval of changes in procedures, as required by LAC 33:XV.1737.C.3, shall be retained for three years from the date of the change;

4. records of radiation survey meter calibrations required by LAC 33:XV.1741 and pool water conductivity meter calibrations required by LAC 33:XV.1747.B until three years from the date of calibration;

5. records of the results of leak tests required by LAC 33:XV.1743.A and the results of contamination checks required by LAC 33:XV.1743.B for three years from the date of each test;

6. records of inspection and maintenance checks required by LAC 33:XV.1745 for three years;

7. records of major malfunctions, significant defects, operating difficulties or irregularities, and major operating problems that involve required radiation safety equipment for three years after repairs are completed; and

8. records of radiation surveys required by LAC 33:XV.1741 for three years from the date of the survey.

B. The licensee shall maintain the following records at the irradiator for the periods specified:

1. a copy of the license, the license conditions, documents incorporated into the license by reference, and amendments thereto until superseded by new documents or until the Office of Environmental Compliance, Emergency and Radiological Services Division, terminates the license for documents not superseded;

2. personnel dosimeter evaluations required by LAC 33:XV.1739 until the Office of Environmental Compliance, Emergency and Radiological Services Division, terminates the license;

3. records of the receipt, transfer, and disposal of all licensed sealed sources as required by LAC 33:XV.104 and 340;

4. records on the design checks required by LAC 33:XV.1731 and the construction control checks as required by LAC 33:XV.1733 until the license is terminated. The records shall be signed and dated. The title or qualification of the person signing shall be included; and

5. records related to decommissioning of the irradiator, as required by LAC 33:XV.325.D.7.

AUTHORITY NOTE: Promulgated in accordance with R.S. 30:2001 et seq.

HISTORICAL NOTE: Promulgated by the Department of Environmental Quality, Office of Air Quality and Radiation Protection, Radiation Protection Division, LR 24:2120 (November 1998), amended by the Office of Environmental Assessment, Environmental Planning Division, LR 26:2604 (November 2000), LR 29:1471 (August 2003), amended by the Office of the Secretary, Legal Affairs Division, LR 31:2538 (October 2005).

§1757. Reports

A. In addition to the reporting requirements in other parts of these regulations, the licensee shall report the following events if not reported under other parts of these regulations:

1. source stuck in an unshielded position;

2. any fire or explosion in a radiation room;

3. damage to the source racks;

4. failure of the cable or drive mechanism used to move the source racks;

5. inoperability of the access control system;

6. detection of radiation source by the product exit monitor;

7. detection of radioactive contamination attributable to licensed radioactive material;

8. structural damage to the pool liner or walls;

9. water loss or leakage from the source storage pool greater than the irradiator pool design parameters submitted by the licensee or applicant; and

10. pool water conductivity exceeding 100 microsiemens per centimeter.

B. The report shall include a telephone report within 24 hours, as described in LAC 33:XV.485.A, and a written report within 30 days, as described in LAC 33:XV.485.B.

AUTHORITY NOTE: Promulgated in accordance with R.S. 30:2001 et seq.

HISTORICAL NOTE: Promulgated by the Department of Environmental Quality, Office of Air Quality and Radiation Protection, Radiation Protection Division, LR 24:2121 (November 1998).

Chapter 20. Radiation Safety Requirements for Wireline Service Operations and Subsurface Tracer Studies

§2001. Purpose

A. The regulations in this Chapter establish radiation safety requirements for persons using sources of radiation for wireline service operations including mineral logging, radioactive markers, and subsurface tracer studies. The requirements of this Chapter are in addition to, and not in substitution for, the requirements of Chapters l, 2, 3, 4, 10, and 15 of these regulations.

AUTHORITY NOTE: Promulgated in accordance with R.S. 30:2001 et seq.

HISTORICAL NOTE: Promulgated by the Department of Environmental Quality, Nuclear Energy Division, LR 13:569 (October 1987), amended by the Office of Air Quality and Radiation Protection, Radiation Protection Division, LR 18:34 (January 1992).

§2002. Scope

A. The regulations in this Chapter apply to all licensees or registrants who use sources of radiation for wireline service operations including mineral logging, radioactive markers, or subsurface tracer studies.

AUTHORITY NOTE: Promulgated in accordance with R.S. 30:2001 et seq.

HISTORICAL NOTE: Promulgated by the Department of Environmental Quality, Nuclear Energy Division, LR 13:569 (October 1987), amended by the Office of Air Quality and Radiation Protection, Radiation Protection Division, LR 18:34 (January 1992).

§2003. Definitions

A. The following definitions apply to these terms as used in this Chapter.

Energy Compensation Source (*ECS*)—a small sealed source, with an activity not exceeding 3.7 MBq (100 microcuries), used within a logging tool, or other tool components, to provide a reference standard to maintain the tool's calibration when in use.

Field Station—a facility where radioactive sources may be stored or used and from which equipment is dispatched to temporary jobsites.

Injection Tool—a device used for controlled subsurface injection of radioactive tracer material.

Logging Supervisor—the individual who provides personal supervision of the utilization of sources of radiation at the well site.

Logging Tool—a device used subsurface to perform well-logging.

Mineral Logging—any logging performed for the purpose of mineral exploration other than for oil or gas.

Personnel Supervision—guidance and instruction by the supervisor who is physically present at the jobsite and watching the performance of the operation in such proximity that contact can be maintained and immediate assistance given as required.

Radioactive Marker—radioactive material placed subsurface or on a structure intended for subsurface use for the purpose of depth determination or direction orientation.

Source Holder—a housing or assembly into which a radioactive source is placed for the purpose of facilitating the handling and use of the source in well-logging operations.

Subsurface Tracer Study—the release of a substance tagged with radioactive material for the purpose of tracing the movement or position of the tagged substance in the well-bore or adjacent formation.

Temporary Jobsite—a location to which radioactive materials have been dispatched to perform wireline service operations or subsurface tracer studies.

Tritium Neutron Generator Target Source—a tritium source used within a neutron generator tube to produce neutrons for use in well-logging applications.

Uranium Sinker Bar—a weight containing depleted uranium used to pull a logging tool down toward the bottom of a well.

Well-Bore—a drilled hole in which wireline service operations and subsurface tracer studies are performed.

Well-Logging—the lowering and raising of measuring devices or tools that may contain sources of radiation into well-bores or cavities for the purpose of obtaining information about the well and/or adjacent formations.

Wireline—a cable containing one or more electrical conductors that is used to lower and raise logging tools in the well-bore.

Wireline Service Operation—any evaluation or mechanical service performed in the well-bore using devices on a wireline.

AUTHORITY NOTE: Promulgated in accordance with R.S. 30:2001 et seq.

HISTORICAL NOTE: Promulgated by the Department of Environmental Quality, Nuclear Energy Division, LR 13:569 (October 1987), amended by the Office of Air Quality and Radiation Protection, Radiation Protection Division, LR 18:34 (January 1992), amended by the Office of Environmental Assessment, Environmental Planning Division, LR 29:1471 (August 2003).

§2004. Prohibition

A. No licensee shall perform wireline service operations with a sealed source or sources unless, prior to

commencement of the operation, the licensee has a written agreement with the well operator, well owner, drilling contractor, or land owner that:

1. in the event a sealed source is lodged downhole, a reasonable effort at recovery will be made; and

2. in the event a decision is made to abandon the sealed source downhole, the requirements of LAC 33:XV.2051 and any other requirements of any state agency having applicable regulations shall be met.

AUTHORITY NOTE: Promulgated in accordance with R.S. 30:2001 et seq.
HISTORICAL NOTE: Promulgated by the Department of Environmental Quality, Nuclear Energy Division, LR 13:569 (October 1987), amended by the Office of Air Quality and Radiation Protection, Radiation Protection Division, LR 18:34 (January 1992), amended by the Office of Environmental Assessment, Environmental Planning Division, LR 30:1667 (August 2004).

§2010. Limits on Levels of Radiation

A. Sources of radiation shall be used, stored, and transported in such a manner that the transportation requirements of Chapter 15 and the dose limitation requirements of Chapter 4 of these regulations are met.

AUTHORITY NOTE: Promulgated in accordance with R.S. 30:2001 et seq.
HISTORICAL NOTE: Promulgated by the Department of Environmental Quality, Nuclear Energy Division, LR 13:569 (October 1987), amended by the Office of Air Quality and Radiation Protection, Radiation Protection Division, LR 18:34 (January 1992).

§2011. Storage Precautions

A. Each source of radiation, except accelerators, shall be provided with a storage and/or transport container. The container shall be provided with a lock, or tamper seal for calibration sources, to prevent unauthorized removal of, or exposure to, the source of radiation.

B. Sources of radiation shall be stored in a manner that will minimize danger from explosion and/or fire.

AUTHORITY NOTE: Promulgated in accordance with R.S. 30:2001 et seq.
HISTORICAL NOTE: Promulgated by the Department of Environmental Quality, Nuclear Energy Division, LR 13:569 (October 1987), amended by the Office of Air Quality and Radiation Protection, Radiation Protection Division, LR 18:34 (January 1992).

§2012. Transport Precautions

A. Transport containers shall be physically secured to the transporting vehicle to prevent accidental loss, tampering, or unauthorized removal.

AUTHORITY NOTE: Promulgated in accordance with R.S. 30:2001 et seq.
HISTORICAL NOTE: Promulgated by the Department of Environmental Quality, Nuclear Energy Division, LR 13:569 (October 1987), amended by the Office of Air Quality and Radiation Protection, Radiation Protection Division, LR 18:34 (January 1992).

§2013. Radiation Survey Instruments

A. The licensee or registrant shall maintain sufficient calibrated operable radiation survey instruments at each field station and temporary job site to make physical radiation surveys as required by this Chapter and by LAC 33:XV.426 and 430. Instrumentation shall be capable of measuring 0.001 mSv (0.1 mrem) per hour through at least 0.5 mSv (50 mrem) per hour.

B. Each radiation survey instrument shall be calibrated:

1. at intervals not to exceed six months and after each instrument servicing;

2. for linear scale instruments, at two points located approximately 1/3 and 2/3 of full-scale on each scale; for logarithmic scale instruments, at midrange of each decade, and at two points of at least one decade; and for digital instruments, at appropriate points; and

3. so that accuracy within plus or minus 20 percent of the true radiation level can be demonstrated on each scale.

C. Calibration records shall be kept and maintained for a period of two years for inspection by the department.

AUTHORITY NOTE: Promulgated in accordance with R.S. 30:2001 et seq.
HISTORICAL NOTE: Promulgated by the Department of Environmental Quality, Nuclear Energy Division, LR 13:569 (October 1987), amended by the Office of Air Quality and Radiation Protection, Radiation Protection Division, LR 18:34 (January 1992), amended by the Office of Environmental Assessment, Environmental Planning Division, LR 26:2604 (November 2000), LR 26:2771 (December 2000), LR 28:1952 (September 2002).

§2014. Leak Testing of Sealed Sources

A. Requirements. Each licensee using sealed sources of radioactive material shall have the sources tested for leakage. Records of leak test results shall be kept in units of microcuries and maintained for inspection by the department two years after the next required leak test is performed or until transfer or disposal of the sealed source.

B. Method of Testing. Tests for leakage shall be performed only by persons specifically authorized to perform such tests by the Office of Environmental Compliance, Emergency and Radiological Services Division, the U.S. Nuclear Regulatory Commission, an agreement state, or a licensing state. The wipe of a sealed source must be performed using a leak test kit or method approved by the department, the U.S. Nuclear Regulatory Commission, or an agreement state. The test sample shall be taken from the surface of the source, source holder, or from the surface of the device in which the source is stored or mounted and on which one might expect contamination to accumulate. The test sample shall be analyzed for radioactive contamination by a person approved by the department, the U.S. Nuclear Regulatory Commission, or an agreement state to perform the analysis. The analysis shall be capable of detecting the presence of 0.005 microcurie (185 Bq) of radioactive material on the test sample.

C. Interval of Testing

1. Each sealed source of radioactive material, except an energy compensation source (ECS), shall be tested at intervals not to exceed six months. In the absence of a certificate from a transferor indicating that a test has been made prior to the transfer, the sealed source shall not be put into use until tested. If, for any reason, it is suspected that a sealed source may be leaking, it shall be removed from service immediately and tested for leakage as soon as practical.

2. Each ECS that is not exempt from testing in accordance with Subsection E of this Section must be tested at intervals not to exceed three years. In the absence of a certificate from a transferor that a test has been made within the three years before the transfer, the ECS may not be used until tested.

D. Leaking or Contaminated Source. If the test reveals the presence of 0.005 microcurie (185 Bq) or more of leakage or contamination, the licensee shall immediately withdraw the source from use and shall cause it to be decontaminated, repaired, or disposed of in accordance with these regulations. The licensee shall check the equipment associated with the leaking source for radioactive contamination and, if it is contaminated, have it decontaminated or disposed of in accordance with these regulations. A report describing the equipment involved, the test results, any contamination that resulted from the leaking source, and the corrective action taken shall be filed in writing with the Office of Environmental Compliance within five days of receiving the test results or within 30 days of discovery of a leaking or contaminated source.

E. Exemptions. The following sources are exempted from the periodic leak test requirements of LAC 33:XV.2014.A-D:

1. hydrogen-3 (tritium) sources;

2. sources of radioactive material with a half-life of 30 days or less;

3. sealed sources of radioactive material in gaseous form;

4. sources of beta- and/or gamma-emitting radioactive material with an activity of 100 microcuries (3.7 MBq) or less; and

5. sources of alpha- or neutron-emitting radioactive material with an activity of 10 microcuries (0.370 MBq) or less.

AUTHORITY NOTE: Promulgated in accordance with R.S. 30:2001 et seq.

HISTORICAL NOTE: Promulgated by the Department of Environmental Quality, Nuclear Energy Division, LR 13:569 (October 1987), amended by the Office of Air Quality and Radiation Protection, Radiation Protection Division, LR 18:34 (January 1992), amended by the Office of Environmental Assessment, Environmental Planning Division, LR 26:2604 (November 2000), LR 29:1471 (August 2003), LR 30:1667 (August 2004), amended by the Office of the Secretary, Legal Affairs Division, LR 31:2538 (October 2005).

§2015. Quarterly Inventory

A. Each licensee or registrant shall conduct a quarterly physical inventory to account for all sources of radiation. Records of inventories shall be kept and maintained for two years from the date of the inventory for inspection by the department and shall include the quantities and kinds of sources of radiation, the location where sources of radiation are assigned, the date of inventory, and the name of the individual conducting the inventory.

AUTHORITY NOTE: Promulgated in accordance with R.S. 30:2001 et seq.

HISTORICAL NOTE: Promulgated by the Department of Environmental Quality, Nuclear Energy Division, LR 13:569 (October 1987), amended by the Office of Air Quality and Radiation Protection, Radiation Protection Division, LR 18:34 (January 1992), amended by the Office of Environmental Assessment, Environmental Planning Division, LR 26:2605 (November 2000).

§2016. Utilization Records

A. Each licensee or registrant shall maintain current records, which shall be kept available for inspection by the department for two years from the date of the recorded event, showing the following information for each source of radiation:

1. make, model number, and a serial number or a description of each source of radiation used;

2. the identity of the well-logging supervisor or field unit to whom assigned;

3. locations where used and dates of use; and

4. in the case of tracer materials and radioactive markers, the utilization record shall indicate the radionuclide and activity used in a particular well.

AUTHORITY NOTE: Promulgated in accordance with R.S. 30:2001 et seq.

HISTORICAL NOTE: Promulgated by the Department of Environmental Quality, Nuclear Energy Division, LR 13:569 (October 1987), amended by the Office of Air Quality and Radiation Protection, Radiation Protection Division, LR 18:34 (January 1992), amended by the Office of Environmental Assessment, Environmental Planning Division, LR 26:2605 (November 2000).

§2017. Design, Performance, and Certification Criteria for Sealed Sources Used in Downhole Operations

A. Each sealed source, except those containing radioactive material in gaseous form, used in downhole operations and manufactured after October 20, 1988, shall be certified by the manufacturer, or other testing organization acceptable to the Office of Environmental Compliance, Emergency and Radiological Services Division, to meet the following minimum criteria:

1. it must be of doubly encapsulated construction;

2. it must contain licensed radioactive material whose chemical and physical forms are as insoluble and nondispersible as practical; and

3. it must meet the following requirements:

a. for a sealed source manufactured on or before July 14, 1989, the requirements of USASI N5.10-1968, "Classification of Sealed Radioactive Sources," or the requirements in Subsection C or D of this Section; or

b. for a sealed source manufactured after July 14, 1989, the oil well-logging requirements of ANSI/HPS N43.6-1997, "Sealed Radioactive Sources—Classification"; or

c. for a sealed source manufactured after July 14, 1989, the sealed source's prototype has been tested and found to maintain its integrity after each of the following tests:

i. Temperature Test. The test source must be held at −40°C for 20 minutes, 600°C for 1 hour, and then be subjected to a thermal shock test with a temperature drop from 600°C to 20°C within 15 seconds.

ii. Impact Test. A 5 kg steel hammer, 2.5 cm in diameter, must be dropped from a height of 1 m onto the test source.

iii. Vibration Test. The test source must be subjected to a vibration from 25 Hz to 500 Hz at 5 g amplitude for 30 minutes.

iv. Puncture Test. A 1 gram hammer and pin, 0.3 cm pin diameter, must be dropped from a height of 1 m onto the test source.

v. Pressure Test. The test source must be subjected to an external pressure of 1.695×10^7 pascals (24,600 pounds per square inch absolute).

B. For sealed sources, except those containing radioactive material in gaseous form, acquired after October 20, 1988, in the absence of a certificate from a transferor certifying that an individual sealed source meets the requirements of LAC 33:XV.2017.A the sealed source shall not be put into use until such determinations and testing have been performed.

C. Each sealed source, except those containing radioactive material in gaseous form, used in downhole operations after October 20, 1988, shall be certified by the manufacturer, or other testing organization acceptable to the Office of Environmental Compliance, Emergency and Radiological Services Division, as meeting the sealed source performance requirements for oil well-logging as contained in the American National Standard N542, "Sealed Radioactive Sources, Classification," in effect on October 20, 1987.

D. Certification documents shall be kept and maintained for inspection by the Office of Environmental Compliance, Emergency and Radiological Services Division, for a period of two years after source disposal. If the source is abandoned downhole, the certification documents shall be maintained until the Office of Environmental Compliance, Emergency and Radiological Services Division, authorizes disposition in writing.

E. Sealed Source Used in Well-Logging Applications

1. A licensee may use a sealed source in well-logging applications if the sealed source:

a. is doubly encapsulated;

b. contains licensed material whose chemical and physical forms are as insoluble and nondispersible as practical; and

c. meets the following requirements:

i. for a sealed source manufactured on or before July 14, 1989, the requirements of USASI N5.10-1968, "Classification of Sealed Radioactive Sources," or the requirements in Subsection C or D of this Section; or

ii. for a sealed source manufactured after July 14, 1989, the oil well-logging requirements of ANSI/HPS N43.6-1997, "Sealed Radioactive Sources—Classification"; or

iii. for a sealed source manufactured after July 14, 1989, the sealed source's prototype has been tested and found to maintain its integrity after each of the following tests:

(a). Temperature. The test source must be held at −40°C for 20 minutes, 600°C for 1 hour, and then be subjected to a thermal shock test with a temperature drop from 600°C to 20°C within 15 seconds.

(b). Impact Test. A 5 kg steel hammer, 2.5 cm in diameter, must be dropped from a height of 1 m onto the test source.

(c). Vibration Test. The test source must be subjected to a vibration from 25 Hz to 500 Hz at 5 g amplitude for 30 minutes.

(d). Puncture Test. A 1 gram hammer and pin, 0.3 cm pin diameter, must be dropped from a height of 1 m onto the test source.

(e). Pressure Test. The test source must be subjected to an external pressure of 1.695×10^7 pascals (24,600 pounds per square inch absolute).

2. The requirements in Subparagraphs E.1.a-c of this Section do not apply to sealed sources that contain licensed material in gaseous form.

3. The requirements in Subparagraphs E.1.a-c of this Section do not apply to energy compensation sources (ECSs). ECSs must be registered with the U.S. Nuclear Regulatory Commission, an agreement state, or the Office of Environmental Compliance, Emergency and Radiological Services Division.

F. Energy Compensation Source. The licensee may use an energy compensation source (ECS) that is contained within a logging tool, or other tool components, only if the ECS contains quantities of licensed material not exceeding 3.7 MBq (100 microcuries).

1. For well-logging applications with a surface casing for protecting fresh water aquifers, use of the ECS is only

subject to the requirements of LAC 33:XV.2014, 2015, and 2016.

2. For well-logging applications without a surface casing for protecting fresh water aquifers, use of the ECS is only subject to the requirements of Subsection H of this Section and LAC 33:XV.2004, 2014, 2015, 2016, and 2051.

G. Tritium Neutron Generator Target Source

1. Use of a tritium neutron generator target source, containing quantities not exceeding 1,110 MBq (30 curies) and in a well with a surface casing to protect fresh water aquifers, is subject to the requirements of these regulations except Subsections E and F of this Section and LAC 33:XV.2051.

2. Use of a tritium neutron generator target source, containing quantities exceeding 1,110 MBq (30 curies) or in a well without a surface casing to protect fresh water aquifers, is subject to the requirements of these regulations except Subsections E and F of this Section.

H. Use of a Sealed Source in a Well Without a Surface Casing. The licensee may use a sealed source in a well without a surface casing for protecting fresh water aquifers only if the licensee follows a procedure for reducing the probability of the source becoming lodged in the well. The procedure must be approved by the Office of Environmental Compliance, Emergency and Radiological Services Division.

AUTHORITY NOTE: Promulgated in accordance with R.S. 30:2001 et seq.

HISTORICAL NOTE: Promulgated by the Department of Environmental Quality, Nuclear Energy Division, LR 13:569 (October 1987), amended by the Office of Air Quality and Radiation Protection, Radiation Protection Division, LR 18:34 (January 1992), amended by the Office of Environmental Assessment, Environmental Planning Division, LR 26:2605 (November 2000), LR 29:1472 (August 2003), amended by the Office of Environmental Assessment, LR 31:55 (January 2005), amended by the Office of the Secretary, Legal Affairs Division, LR 31:2538 (October 2005).

§2018. Labeling

A. Each source, source holder, or logging tool containing radioactive material shall bear a durable, legible, and clearly visible marking or label, which has, as a minimum, the standard radiation caution symbol without the conventional color requirement, and the following wording:

DANGER (or CAUTION) RADIOACTIVE

This labeling shall be on the smallest component transported as a separate piece of equipment.

B. Each transport container shall have permanently attached to it a durable, legible, and clearly visible label that has, as a minimum, the standard radiation caution symbol and the following wording:

DANGER (or CAUTION) RADIOACTIVE
NOTIFY CIVIL AUTHORITIES (OR NAME OF COMPANY)

AUTHORITY NOTE: Promulgated in accordance with R.S. 30:2001 et seq.

HISTORICAL NOTE: Promulgated by the Department of Environmental Quality, Nuclear Energy Division, LR 13:569 (October 1987), amended by the Office of Air Quality and Radiation Protection, Radiation Protection Division, LR 18:34 (January 1992).

§2019. Inspection and Maintenance

A. Each licensee or registrant shall conduct, at intervals not to exceed six months, a program of inspection and maintenance of source-holders, logging tools, source-handling tools, storage containers, transport containers, and injection tools to assure proper labeling and physical condition. Records of inspection and maintenance shall be kept and maintained for a period of two years for inspection by the department.

B. If any inspection conducted pursuant to LAC 33:XV.2019.A reveals damage to labeling or components critical to radiation safety, the device shall be removed from service until repairs have been made.

C. The repair, opening, or modification of any sealed source shall be performed only by persons specifically authorized to do so by the department, the U.S. Nuclear Regulatory Commission, an agreement state, or a licensing state.

AUTHORITY NOTE: Promulgated in accordance with R.S. 30:2001 et seq.

HISTORICAL NOTE: Promulgated by the Department of Environmental Quality, Nuclear Energy Division, LR 13:569 (October 1987), amended by the Office of Air Quality and Radiation Protection, Radiation Protection Division, LR 18:34 (January 1992), amended by the Office of Environmental Assessment, Environmental Planning Division, LR 26:2605 (November 2000).

Subchapter A. Requirements for Personnel Safety

§2020. Training Requirements

A. No licensee or registrant shall permit any individual to act as a *logging supervisor* as defined in this Chapter until such individual has:

1. received, in a course recognized by the department, the U.S. Nuclear Regulatory Commission, an agreement state, or a licensing state, instruction in the subjects outlined in LAC 33:XV.2099.Appendix A of this Chapter and demonstrated an understanding thereof;

2. read and received instruction in the regulations contained in this Chapter and the applicable sections of Chapters l, 4, and 10 of these regulations or their equivalent, conditions of appropriate license or certificate of registration, and the licensee's or registrant's operating and emergency procedures, and demonstrated an understanding thereof; and

3. demonstrated competence to use sources of radiation, related handling tools, and radiation survey instruments that will be used on the job.

B. No licensee or registrant shall permit any individual to assist in the handling of sources of radiation until such individual has:

1. read or received instruction in the licensee's or registrant's operating and emergency procedures and demonstrated an understanding thereof; and

2. demonstrated competence to use, under the personal supervision of the logging supervisor, the sources of radiation, related handling tools, and radiation survey instruments that will be used on the job.

C. The licensee or registrant shall keep and maintain employee training records for inspection by the department for two years following termination of employment.

AUTHORITY NOTE: Promulgated in accordance with R.S. 30:2001 et seq.
HISTORICAL NOTE: Promulgated by the Department of Environmental Quality, Nuclear Energy Division, LR 13:569 (October 1987), amended by the Office of Air Quality and Radiation Protection, Radiation Protection Division, LR 18:34 (January 1992), amended by the Office of Environmental Assessment, Environmental Planning Division, LR 26:2605 (November 2000).

§2021. Operating and Emergency Procedures

A. The licensee's or registrant's operating and emergency procedures shall include instructions in at least the following:

1. handling and use of sources of radiation to be employed so that no individual is likely to be exposed to radiation doses in excess of the standards established in Chapter 4 of these regulations;

2. methods and occasions for conducting radiation surveys;

3. methods and occasions for locking and securing sources of radiation;

4. personnel monitoring and the use of personnel monitoring equipment;

5. transportation to temporary jobsites and field stations, including the packaging and placing of sources of radiation in vehicles, placarding of vehicles, and securing sources of radiation during transportation;

6. minimizing exposure of individuals in the event of an accident;

7. procedure for notifying proper personnel in the event of an accident;

8. maintenance of records;

9. inspection and maintenance of source holders, logging tools, source-handling tools, storage containers, transport containers, and injection tools;

10. procedure to be followed in the event a sealed source is lodged downhole;

11. procedures to be used for picking up, receiving, and opening packages containing radioactive material;

12. for the use of tracers, decontamination of the environment, equipment, and personnel;

13. maintenance of records generated by logging personnel at temporary jobsites;

14. notifying proper persons in the event of an accident; and

15. actions to be taken if a sealed source is ruptured, including actions to prevent the spread of contamination and minimize inhalation and ingestion of radioactive material and actions to obtain suitable radiation survey instruments as required by LAC 33:XV.2013.

AUTHORITY NOTE: Promulgated in accordance with R.S. 30:2001 et seq.
HISTORICAL NOTE: Promulgated by the Department of Environmental Quality, Nuclear Energy Division, LR 13:569 (October 1987), amended by the Office of Air Quality and Radiation Protection, Radiation Protection Division, LR 18:34 (January 1992).

§2022. Personnel Monitoring

A. No licensee or registrant shall permit any individual to act as a logging supervisor or to assist in the handling of sources of radiation unless each such individual wears a personnel dosimeter. Each personnel dosimeter shall be assigned to and worn by only one individual. Film badges must be replaced at least monthly, and other personnel dosimeters shall be processed at least quarterly. After replacement, each personnel dosimeter must be promptly processed. The processor of a personnel dosimeter shall be accredited by the National Voluntary Laboratory Accreditation Program.

B. Personnel monitoring records shall be maintained for inspection until the Office of Environmental Compliance, Emergency and Radiological Services Division, authorizes disposition.

AUTHORITY NOTE: Promulgated in accordance with R.S. 30:2001 et seq.
HISTORICAL NOTE: Promulgated by the Department of Environmental Quality, Nuclear Energy Division, LR 13:569 (October 1987), amended by the Office of Air Quality and Radiation Protection, Radiation Protection Division, LR 18:34 (January 1992), amended by the Office of Environmental Assessment, Environmental Planning Division, LR 26:2605 (November 2000), LR 29:1472 (August 2003), amended by the Office of the Secretary, Legal Affairs Division, LR 31:2539 (October 2005).

Subchapter B. Precautionary Procedures in Logging and Subsurface Tracer Operations

§2031. Security

A. A logging supervisor must be physically present at a temporary job site whenever licensed materials are being handled or are not stored and locked in a vehicle or storage place. The logging supervisor may leave the job site in order to obtain assistance if a source becomes lodged in a well.

B. During each logging or tracer application, the logging supervisor or other designated employee shall maintain direct surveillance of the operation to protect against unauthorized and/or unnecessary entry into a *restricted area*, as defined in Chapter 1 of these regulations.

AUTHORITY NOTE: Promulgated in accordance with R.S. 30:2001 et seq.
HISTORICAL NOTE: Promulgated by the Department of Environmental Quality, Nuclear Energy Division, LR 13:569 (October 1987), amended by the Office of Air Quality and Radiation Protection, Radiation Protection Division, LR 18:34 (January 1992), amended by the Office of Environmental Assessment, Environmental Planning Division, LR 26:2771 (December 2000).

§2032. Handling Tools

A. The licensee shall provide and require the use of tools that will assure remote handling of sealed sources other than low-activity calibration sources.

AUTHORITY NOTE: Promulgated in accordance with R.S. 30:2001 et seq.
HISTORICAL NOTE: Promulgated by the Department of Environmental Quality, Nuclear Energy Division, LR 13:569 (October 1987), amended by the Office of Air Quality and Radiation Protection, Radiation Protection Division, LR 18:34 (January 1992).

§2033. Subsurface Tracer Studies

A. Protective gloves and other appropriate protective clothing and equipment shall be used by all personnel handling radioactive tracer material. Precautions shall be taken to avoid ingestion or inhalation of radioactive material.

B. No licensee shall cause the injection of radioactive material into potable aquifers without prior written authorization from the department and any other appropriate state agency.

AUTHORITY NOTE: Promulgated in accordance with R.S. 30:2001 et seq.
HISTORICAL NOTE: Promulgated by the Department of Environmental Quality, Nuclear Energy Division, LR 13:569 (October 1987), amended by the Office of Air Quality and Radiation Protection, Radiation Protection Division, LR 18:34 (January 1992), amended by the Office of Environmental Assessment, Environmental Planning Division, LR 26:2606 (November 2000).

§2034. Particle Accelerators

A. No licensee or registrant shall permit aboveground testing of particle accelerators designed for use in well-logging that results in the production of radiation, except in areas or facilities controlled or shielded so that the requirements of LAC 33:XV.410 and 415, as applicable, are met.

AUTHORITY NOTE: Promulgated in accordance with R.S. 30:2001 et seq.
HISTORICAL NOTE: Promulgated by the Department of Environmental Quality, Nuclear Energy Division, LR 13:569 (October 1987), amended by the Office of Air Quality and Radiation Protection, Radiation Protection Division, LR 18:34 (January 1992).

§2036. Uranium Sinker Bars

A. The licensee may use a uranium sinker bar in well-logging applications only if it is legibly impressed with the words "CAUTION—RADIOACTIVE DEPLETED URANIUM" and "NOTIFY CIVIL AUTHORITIES [or COMPANY NAME] IF FOUND."

AUTHORITY NOTE: Promulgated in accordance with R.S. 30:2001 et seq.
HISTORICAL NOTE: Promulgated by the Department of Environmental Quality, Office of Environmental Assessment, Environmental Planning Division, LR 29:1473 (August 2003).

Subchapter C. Radiation Surveys and Records

§2041. Radiation Surveys

A. Radiation surveys or calculations shall be made and recorded for each area where radioactive materials are stored.

B. Radiation surveys shall be made and recorded for the radiation levels in occupied positions and on the exterior of each vehicle used to transport radioactive material. Such surveys shall include each source of radiation or combination of sources to be transported in the vehicle.

C. After removal of the sealed source from the logging tool and before departing the jobsite, the logging tool detector shall be energized, or a survey meter used, to assure that the logging tool is free of contamination.

D. Radiation surveys shall be made and recorded at the jobsite or wellhead for each tracer operation, except those using hydrogen-3, carbon-14, and sulfur-35. These surveys shall include measurements of radiation levels before and after the operation.

E. Records required pursuant to LAC 33:XV.2041.A-D shall include the dates, the identification of individual(s) making the survey, the identification of survey instrument(s) used, and an exact description of the location of the survey. Records of these surveys shall be kept and maintained for inspection by the department for two years after completion of the survey.

AUTHORITY NOTE: Promulgated in accordance with R.S. 30:2001 et seq.
HISTORICAL NOTE: Promulgated by the Department of Environmental Quality, Nuclear Energy Division, LR 13:569 (October 1987), amended by the Office of Air Quality and Radiation Protection, Radiation Protection Division, LR 18:34 (January 1992), amended by the Office of Environmental Assessment, Environmental Planning Division, LR 26:2606 (November 2000).

§2042. Documents and Records Required at Field Stations

A. Each licensee or registrant shall keep and maintain, for inspection by the department, the following documents and records for the specific devices and sources used at the field station:

1. appropriate license, certificate of registration, or equivalent document;

2. operating and emergency procedures;

3. applicable regulations;

4. records of the latest survey instrument calibrations pursuant to LAC 33:XV.2013;

5. records of the latest leak test results pursuant to LAC 33:XV.2014;

6. quarterly inventories required pursuant to LAC 33:XV.2015;

7. utilization records required pursuant to LAC 33:XV.2016;

8. records of inspection and maintenance required pursuant to LAC 33:XV.2019;

9. survey records required pursuant to LAC 33:XV.2041; and

10. training records required pursuant to LAC 33:XV.2020.

AUTHORITY NOTE: Promulgated in accordance with R.S. 30:2001 et seq.

HISTORICAL NOTE: Promulgated by the Department of Environmental Quality, Nuclear Energy Division, LR 13:569 (October 1987), amended by the Office of Air Quality and Radiation Protection, Radiation Protection Division, LR 18:34 (January 1992), amended by the Office of Environmental Assessment, Environmental Planning Division, LR 26:2606 (November 2000).

§2043. Documents and Records Required at Temporary Jobsites

A. Each licensee or registrant conducting operations at a temporary jobsite shall have the following documents and records available at that site for inspection by the department:

1. operating and emergency procedures;

2. survey records required pursuant to LAC 33:XV.2010 for the period of operation at the site;

3. evidence of current calibration for the radiation survey instruments in use at the site;

4. when operating in the state under reciprocity, a copy of the appropriate license, certificate of registration, or equivalent document(s); and

5. shipping papers for the transportation of radioactive material.

AUTHORITY NOTE: Promulgated in accordance with R.S. 30:2001 et seq.

HISTORICAL NOTE: Promulgated by the Department of Environmental Quality, Nuclear Energy Division, LR 13:569 (October 1987), amended by the Office of Air Quality and Radiation Protection, Radiation Protection Division, LR 18:34 (January 1992), amended by the Office of Environmental Assessment, Environmental Planning Division, LR 26:2606 (November 2000).

Subchapter D. Notification

§2051. Notification of Incidents, Abandonment, and Lost Sources

A. The licensee shall immediately notify the Office of Environmental Compliance by telephone at (225) 765-0160 in the manner provided in LAC 33:I.3923 and subsequently within 30 days by confirmatory report using the procedures provided in LAC 33:I.3925.B and C if the licensee knows or has reason to believe that a sealed source has been ruptured. The report must designate the well or other location, describe the magnitude and extent of the release of licensed materials, assess the consequences of the rupture, and explain efforts planned or being taken to mitigate these consequences.

B. Whenever a sealed source or device containing radioactive material is lodged downhole, the licensee shall:

1. monitor at the surface for the presence of radioactive contamination with a radiation survey instrument or logging tool during logging tool recovery operations; and

2. notify the Office of Environmental Compliance immediately by telephone at (225) 765-0160 in the manner provided in LAC 33:I.3923 if radioactive contamination is detected at the surface or if the source appears to be damaged, and provide a follow-up written report to the Office of Environmental Compliance using the procedures provided in LAC 33:I.3925.B and C within 30 days of detection.

C. When it becomes apparent that efforts to recover the radioactive source will not be successful, the licensee shall:

1. advise the well operator of the regulations of the appropriate state agency regarding abandonment and an appropriate method of abandonment, which shall include:

a. the immobilization and sealing in place of the radioactive source with a cement plug;

b. the setting of a whipstock or other deflection device; and

c. the mounting of a permanent identification plaque, at the surface of the well, containing the appropriate information required by LAC 33:XV.2051.D;

2. notify the Office of Environmental Compliance by telephone at (225) 765-0160 in the manner provided in LAC 33:I.3923 giving the circumstances of the loss, and request approval of the proposed abandonment procedures; and

3. file a written report with the Office of Environmental Compliance using the procedures provided in LAC 33:I.3925.B and C within 30 days of the abandonment, setting forth the following information:

a. date of occurrence and a brief description of attempts to recover the source;

b. a description of the radioactive source involved, including radionuclide, quantity, and chemical and physical form;

c. surface location and identification of well;

d. results of efforts to immobilize and seal the source in place;

e. depth of the radioactive source;

f. depth of the top of the cement plug;

g. depth of the well;

h. information contained on the permanent identification plaque;

i. the names of state agencies receiving a copy of this report; and

j. the immediate threat to public health and safety justification for implementing abandonment if prior Office of Environmental Compliance approval was not obtained because the licensee believed there was an immediate threat to public health and safety.

D. Whenever a sealed source containing radioactive material is abandoned downhole, the licensee shall provide a means to prevent inadvertent intrusion on the source, unless the source is not accessible to any subsequent drilling operations, and a permanent plaque (see LAC 33:XV.2099.Appendix B) for posting the well or well-bore. This plaque shall:

1. be constructed of long-lasting material, such as stainless steel or monel; and

2. contain the following information engraved on its face:

a. the word "CAUTION";

b. the radiation symbol without the conventional color requirement;

c. the date of abandonment;

d. the well name and well identification number(s) or other designation;

e. the sealed source(s) by radionuclide and quantity of activity;

f. the source depth and the depth to the top of the plug; and

g. an appropriate warning, depending on the specific circumstances of each abandonment. Appropriate warnings may include "DO NOT DRILL BELOW PLUG BACK DEPTH"; "DO NOT ENLARGE CASING"; or "DO NOT RE-ENTER THE HOLE," followed by the words, "BEFORE CONTACTING THE OFFICE OF ENVIRONMENTAL COMPLIANCE, LOUISIANA DEPARTMENT OF ENVIRONMENTAL QUALITY."

E. The licensee shall notify the Office of Environmental Compliance of the theft or loss of radioactive materials, radiation overexposure, excessive levels and concentrations of radiation or radioactive materials, and certain other accidents as required by LAC 33:XV.341, 485, 486, and 487.

AUTHORITY NOTE: Promulgated in accordance with R.S. 30:2001 et seq.

HISTORICAL NOTE: Promulgated by the Department of Environmental Quality, Nuclear Energy Division, LR 13:569 (October 1987), amended by the Office of Air Quality and Radiation Protection, Radiation Protection Division, LR 18:34 (January 1992), LR 21:555 (June 1995), amended by the Office of Environmental Assessment, Environmental Planning Division, LR 26:2606 (November 2000), LR 29:1473 (August 2003), LR 30:1679 (August 2004).

§2099. Appendices A and B

Appendix A

Subjects to be Included in Training Courses for Logging Supervisors

I. Fundamentals of Radiation Safety

A. Characteristics of radiation

B. Units of radiation dose and quantity of radioactivity

C. Significance of radiation dose

1. Radiation protection standards

2. Biological effects of radiation dose

D. Levels of radiation from sources of radiation

E. Methods of minimizing radiation dose

1. Working time

2. Working distances

3. Shielding

F. Radiation safety practices including prevention of contamination and methods of decontamination

II. Radiation Detection Instrumentation to Be Used

A. Use of radiation survey instruments

1. Operation

2. Calibration

3. Limitations

B. Survey techniques

C. Use of personnel-monitoring equipment

III. Equipment to Be Used

A. Handling equipment

B. Sources of radiation

C. Storage and control of equipment

D. Operation and control of equipment

IV. The Requirements of Pertinent Federal and State Regulations

V. The Licensee's or Registrant's Written Operating and Emergency Procedures

VI. The Licensee's or Registrant's Recordkeeping Procedures

Appendix B

Example of Plaque for Identifying Wells Containing Sealed Sources of Radioactive Material Abandoned Downhole

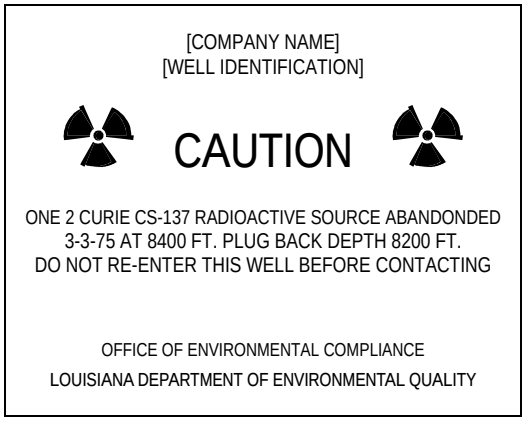

The size of the plaque should be convenient for use on active or inactive wells, e.g., a 7-inch square that is 3 mm (1/8-inch) thick. Letter size of the word "CAUTION" should be approximately twice the letter size of the rest of the information, e.g., 1/2-inch and 1/4-inch letter sizes, respectively.

AUTHORITY NOTE: Promulgated in accordance with R.S. 30:2001 et seq.

HISTORICAL NOTE: Promulgated by the Department of Environmental Quality, Nuclear Energy Division, LR 13:569 (October 1987), amended by the Office of Air Quality and Radiation Protection, Radiation Protection Division, LR 18:34 (January 1992), amended by the Office of Environmental Assessment, Environmental Planning Division, LR 26:2607 (November 2000), LR 29:1473 (August 2003).

Chapter 25. Fee Schedule

§2501. Scope and Purpose

A. It is the purpose of these regulations to establish a fee system for funding the monitoring, investigation, and other activities required to be conducted for the maintenance of a safe and healthful environment by the Department of Environmental Quality in accordance with the Louisiana Environmental Quality Act (R.S. 30:2101 et seq.). Fees are required for all permits, licenses, registrations, and variances authorized by the Act.

AUTHORITY NOTE: Promulgated in accordance with R.S. 30:2001 et seq.

HISTORICAL NOTE: Promulgated by the Department of Environmental Quality, Office of Air Quality and Nuclear Energy, LR 10:1013 (December 1984), amended by the Nuclear Energy Division, LR 13:569 (October 1987), amended by the Office of Air Quality and Radiation Protection, Radiation Protection Division, LR 18:718 (July 1992).

§2502. Authority

A. These regulations provide fees as required by R.S. 30:2014(B), R.S. 30:2106, and R.S. 30:2115.

AUTHORITY NOTE: Promulgated in accordance with R.S. 30:2001 et seq.

HISTORICAL NOTE: Promulgated by the Department of Environmental Quality, Office of Air Quality and Nuclear, LR 10:1013 (December 1984), amended by the Nuclear Energy Division, LR 13:569 (October 1987), amended by the Office of Air Quality and Radiation Protection, Radiation Protection Division, LR 18:718 (July 1992).

§2503. Definitions

A. All terms used in these rules, unless the context otherwise requires or unless specifically defined in the Louisiana Environmental Quality Act, or in other regulations promulgated by the administrative authority or his or her predecessor, shall have their usual meanings.

AUTHORITY NOTE: Promulgated in accordance with R.S. 30:2001 et seq.

HISTORICAL NOTE: Promulgated by the Department of Environmental Quality, Office of Air Quality and Nuclear Energy, LR 10:1013 (December 1984), amended by the Nuclear Energy Division, LR 13:569 (October 1987), amended by the Office of Air Quality and Radiation Protection, Radiation Protection Division, LR 18:718 (July 1992).

§2504. Application Fees

A. Each application or amendment thereto for which a fee is prescribed shall be accompanied by a remittance in the full amount of the fee. No application or amendment thereto shall be accepted or processed prior to payment of the full amount specified. No permit, license, registration, or variance shall be issued, unless otherwise authorized by the administrative authority, until such check or draft has been accepted by the bank or drawee and the department's account has been credited with the amount of the fee in full.

B. Payment of the prescribed annual fee does not automatically renew the license, certificate, registration, or approval for which the fee is paid. License renewal applications must be filed in accordance with LAC 33:XV.333.A.

AUTHORITY NOTE: Promulgated in accordance with R.S. 30:2001 et seq.

HISTORICAL NOTE: Promulgated by the Department of Environmental Quality, Office of Air Quality and Nuclear Energy, LR 10:1013 (December 1984), amended by the Nuclear Energy Division, LR 13:569 (October 1987), amended by the Office of Air Quality and Radiation Protection, Radiation Protection Division, LR 18:718 (July 1992), amended by the Office of Environmental Assessment, Environmental Planning Division, LR 29:1816 (September 2003).

§2505. Annual Fees

A. All activities for which an annual fee is provided shall be subject to the payment of such fee by the due date indicated on the invoice, except that any fee in excess of $50,000, upon written application to, and approval of, the administrative authority, may be paid in installments over a period not to exceed six months, according to a payment schedule established by the administrative authority.

AUTHORITY NOTE: Promulgated in accordance with R.S. 30:2001 et seq.

HISTORICAL NOTE: Promulgated by the Department of Environmental Quality, Office of Air Quality and Nuclear Energy, LR 10:1013 (December 1984), amended by the Nuclear Energy Division, LR 11:530 (May 1985), LR 13:569 (October 1987), amended by the Office of Air Quality and Radiation Protection, Radiation Protection Division, LR 18:718 (July 1992), amended by

the Office of Management and Finance, Fiscal Services Division, LR 22:19 (January 1996), amended by the Office of Environmental Assessment, Environmental Planning Division, LR 26:2607 (November 2000).

§2506. Reciprocal Agreements—Licenses and Registrants

A. Persons operating within Louisiana under the provisions of LAC 33:XV.212 or LAC 33:XV.390 shall submit to the Office of Environmental Compliance, Emergency and Radiological Services Division, the annual fee of the applicable category before the first entry into the state. The fee will allow reciprocal recognition of the license or registration for one year from the date of receipt.

AUTHORITY NOTE: Promulgated in accordance with R.S. 30:2001 et seq.

HISTORICAL NOTE: Promulgated by the Department of Environmental Quality, Office of Air Quality and Nuclear Energy, LR 10:1013 (December 1984), amended by the Nuclear Energy Division, LR 13:569 (October 1987), amended by the Office of Air Quality and Radiation Protection, Radiation Protection Division, LR 18:718 (July 1992), amended by the Office of Environmental Assessment, Environmental Planning Division, LR 26:2607 (November 2000), LR 29:1816 (September 2003), amended by the Office of the Secretary, Legal Affairs Division, LR 31:2539 (October 2005).

§2507. Reimbursements

A. One-half of the annual fee will be reimbursed to the licensee or registrant upon receipt of a written request to terminate the license or registration, provided that the request has been received by the Office of Environmental Compliance, Emergency and Radiological Services Division, within 180 days after the annual fee due date, and the fee has not been delinquent. Requests for termination of the license or registration received after 180 days of the annual fee due date will not entitle the licensee or registrant to reimbursement of any portion of the annual fee. No interest, legal or otherwise, will be paid on the funds withheld prior to reimbursement.

B. One-half of the application fee will be reimbursed to the licensee or registrant upon receipt of a written request from the applicant to withdraw an application prior to final approval. In the case of the denial of an application, for whatever reason, one half of the application fee will be refunded. No interest, legal or otherwise, will be paid on the funds withheld prior to reimbursement.

AUTHORITY NOTE: Promulgated in accordance with R.S. 30:2001 et seq.

HISTORICAL NOTE: Promulgated by the Department of Environmental Quality, Office of Air Quality and Nuclear Energy, LR 10:1013 (December 1984), amended by the Nuclear Energy Division, LR 13:569 (October 1987), amended by the Office of Air Quality and Radiation Protection, Radiation Protection Division, LR 18:718 (July 1992), amended by the Office of Environmental Assessment, Environmental Planning Division, LR 26:2607 (November 2000), amended by the Office of the Secretary, Legal Affairs Division, LR 31:2539 (October 2005).

§2508. Determination of Fee

A. The fee for each applicable category is listed in LAC 33:XV.2599.Appendix A.

B. In the case of licenses that authorize more than one activity, the total fee will be for the activity assigned the higher fee.

C. Licenses that are amended and that result in a change in the LAC 33:XV.2599.Appendix A category to a more costly license shall be assessed the entire fee for that type of license effective with the amendment without regard to any fees already paid.

D. Electronic products that are in storage are subject to the same initial application fee and annual maintenance fee unless the X-ray unit is rendered permanently incapable of producing radiation and this fact is documented in writing to the Office of Environmental Compliance, Emergency and Radiological Services Division.

E. Electronic products that are no longer possessed by the registrant (e.g., sold, donated, or transferred) shall not be subject to the annual maintenance fee, provided written documentation is received by the invoice due date, which includes the name, address, and telephone number to whom possession was transferred.

AUTHORITY NOTE: Promulgated in accordance with R.S. 30:2001 et seq.

HISTORICAL NOTE: Promulgated by the Department of Environmental Quality, Office of Air Quality and Nuclear Energy, LR 10:1013 (December 1984), amended by the Nuclear Energy Division, LR 13:569 (October 1987), amended by the Office of Air Quality and Radiation Protection, Radiation Protection Division, LR 18:718 (July 1992), amended by the Office of Environmental Assessment, Environmental Planning Division, LR 26:1441 (July 2000), LR 26:2607 (November 2000), amended by the Office of the Secretary, Legal Affairs Division, LR 31:2539 (October 2005).

§2509. Method of Payment

A. Fee payment shall be made by check, draft or money order payable to the Department of Environmental Quality and mailed to the department at the address provided on the invoice.

AUTHORITY NOTE: Promulgated in accordance with R.S. 30:2001 et seq.

HISTORICAL NOTE: Promulgated by the Department of Environmental Quality, Office of Air Quality and Nuclear Energy, LR 10:1013 (December 1984), amended by the Nuclear Energy Division, LR 13:569 (October 1987), amended by the Office of Air Quality and Radiation Protection, Radiation Protection Division, LR 18:719 (July 1992), amended by the Office of Management and Finance, Fiscal Services Division, LR 22:19 (January 1996).

§2510. Late Payment Fee

A. Payments not received within 15 days of the due date will be charged a late payment fee. Any late payment fee shall be calculated from the due date indicated on the invoice.

1. Payments not received by the department by the fifteenth day from the due date will be assessed a 5 percent late payment fee on the original assessed fee.

2. Payments not received by the department by the thirtieth day from the due date will be assessed an additional 5 percent late payment fee on the original assessed fee.

3. Payments not received by the department by the sixtieth day from the due date will be assessed an additional 5 percent late payment fee on the original assessed fee.

AUTHORITY NOTE: Promulgated in accordance with R.S. 30:2001 et seq.

HISTORICAL NOTE: Promulgated by the Department of Environmental Quality, Office of Air Quality and Nuclear Energy, LR 10:1013 (December 1984), amended by the Nuclear Energy Division, LR 13:569 (October 1987), amended by the Office of Air Quality and Radiation Protection, Radiation Protection Division, LR 18:719 (July 1992), amended LR 21:791 (August 1995), amended by the Office of Management and Finance, Fiscal Services Division, LR 25:428 (March 1999).

§2511. Failure to Pay

A. Failure to pay the prescribed application fee or annual fee as provided herein, within 90 days after the due date, will constitute a violation of these regulations and shall subject the person to applicable enforcement actions under the act including, but not limited to, revocation or suspension of the applicable permit, license, registration, or variance.

AUTHORITY NOTE: Promulgated in accordance with R.S. 30:2001 et seq.

HISTORICAL NOTE: Promulgated by the Department of Environmental Quality, Office of Air Quality and Nuclear Energy, LR 10:1013 (December 1984), amended by the Nuclear Energy Division, LR 13:569 (October 1987), amended by the Office of Air Quality and Radiation Protection, Radiation Protection Division, LR 18:719 (July 1992), amended by the Office of Management and Finance, Fiscal Services Division, LR 22:19 (January 1996), LR 25:428 (March 1999).

§2512. Effective Date

A. The fees prescribed herein shall be effective on August 20, 1995 or upon publication in the *Louisiana Register* as adopted.

AUTHORITY NOTE: Promulgated in accordance with R.S. 30:2001 et seq.

HISTORICAL NOTE: Promulgated by the Department of Environmental Quality, Office of Air Quality and Nuclear Energy, LR 10:1014 (December 1984), amended by the Nuclear Energy Division, LR 11:530 (May 1985), LR 12:674 (October 1986), LR 13:569 (October 1987), amended by the Office of Air Quality and Radiation Protection, Radiation Protection Division, LR 18:719 (July 1992), amended LR 21:792 (August 1995).

§2513. Multiple Locations

A. Those persons possessing licenses or registrations that name multiple locations where sources of radiation are stored, used, or otherwise possessed, shall be subject to an additional fee of 10 percent of the annual maintenance fee for each such location within the state of Louisiana, not to exceed an amount equal to the annual maintenance fee.

AUTHORITY NOTE: Promulgated in accordance with R.S. 30:2001 et seq.

HISTORICAL NOTE: Promulgated by the Department of Environmental Quality, Office of Air Quality and Nuclear Energy, LR 10:1013 (December 1984), amended by the Nuclear Energy Division, LR 13:569 (October 1987), amended by the Office of Air Quality and Radiation Protection, Radiation Protection Division, LR 21:792 (August 1995).

§2599. Appendix A

Appendix A Radiation Protection Program Fee Schedule		
	Application Fee	**Annual Maintenance Fee**
I. Radioactive Material Licensing		
A. Medical licenses:		
1. Therapy:		
a. Teletherapy	733	733
b. Brachytherapy	733	733
2. Nuclear medicine diagnostic only	904	904
3. Nuclear medicine diagnostic/therapy	970	970
4. Nuclear pacemaker implantation	363	363
5. Eye applicators	363	363
6. In-vitro studies or radioimmunoassays or calibration sources	363	363
7. Processing or manufacturing and distribution of radiopharmaceuticals	1,426	1,214
8. Mobile nuclear medicine services	1,426	1,214
9. "Broad scope" medical licenses	1,426	1,214
10. Manufacturing of medical devices/sources	1,663	1,386
11. Distribution of medical devices/sources	1,247	1,036
12. All other medical licenses	403	403
B. Source material licenses:		
1. For mining, milling, or processing activities, or utilization which results in concentration or redistribution of naturally occurring radioactive material	7,207	7,207
2. For the concentration and recovery of uranium from phosphoric acid as "yellow cake" (powered solid)	3,604	3,604
3. For the concentration of uranium from or in phosphoric acid	1,802	1,802
4. All other specific "source material" licenses	363	363
C. Special nuclear material (SNM) licenses:		
1. For use of SNM in sealed sources contained in devices used in measuring systems	554	554
2. SNM used as calibration or reference sources	363	363
3. All other licenses or use of SNM in quantities not sufficient to form a critical mass, except as in I.A.4, I.C.1, and 2	363	363
D. Industrial radioactive material licenses:		
1. For processing or manufacturing for commercial distribution	7,128	5,366
2. For industrial radiography operations performed in a shielded radiography installation(s) or permanently designated areas at the address listed in the license	1,214	957
3. For industrial radiography operations performed at temporary jobsite(s) of the licensee	3,577	2,693
4. For possession and use of radioactive materials in sealed sources for irradiation of materials where the source is not removed from the shield and is less than 10,000 curies	1,802	904
5. For possession and use of radioactive materials in sealed sources for irradiation of materials when the source is not removed from the shield and is greater than 10,000 curies, or where the source is removed from the shield	3,577	1,789
6. For distribution of items containing radioactive material	1,802	1,802
7. Well-logging and subsurface tracer studies:		
a. Collar markers, nails, etc. for orientation	363	363
b. Sealed sources less than 10 curies and/or tracers less than or equal to 500 mCi	1,076	1,076
c. Sealed sources of 10 curies or greater and/or tracers greater than 500 mCi but less than 5 curies	1,802	1,802
d. Field flood studies and/or tracers equal to or greater than 5 curies	2,706	2,706
8. Operation of a nuclear laundry	7,141	3,577
9. Industrial research and development of radioactive materials or products containing radioactive materials	904	904
10. Academic research and/or instruction	733	733
11. Licenses of broad scope:		
a. Academic, industrial, research and development, total activity equal to or greater than 1 curie	1,802	1,802
b. Academic, industrial, research and development, total activity less than 1 curie	1,076	1,076
12. Gas chromatographs, sulfur analyzers, lead analyzers, or similar laboratory devices	363	363
13. Calibration sources equal to or less than 1 curie per source	363	363
14. Level or density gauges	554	554

Appendix A Radiation Protection Program Fee Schedule		
	Application Fee	**Annual Maintenance Fee**
15. Pipe wall thickness gauges	733	733
16. Soil moisture and density gauges	554	554
17. NORM decontamination/maintenance:		
a. at permanently designated areas at the location(s) listed in the license	4,158	3,465
b. at temporary jobsite(s) of the licensee	4,158	4,158
18. Commercial NORM storage	3,465	3,465
19. All other specific industrial licenses except as otherwise noted	733	733
20. Commercial NORM treatment	16,632	13,860
E. Radioactive waste disposal licenses:		
1. Commercial waste disposal involving burial	935,550	935,550
2. Commercial waste disposal involving incineration of vials containing liquid scintillation fluids	7,128	3,577
3. All other commercial waste disposal involving storage, packaging and/or transfer	3,577	3,577
F. Civil defense licenses	436	363
G. Teletherapy service company license	1,802	1,802
H. Consultant licenses:		
1. No calibration sources	178	103
2. Possession of calibration sources equal to or less than 500 mCi each	264	178
3. Possession of calibration sources greater than 500 mCi	363	264
4. Installation and/or servicing of medical afterloaders	482	416
II. Electronic Product Registration		
1. Medical diagnostic X-ray (per registration)	117	117
2. Medical therapeutic X-ray (per registration):		
a. below 500 kVp	277	277
b. 500 kVp to 1 MeV (including accelerator and Van deGraaf)	554	554
c. 1 MeV to 10 MeV	832	832
d. 10 MeV or greater	1,109	1,109
3. Dental X-ray (per registration)	104	96
4. Veterinary X-ray (per registration)	104	104
5. Educational institution X-ray (teaching unit, per registration)	172	104
6. Industrial accelerator (includes Van de Graaf machines and neutron generators)	554	554
7. Industrial radiography (per registration)	277	277
8. All other X-ray (per registration) except as otherwise noted	125	125
III. General Licenses		
A. NORM (Wellhead fee per field shall not exceed $2,079 per operator. Operators reporting contamination by field will be invoiced for all wellheads in the field. Operators reporting contamination by wellhead will be invoiced only for contaminated units.)		
1. 1-5 contaminated wellheads	139	139
2. 6-20 contaminated wellheads	693	693
3. >20 contaminated wellheads	2,079	2,079
4. Stripper wells-contaminated ($693 maximum for strippers per field):	139	139
a. 1-5 contaminated stripper wells	139	139
b. > 5 contaminated stripper wells	693	693
5. NORM locations (other than fields):		
a. gas plants, pipeyards, chemical plant, refinery	416	416
b. warehouses, pipeline, manufacturing plant, NORM equipment storage site, etc.	416	416
6. Interim container storage per NORM Waste Management Plan of an approved location		1,386
7. NORM location as otherwise defined in LAC 33:XV.1403 and not exempted by LAC 33:XV.1404, not included in III.A.1-6 of this Appendix	139	139
B. Tritium sign	99	0
C. All other general licenses which require registration	139	139
IV. Reciprocal Recognition		
The fee for reciprocal recognition of a license or registration from another state or the NRC is the annual fee of the applicable category. The fee covers activities in the state of Louisiana for one year from the date of receipt.		
V. Shielding Evaluation (per room)		
A. Diagnostic	139	*
B. Therapeutic (below 500 kVp)	209	*
C. Therapeutic (500 kVp to 1 MeV)	343	*
D. Therapeutic (1 MeV to 10 MeV)	482	*
E. Therapeutic (10 MeV or greater)	1,043	*
F. Industrial and industrial radiography	482	*

Appendix A Radiation Protection Program Fee Schedule		
	Application Fee	**Annual Maintenance Fee**
VI. Device, Product, or Sealed Source Evaluation		
A. Device evaluation (each)	970	*
B. Sealed source design evaluation (each)	627	*
C. Update sheet	209	*
VII. Testing		
Testing to determine qualifications of employees, per test administered	178	*
VIII. Nuclear Electric Generating Station		
Located in Louisiana		393,360
Located near Louisiana (Plume Exposure Pathway Emergency Planning Zone - includes area in Louisiana)		285,120
Uranium Enrichment Facility		69,300
IX. La. Radiation Protection Program Laboratory Analysis Fees		
Sample Type	**Analysis**	**Unit Price**
A. Air filters:		
1. Particulate	Gross beta	77
2. Charcoal cartridge	Gamma	218
	Gamma/I-131	218
B. Milk	Gamma	231
	I-131	250
C. Water	Gamma	250
	I-131	250
	H-3	92
D. Sediment	Gamma	264
E. Vegetation	Gamma	250
F. Fish	Gamma	264
G. Leak test	Gamma	218
	H-3	92
H. NORM sample:		
1. Soil	Gamma	231
2. Produced water	Gamma	250
* Fees are charged one time		

AUTHORITY NOTE: Promulgated in accordance with R.S. 30:2001 et seq.

HISTORICAL NOTE: Promulgated by the Department of Environmental Quality, Office of Air Quality and Nuclear Energy, LR 10:1014 (December 1984), amended by the Nuclear Energy Division, LR 11:530 (May 1985), LR 12:674 (October 1986), LR 13:569 (October 1987), LR 14:622 (September 1988), LR 15:737 (September 1989), amended by the Office of Air Quality and Radiation Protection, Radiation Protection Division, LR 18:719 (July 1992), repromulgated LR 18:955 (September 1992), amended LR 19:624 (May 1993), LR 21:792 (August 1995), repromulgated LR 21:944 (September 1995), amended by the Office of Environmental Assessment, Environmental Planning Division, LR 26:2607 (November 2000), LR 29:691 (May 2003), LR 29:2053 (October 2003).